MAIN STORE IMAGE & BRANDING PROJECT

TM

EXCHANGE

You save, we give back.

FORT MYER
JBMHH-MYER, ARLINGTON, VIRGINIA
PROJECT #0330-10-000001

04.11.12 - ISSUED FOR BID

DATES AND REVISIONS	
No.	Date/Description
	04.11.12 – BID

EXCHANGE™

RICHARD L. BOWEN
+ ASSOCIATES INC.
13000 Shaker Boulevard / Cleveland, Ohio 44120
Phone: (216) 491-9300 Fax: (216) 491-9053
www.rlba.com - email@rlba.com

FT. MYER EXCHANGE
JBMHH - MYER
ARLINGTON, VIRGINIA

TITLE SHEET

DRAWN BY: RTV
CHECKED BY: -
RLB NO.: 7800.02

DRAWING NO.
T1.0

P:\7800\7800.02 FT. MYER PX IMAGE UPGRADE CONST. CONTRACT DOCS\ARCH\780202_T01-00.DWG | PLOTTED 04.09.2012 10:13AM BY ANDREW HENLEY

ABBREVIATIONS

&	AND	ID	INSIDE DIAMETER
L	ANGLE	INSUL	INSULATION
@	AT	INT	INTERIOR
X	BY	INTERMED	INTERMEDIATE
#	NUMBER	INV	INVERT
		IRWC	IMPACT RESISTANT WALLCOVERING
A/C	AIR CONDITIONER(ER) (ING)		
AB	ANCHOR BOLT	JAN	JANITOR
ACOUST	ACOUSTICAL	JB	JUNCTION BOX
ACT	ACOUSTICAL CEILING TILE	JT	JOINT
ADJ	ADJUSTABLE		
AFF	ABOVE FINISHED FLOOR	LAM	LAMINATED
ALT	ALTERNATE	LAV	LAVATORY
ALUM	ALUMINUM	LF	LINEAR FEET
APPROX	APPROXIMATELY	LIN	LINOLEUM
ARCH	ARCHITECTURAL	LLH	LONG LEG HORIZONTAL
		LLV	LONG LEG VERTICAL
BLDG	BUILDING		
BLKG	BLOCKING	M	MIRROR
BM	BEAM	MAINT	MAINTENANCE
BR	BRICK	MATL	MATERIAL
BRG	BEARING	MAX	MAXIMUM
BTM	BOTTOM	MECH	MECHANICAL
BUR	BUILT UP ROOFING	MET	METAL
		MFR	MANUFACTURER
C/C	CENTER TO CENTER	MH	MANHOLE
CJ	CONSTRUCTION JOINT	MIN	MINIMUM
C/L	CENTER LINE	MO	MASONRY OPENING
C/L	CENTER LINE	MOULD	MOULDING
CAR	CARPET (ROLL GOODS/BROADLOOM)	MTD	MOUNTED
CBB	CEMENTITIOUS BACKER BOARD		
CCT	CUBICLE CURTAIN TRACK	NIC	NOT IN CONTRACT
CLG	CEILING	NO.	NUMBER
CLO	CLOSET	NOM	NOMINAL
CMU	CONCRETE MASONRY UNIT	NTS	NOT TO SCALE
COL	COLUMN		
CONC	CONCRETE	OC	ON CENTER
CONF	CONFERENCE	OD	OUTSIDE DIAMETER
CONST	CONSTRUCTION	OPNG	OPENING
CONT	CONTINUOUS	OPP	OPPOSITE
CONTR	CONTRACTOR	ORD	OVERFLOW ROOF DRAIN
CORR	CORRIDOR		
CPT	CARPET TILE	PARTN	PARTITION
CRS	COURSE	PERIM	PERIMETER
CT	CERAMIC TILE	PL	PLATE
		P/L	PROPERTY LINE
DBL	DOUBLE	PLAM	PLASTIC LAMINATE
DEM	DEMOLISH	PLBG	PLUMBING
DF	DRINKING FOUNTAIN	PLS	PLASTER
DIA	DIAMETER	PNL	PANEL
DIM	DIMENSION	PTD	PAINTED (PAINTED FINISH)
DN	DOWN	PR	PAIR
DS	DOWN SPOUT	PROJ	PROJECT
DP	DEEP	PT	PRESSURE TREATED
DR	DOOR	PLWD	PLYWOOD
DET	DETAIL		
DWG	DRAWING	QT	QUARRY TILE
EA	EACH	RAD	RADIUS
EF	EACH FACE	RD	ROOF DRAIN
E.J.	EXPANSION JOINT	REBAR	REINFORCING BAR
EL	ELEVATION	RECT	RECTANGULAR
ELEC	ELECTRICAL	REINF	REINFORCEMENT
ELEV	ELEVATOR	REQ	REQUIRED
ENCL	ENCLOSED (SURE)	REP	REPRESENTATIVE
EQ	EQUAL	RFG	RECESSED FOOT GRILLE
EQUIP	EQUIPMENT	RM	ROOM
ETC	ET CETERA	R/W	RIGHT-OF-WAY
EW	EACH WAY	RWC	RAIN WATER CONDUCTOR
EWC	ELECTRIC WATER COOLER		
EXIST	EXISTING	S/H	SEALER/HARDENER
EXT	EXTERIOR	SC	SOLID CORE
		SF	SQUARE FOOT
FD	FLOOR DRAIN	SFCMU	SPLIT FACE CONCRETE MASONRY UNITS
FE	FIRE EXTINGUISHER		
FEC	FIRE EXTINGUISHER CABINET	SGB	STRUCTURAL GLAZED BLOCK
FH	FIRE HYDRANT	SIM	SIMILAR
FHC	FIRE HOSE CABINET	SK	SINK
FIN	FINISH	SOG	SLAB ON GRADE
FIXT	FIXTURE	SPEC	SPECIFICATIONS
FL	FLOOR	SQ	SQUARE
FLDR	FOLDING DOOR	SRGB	SAG-RESISTANT GYPSUM BOARD
FM	FACTORY MUTUAL	SS	STAINLESS STEEL
FR	FIRE RATED	STC	SOUND TRANSMISSION CLASS
FRTW	FIRE RETARDANT TREATED WOOD	STD	STANDARD
FSS	FOLDING SHOWER SEAT	STL	STEEL
FT	FOOT	STOR	STORAGE
FTG	FOOTING	STRUCT	STRUCTURAL
		SUPPL	SUPPLEMENTARY
GA	GAUGE	SUSP	SUSPENDED
GALV	GALVANIZED	SV	SHEET VINYL
GB	GRAB BAR	SVT	SOLID VINYL TILE
GC	GENERAL CONTRACTOR		
GFCMU	GROUND FACE CONCRETE MASONRY UNITS	TEMP	TEMPERED
		T/BM	TOP OF BEAM
GL	GLASS, GLAZING	T&G	TONGUE AND GROOVE
GLB	GLASS BLOCK	THR	THRESHOLD
GLCMU	GLAZED FACE CONCRETE MASONRY UNITS	T/JIST	TOP OF JOIST
		TKBD	TACK BOARD
GYPLS	GYPSUM PLASTER	TOM	TOP OF MASONRY
GWB	GYPSUM WALL BOARD	TOS	TOP OF SLAB
		T/STL	TOP OF STEEL
H	HIGH, HEIGHT	TTD	TOILET TISSUE DISPENSER
HC	HANDICAPPED	TYP	TYPICAL
HD	HAND DRYER		
HDWE	HARDWARE	UNO	UNLESS NOTED OTHERWISE
HDWD	HARDWOOD		
HM	HOLLOW METAL	V	VINYL
HORIZ	HORIZONTAL(LY)	VCT	VINYL COMPOSITION TILE
HR	HOUR	VERT	VERTICAL
HVAC	HEATING, VENTILATING, AIR CONDITIONING	VEST	VESTIBULE
		W/	WITH
		WC	WATER CLOSET
		WD	WOOD
		W/O	WITHOUT
		WR	WASTE RECEPTACLE
		WPT	WOOD - PRESERVATIVE TREATED
		WWF	WELDED WIRE FABRIC

NOTES:
1. FOR ADDITIONAL REFERENCE THE CONSTRUCTION INDUSTRY STANDARDS – C.S.I DOCUMENT TD – 2-4 ABBREVATIONS.
2. THIS LEGEND DOES NOT ASSUME THAT ALL ABBREVATIONS ARE USED.

SYMBOLS AND MATERIALS

1 / A5.1 SECTION	SECTION CUT INDICATOR
1 / A1.2 MATCH LINE	MATCH LINE INDICATOR
1 / A6.3	DETAIL INDICATOR
2 / 3 / A4.2	INTERIOR ELEVATION INDICATOR
ROOM NAME 101	ROOM NUMBER –SEE ROOM FINISH SCHEDULE
101–A	DOOR NUMBER SEE DOOR SCHEDULE
A	WALL/PARTITION TYPE
	WALL/PARTITION
1	KEYNOTE
A	WINDOW TYPE
S1	SIGNAGE TYPE
8'-0"	CEILING HEIGHT
100	EQUIPMENT NUMBER/TAG
	CONTINUOUS WOOD FRAMING
	WOOD BLOCKING
	PLYWOOD
	PARTICLE/FIBER BOARD
	FINISHED WOOD
	BATT INSULATION
	RIGID INSULATION
	LATH AND PLASTER
	GYPSUM BOARD
	CERAMIC TILE
	UNDISTURBED EARTH OR UNDISTURBED SUBGRADE
	COMPACTED EARTH OR COMPACTED SUBGRADE
	POUROUS FILL OR SUBBASE
	CAST–IN–PLACE CONCRETE
	PRECAST CONCRETE
	GROUT
	CONCRETE MASONRY UNITS
	GLAZED FACE CONCRETE MASONRY UNITS
	BRICK
	GLAZED BRICK
	GLASS UNIT MASONRY
	STEEL
	ALUMINUM
	ORNAMENTAL METAL
	TERRAZZO
	ACOUSTICAL CEILING
	CARPET

CODE DATA

Building Codes:
2009 International Building Code
ADA American Disabilities Act.
2008 NEC National Electrical Code
2009 National Plumbing Code
2009 National Mechanical Code

CHAPTER 3 – USE & OCCUPANCY CLASSIFICATION:

Section 302 Occupancy Classifications:

General Requirements from IBC – Table 508.2 for Separation of Incidental Use Areas provided in this facility are as follows:
Furnace Rooms w/equipment > 400,000 Btu/hour Input – 1-hour or automatic fire extinguishing system.
Storage Rooms > 100 Square Feet – 1-hour or automatic fire extinguishing system.
Since this facility is equipped with an Automatic Sprinkler System these separation requirements do not apply.

Section 303 Assembly Group A:

FC, Including Kitchen, shall be classified as an A-2 Occupancy by definition.
Per Chapter 5, Section 508.3.1 Accessory Occupancies, the FC shall be considered accessory to the RA.

Section 304 Business Group B:

AA shall be classified as a Business Occupancy by definition.

Section 309 Mercantile Group M:

RA, including Outdoor Garden Center and Merchandise Processing Area (MPA), shall be classified as Mercantile Occupancy by definition.

CHAPTER 5 – GENERAL BUILDING HEIGHTS & AREAS

Table 503 – Allowable height and Building Areas:

Check FC, AA, RA as "separated" A-2 Occupancy Classification.
Maximum Allowable Height and Building Area for Group A-2 – Type II B – 55' (2-Story), 9,500 SF. (Since A-2 is accessory to M these restrictions do not control)
Check FC, AA, RA as "separated" B Occupancy Classification.
Maximum Allowable Height and Building Area for Group B – Type II B = 55' (3-Story), 23,000 SF.
Check FC, AA, RA as "separated" M Occupancy Classification:
Maximum Allowable Height & Building Area for Group M – Type II B = 55' (2-Story), 12,800 SF.
Check FC, AA, RA as "separated" S-1 Occupancy Classification:
Maximum Allowable Height & Building Area for Group S-1 – Type II B = 55' (2-Story), 17,600 SF.

Section 506, Paragraph 506.1 The areas limited by Table 503 shall be permitted to be increased due to frontage (If) and automatic sprinkler system protection (Is).

A_a= Allowable area factor due to frontage = $[A_t+(A_t \times If)]+[A_t \times Is]$
If = Area Increase due to frontage = [(F/P-0.25)/0.15]
Is = Area increase factor due to sprinkler protection=200 percent.

Section 506, Paragraph 506.3 Automatic Sprinkler System Increase: Where a building is protected throughout with an approved Automatic Sprinkler System, the area limitation in Table 503 is permitted to be increased by an additional 200 Percent for double story buildings.

A-2 Assembly
A_a = 9,500 x (825/1055-.25) + (9,500 x 200/100) = 33,546 SF
B – Business
A_a = 23,000 + (23,000 x (825/1056-.25)) + (2300 x 200/100) = 81,218 SF
M – Mercantile
A_a = 12,500 + (12,500 x (825/1056-.25)) + (12,500 x 200/100) – 44,140 SF
S-1 – Storage
A_a = 17,500 + (12,500 x (825/1056-.25)) + (17500 x 200/100) = 61,798 SF

Section 508.3.3.2

B Floor Ratio Actual/Allowable = 8,945/81,218 = .085
M Floor Ratio Actual/Allowable = 33,212/44,140 = .752
S-1 Floor Ratio Actual/Allowable = 9,120/61,798 = .153
Total = 1.000

Table 508.4 Required separation of occupants

B, M, S-1 – No separation required

CHAPTER 6 – TYPES OF CONSTRUCTION:

Section 602 Construction Classification:
By definition this building falls under the requirements of Type II B Construction.

CHAPTER 7 – FIRE-RESISTANCE-RATED CONSTRUCTION:

Section 706 Fire Walls:
MPA will not need to be separated from Mercantile due to the presence of an Automatic Sprinkler System

CHAPTER 9 – FIRE PROTECTION SYSTEMS:

This building is equipped with an Automatic Sprinkler System.

CODE DATA

CHAPTER 10 – MEANS OF EGRESS:

Section 1004 Occupant Load:

FC: Due to this area being an Accessory Occupancy to the RA, the occupancy load shall be included in the RA total occupancy calculation.
AA: Business – 100 GSF/Occupant.
Check AA Occupancy = (3393 ÷100) = 34 Occupants
RA: Mercantile – 30 GSF/Occupant.
Mercantile Storage/Stock/Shipping – 300 GSF/Occupant.
Assembly – Unconcentrated (table & chairs) – 15 GSF/Occupant.
Kitchens, Commercial – 200 GSF/Occupant.
Kitchen Storage – 300 GSF/Occupant.
Check RA Occupancy = (32,717 ÷30) + (8897 ÷ 300) + (1200 ÷300) + (1684 ÷ 15) + (721 ÷200) + (811 ÷300) = 1178 Occupants

Section 1008 Egress Width:

Check AA Exit Capacity = 70 x 0.2 = 14 inches. 88+ inches provided
Check RA Exit Capacity = 1178 x 0.2 = 235.6 inches 544+ inches provided
Total = 249.6 inches.
Provided – 612 inches.

Section 1014 Common Path of Egress Travel:

Use Group A-2 & M – 75' Max with Sprinkler.
Use Group B & S – 100' Max with Sprinkler.

Section 1015 Exit & Exit Access Doorways:

Paragraph 1015.1, Exit or Exit Access Doorways required:
2 exits required in AA. (Business) - 6+
4 exits required in RA. (Mercantile) - 8
2 exits required in MPA. (Storage) - 6+

Section 1016 Exit Access Travel Distance:

Group M & A-2 = 250 ft. maximum exit access travel distance with sprinkler system.
Group B = 300 ft. maximum exit access travel distance with sprinkler system

CHAPTER 29 – PLUMBING SYSTEMS:

Table 2902.1 minimum Number of Plumbing Facilities:

FC (A-2 Occupancy): 114	Required M/F
Water Closets – 1/75 male & 1/75 female.	.76 / .76
Lavatories – 1/200.	.29 / .29
Drinking Fountains – 1/500.	.23
Service Sink – 1 required.	1
AA (B Occupancy): 34	
Water Closets – 1/25 for 1st 50 & 1/50 thereafter for both male and female*.	.7 / .7
Lavatories – 1/40 for 1st 50 & 1/80 thereafter for both male & female*.	.43/ .43
Drinking Fountains – 1/100.	.34
Service Sink – 1 required.	
RA (M Occupancy):	
Water Closets – 1/600 male & 1/500 female.	1.03/1.03
Lavatories – 1/750 male and 1/750 female.	.69/.69
Drinking Fountains – 1/1000.	1.03
Service Sink – 1 required.	
Water Closets Required: Male – 4, Female – 4.	Provided: Male 6 ½, Female 7 ½.
Lavatories Required: Male – 3, Female – 3.	Provided: Male 4 ½, Female 7 ½.
Drinking Fountains Required: 3	Provided: 3
Service Sinks Required: 1	

DRAWING INDEX

TITLE

T1.0 TITLE SHEET
T1.1 DRAWING INDEX, CODE DATA
T1.2 LIFE SAFETY PLAN / CODE ANALYSIS
T1.3 CONSTRUCTION PHASING

DEMOLITION

D1.0 OVERALL DEMOLITION FLOOR PLAN
D1.1 AREA "A" – DEMO PLAN
D1.2 AREA "B" – DEMO PLAN
D1.3 AREA "C" – DEMO PLAN
D9.0 DEMO REFLECTED CEILING PLAN
D9.1 AREA "A" – DEMO REFLECTED CEILING PLAN
D9.2 AREA "B" – DEMO REFLECTED CEILING PLAN
D9.3 AREA "C" – DEMO REFLECTED CEILING PLAN

ARCHITECTURAL

A1.0 OVERALL FLOOR PLAN
A1.1 AREA "A" – ENLARGED FLOOR PLAN
A1.2 AREA "B" – ENLARGED FLOOR PLAN
A1.3 AREA "C" – ENLARGED FLOOR PLAN
A1.4 DOOR SCHEDULE & DETAILS
A1.5 DOOR DETAILS
A1.6 WALL TYPES & DETAILS
A1.7 COLUMN ENCLOSURES, CEILING DETAILS
A2.0 ROOF PLAN
A3.0 BUILDING ELEVATIONS
A4.0 BUILDING SECTIONS
A5.0 WALL SECTIONS & DETAILS
A5.1 WALL SECTIONS & DETAILS
A5.2 WALL SECTIONS & DETAILS
A5.3 WALL SECTIONS & DETAILS
A5.4 BID OPTION #2: WALL SECTIONS & DETAILS
A6.0 ENLARGED PUBLIC RESTROOMS
A6.1 ENLARGED ANTHONY'S PIZZA, CHARLEY'S SUBS, & BACK OF HOUSE
A6.2 ENLARGED DUNKIN DONUTS & LP OFFICES
A6.3 ENLARGED BARBER SHOP, ENLARGED OPTICAL
A6.4 ENLARGED EMPLOYEE AREA
A6.5 ENLARGED ADMINISTRATIVE OFFICES
A6.6 BID OPTION #2: MCSS OFFICE / BREAK RM & ALTERATIONS
A7.0 INTERIOR FINISH MATERIAL SCHEDULE & ROOM FINISH SCHEDULE
A7.1 AREA "A" – FLOOR FINISH PLAN
A7.2 AREA "B" – FLOOR FINISH PLAN
A7.3 AREA "C" – FLOOR FINISH PLAN
A7.4 MILLWORK DETAILS
A7.5 MILLWORK DETAILS
A8.1 INTERIOR ELEVATIONS
A8.2 INTERIOR ELEVATIONS: SALES FLOOR
A8.3 INTERIOR ELEVATIONS: SALES AREA
A8.4 INTERIOR ELEVATIONS
A9.0 OVERALL REFLECTED CEILING PLAN
A9.1 AREA "A" – REFLECTED CEILING PLAN
A9.2 AREA "B" – REFLECTED CEILING PLAN
A9.3 AREA "C" – REFLECTED CEILING PLAN

EQUIPMENT

EQ1.0 EQUIPMENT / FURNITURE PLAN: OVERALL BUILDING
EQ1.1 ENLARGED EQUIPMENT / FURNITURE PLANS
EQ1.2 EQUIPMENT SCHEDULES

STRUCTURAL

S1.00 GENERAL NOTES & TYPICAL DETAILS
S2.00 FOUNDATION PLAN, ROOF FRAMING PLAN, & FOUNDATION DETAILS
S2.01 ROOF FRAMING SECTIONS

PLUMBING

PD1.1 PLUMBING DEMOLITION PLAN (1 OF 3)
PD1.2 PLUMBING DEMOLITION PLAN (2 OF 3)
PD1.3 PLUMBING DEMOLITION PLAN (3 OF 3)
P0.0 PLUMBING SCHEDULES, LEGEND, & NOTES
P1.1 PLUMBING PLAN (1 OF 3)
P1.2 PLUMBING PLAN (2 OF 3)
P1.3 PLUMBING PLAN (3 OF 3)
P2.1 PLUMBING DETAILS (1 OF 2)
P2.2 PLUMBING DETAILS (2 OF 2)

MECHANICAL

MD1.1 MECHANICAL DEMOLITION PLAN (1 OF 3)
MD1.2 MECHANICAL DEMOLITION PLAN (2 OF 3)
MD1.3 MECHANICAL DEMOLITION PLAN (3 OF 3)
MD2.0 ROOF PLAN – HVAC DEMO
M0.0 MECHANICAL LEGEND AND NOTES
M1.1 MECHANICAL PLAN (1 OF 3)
M1.2 MECHANICAL PLAN (2 OF 3)
M1.3 MECHANICAL PLAN (3 OF 3)
M2.0 ROOF PLAN – HVAC
M3.1 MECHANICAL SCHEDULES
M4.1 MECHANICAL DETAILS

ELECTRICAL

ED1.0 BASEMENT ELECTRICAL LIGHTING & CEILING EQUIPMENT DEMOLITION PLAN
ED1.1 ELECTRICAL LIGHTING & CEILING EQUIPMENT DEMOLITION PLAN (AREA A)
ED1.2 ELECTRICAL LIGHTING & CEILING EQUIPMENT DEMOLITION PLAN (AREA B)
ED1.3 ELECTRICAL LIGHTING & CEILING EQUIPMENT DEMOLITION PLAN (AREA C)
ED2.0 BASEMENT ELECTRICAL POWER DEMOLITION PLAN
ED2.1 ELECTRICAL POWER DEMOLITION PLAN (AREA A)
ED2.2 ELECTRICAL POWER DEMOLITION PLAN (AREA B)
ED2.3 ELECTRICAL POWER DEMOLITION PLAN (AREA C)
E0.1 ABBREVIATIONS/SHEET INDEX/SYMBOLS/LIGHTING SCHEDULE
E1.1 LIGHTING PLAN (AREA A)
E1.2 LIGHTING PLAN (AREA B)
E1.3 LIGHTING PLAN (AREA C)
E2.1 POWER PLAN (AREA A)
E2.2 POWER PLAN (AREA B)
E2.3 POWER PLAN (AREA C)
E3.1 COMMUNICATIONS PLAN (AREA A)
E3.2 COMMUNICATIONS PLAN (AREA B)
E3.3 COMMUNICATIONS PLAN (AREA C)
E4.1 FIRE ALARM PLAN (AREA A)
E4.2 FIRE ALARM PLAN (AREA B)
E4.3 FIRE ALARM PLAN (AREA C)
E5.1 ENLARGED ELECTRICAL PLANS
E6.0 POWER DISTRIBUTION RISER
E6.1 PANEL SCHEDULES
E6.2 PANEL SCHEDULES
E7.0 ELECTRICAL DETAILS

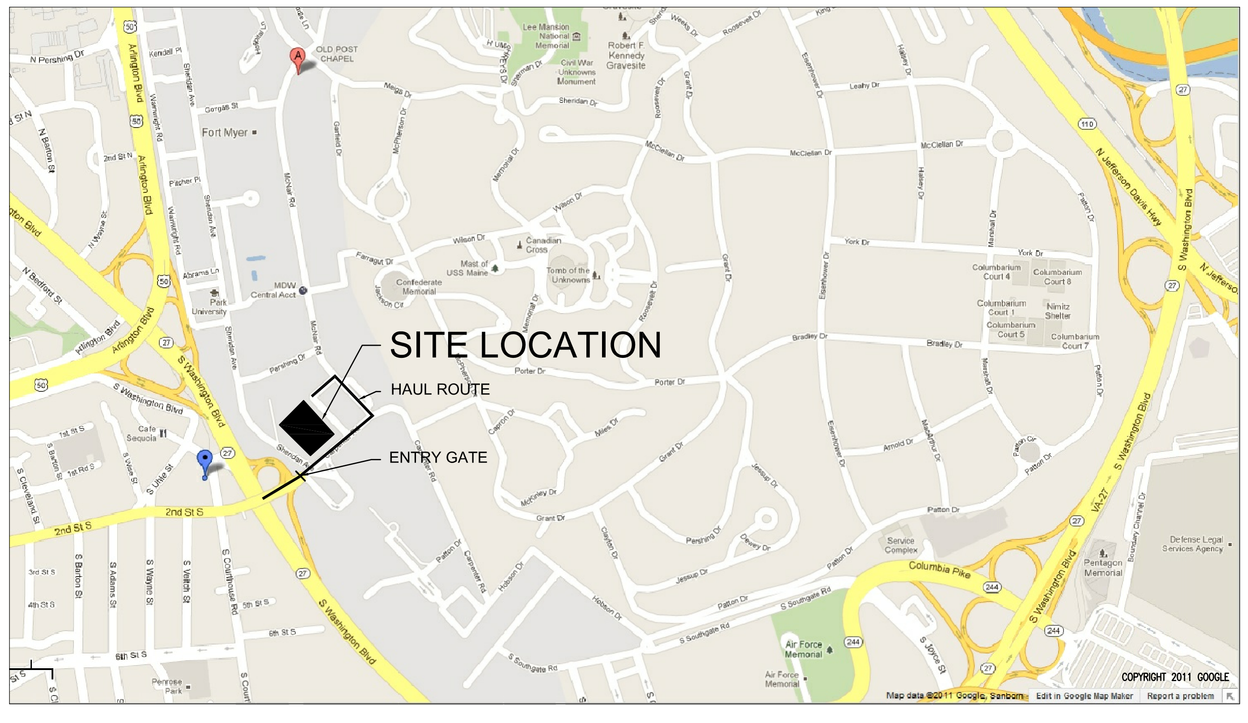

1 / T1.1 SITE LOCATION/HAUL ROUTE
SCALE: NTS

CONSULTANTS

ARCHITECT
RICHARD L. BOWEN + ASSOCIATES INC.
13000 SHAKER BOULEVARD
CLEVELAND, OHIO 44120
216.491.9300 (PH)
216.491.8053 (FAX)

STRUCTURAL ENGINEER
RICHARD L. BOWEN + ASSOCIATES INC.
13000 SHAKER BOULEVARD
CLEVELAND, OHIO 44120
216.491.9300 (PH)
216.491.8053 (FAX)

MECHANICAL ENGINEER
RICHARD L. BOWEN + ASSOCIATES INC.
13000 SHAKER BOULEVARD
CLEVELAND, OHIO 44120
216.491.9300 (PH)
216.491.8053 (FAX)

ELECTRICAL ENGINEER
RICHARD L. BOWEN + ASSOCIATES INC.
13000 SHAKER BOULEVARD
CLEVELAND, OHIO 44120
216.491.9300 (PH)
216.491.8053 (FAX)

DATES AND REVISIONS

No.	Date/Description
	04.11.12 – BID

EXCHANGE™

RICHARD L. BOWEN + ASSOCIATES INC.
13000 Shaker Boulevard / Cleveland, Ohio 44120
Phone: (216) 491-9300 Fax: (216) 491-8053
www.rlba.com - email@rlba.com

FT. MYER EXCHANGE
JBMHH - MYER
ARLINGTON, VIRGINIA

DRAWING INDEX, CODE DATA

DRAWN BY: RTV
CHECKED BY: –
RLB NO.: 7800.02

DRAWING NO.
T1.1

P:\7800\7800.02 FT. MYER PX IMAGE UPGRADE CONST. CONTRACT DOCS\ARCH\7800X02_T01-01.DWG | PLOTTED 04.26.2012 03:58PM BY RYAN VANJO

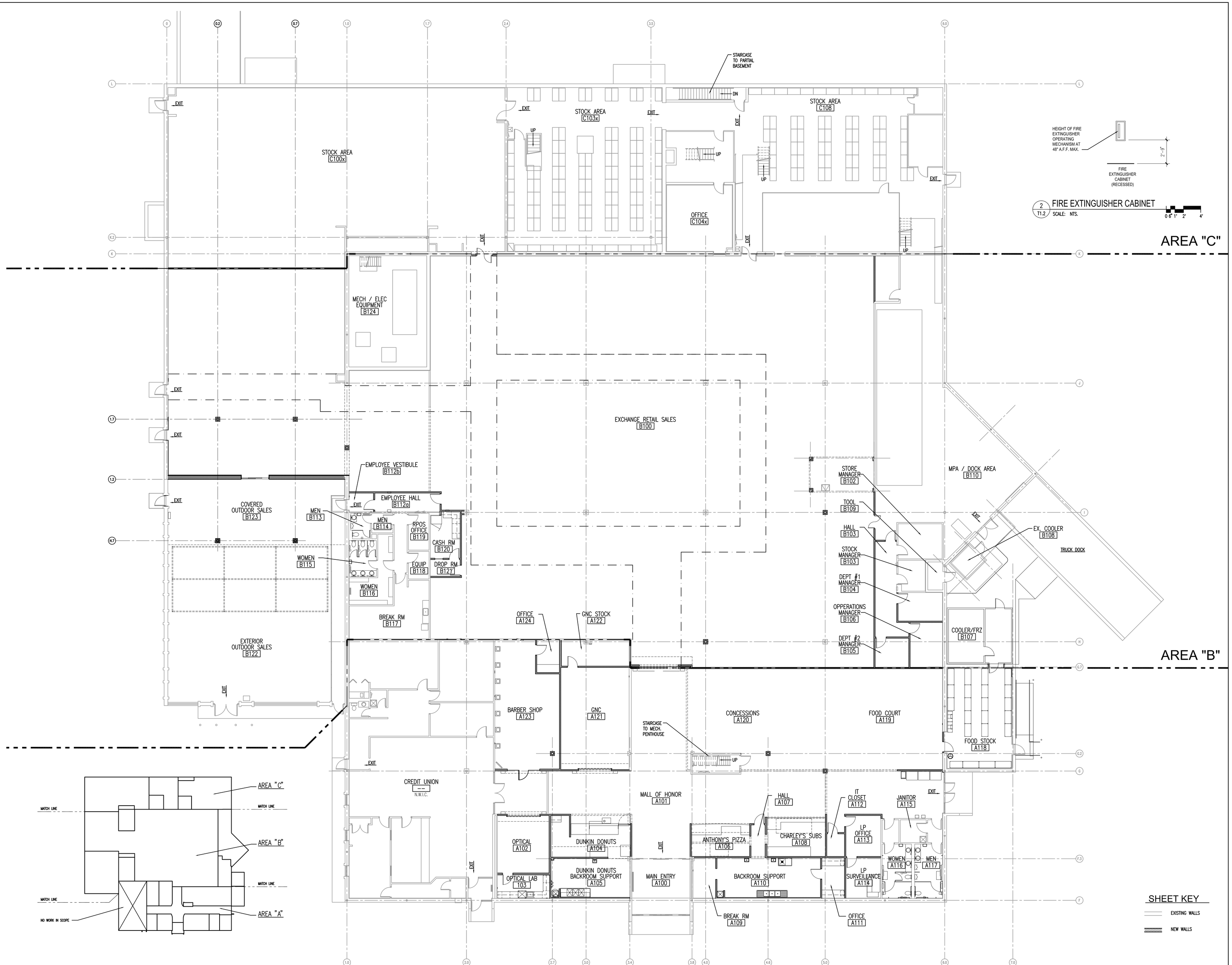

DATES AND REVISIONS	
No.	Date/Description
	04.11.12 – BID

EXCHANGE™

RICHARD L. BOWEN + ASSOCIATES INC.
13000 Shaker Boulevard / Cleveland, Ohio 44120
Phone: (216) 491-9300 Fax: (216) 491-8053
www.rlba.com - email@rlba.com

FT. MYER EXCHANGE
JBMHH - MYER
ARLINGTON, VIRGINIA

LIFE SAFETY PLAN / CODE ANALYSIS

DRAWN BY: RTV
CHECKED BY: --
RLB NO.: 7800.02

DRAWING NO.
T1.2

P:\7800\7800.02 FT. MYER PX IMAGE UPGRADE CONST. CONTRACT DOCS\ARCH\7800.02_T01-02.DWG | PLOTTED 04.09.2012 10:21AM BY ANDREW HENLEY

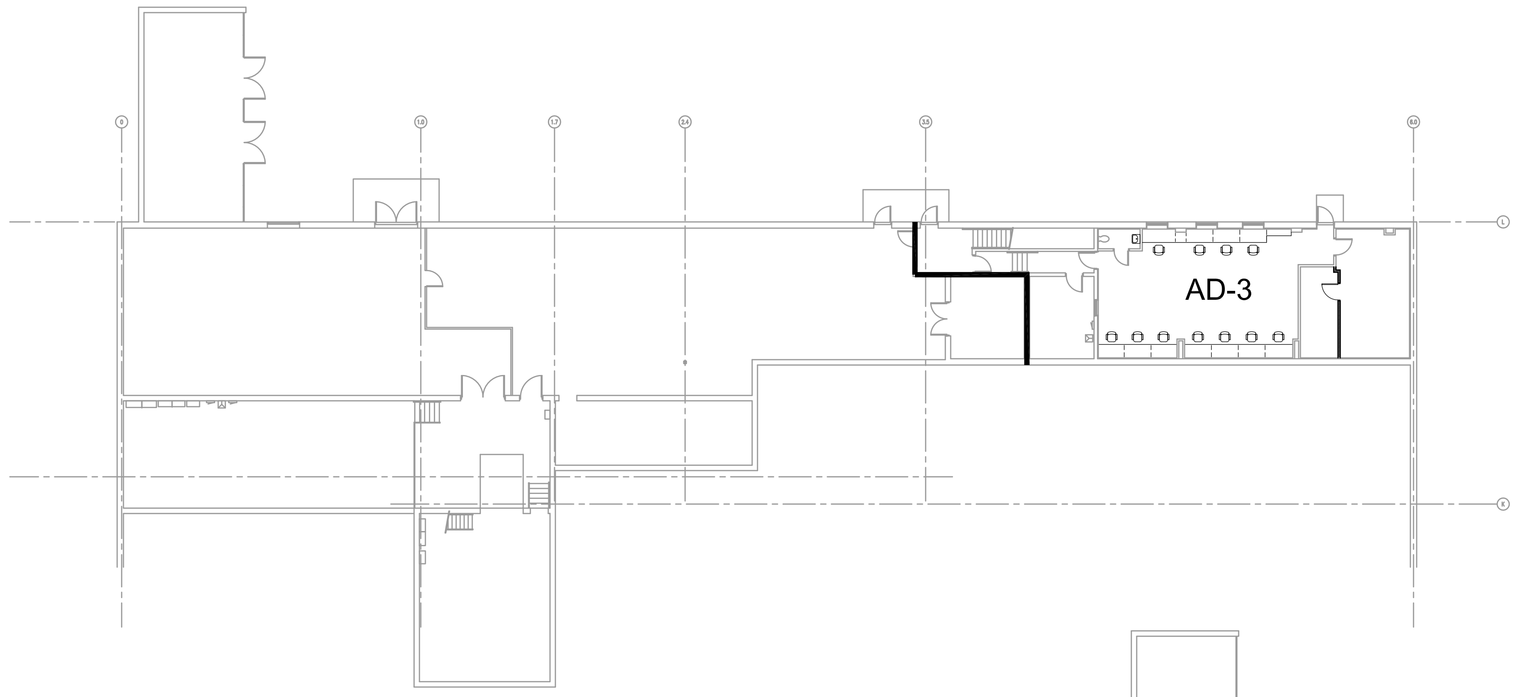

CONSTRUCTION PHASE SCHEDULE

NIGHT WORK	PHASE	DAYS	BUILDING AREA
	EW-1	21	EXTERIOR WORK - DOCK AREA
	EW-2	2	EXTERIOR WORK - SIGNAGE (BY OTHERS)
	OS-1	42	OUTDOOR SALES
	OS-2	14	OUTDOOR SALES
	R-1	21	FLEX, HOME, LINENS, HOUSEWARES, SPORTING GOODS
	R-2	21	OUTDOOR LIVING, LUGGAGE
	R-3	14	POWERZONE, MUSIC
	R-4	14	SHOES, MENSWEAR
	R-5	21	WOMENSWEAR
	R-6	14	HBC, CLEANING, HARDWARE, STATIONARY
	R-7	14	JEWELRY, COSMETICS, FRAGRANCES, MAKE-UP, LADIES ACCESSORIES
●	R-8A	10	CHECKOUT, VALUE ZONE
●	R-8B	10	CHECKOUT, TOBACCO
	MC-1	21	ALTERATIONS / MCSS OFFICE, MCSS BREAK ROOM, MCSS RESTROOM
	MC-2	14	MCSS
	MC-3	21	MCSS
	AD-1	21	ADMINISTRATIVE OFFICES
	AD-2	21	CASH ROOM
	AD-3	14	BASEMENT OFFICES
	AD-4	21	EMPLOYEE AREA
	M-1	21	BARBER SHOP
	M-2	21	OPTICAL SHOP
●	M-3	14	RESTROOMS
	M-4	21	LOSS PREVENTION OFFICES
	M-5	14	GNC
●	M-6	14	MALL CORRIDOR - NORTH
●	M-7	14	MALL CORRIDOR - EAST - WEST
●	M-8	14	MALL CORRIDOR - SOUTH
	FC-1	21	FOOD COURT SEATING
	FC-2	14	FOOD STOCK
	FC-3	7	COOLER
	FC-4	60	DUNKIN DONUTS
	FC-5	60	CHARLEY'S
	FC-6	45	ANTHONY'S

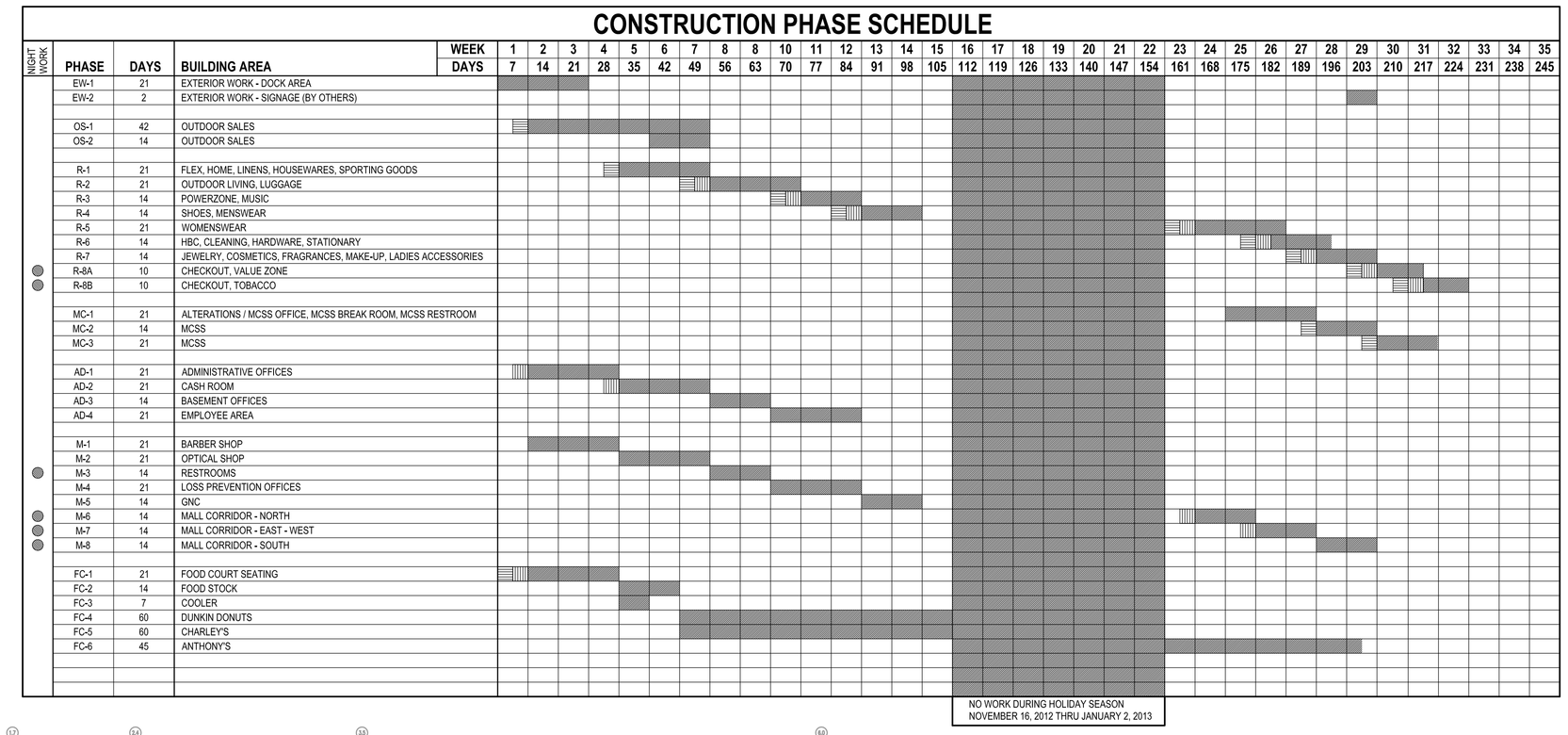

CONSTRUCTION PHASE SCHEDULE KEY

- GENERAL CONTRACTOR
- FLIC CONTRACTOR
- ABATEMENT CONTRACTOR (VERIFY w/ ABATEMENT SURVEY)

CONSTRUCTION PHASE NOTES

1. PHASE BOUNDARY LINES INDICATE APPROXIMATE PERIMETER OF WORK AREA FOR NOTED PHASE. PERMANENT AND TEMPORARY WALLS ARE TO BE CONSTRUCTED TO CREATE THE BOUNDARY AREAS. COORDINATE BOUNDARIES WITH NEW CONSTRUCTION AS INDICATED ON DRAWINGS. WORK SHALL NOT ENCROACH ADJACENT AREAS EXCEPT AS NEEDED TO COMPLETE THE DESIGNATED PHASE.
2. PHASES SHALL OCCUR AT NIGHT AS INDICATED ON THE SCHEDULE. COORDINATE WITH THE STORE MANAGER FOR ACCESS AND SECURITY. PROVIDE STORE MANAGER ADEQUATE NOTICE OF NIGHT WORK SO THE STORE MANAGER CAN PROVIDE THE PROPER ARRANGEMENTS.
3. NO WORK SHALL OCCUR IN THE MALL AREA OR RETAIL SALES DURING THE TIME FRAME OF NOVEMBER 16, 2012 THROUGH JANUARY 2, 2013.
4. PHASE PLAN SHOWS WALLS TO BE REMOVED FOR REFERENCE BETWEEN EXISTING AND NEW.
5. ALL TEMPORARY BARRIERS SHALL BE CONSTRUCTED AND REMOVED BY THE CONTRACTOR. SEE DETAILS THIS SHEET AND SPECIFICATIONS.
6. ALL TEMPORARY DOORS SHALL BE 3'-0" x 7'-0" x1-3/4" H.M. DOORS IN H.M. FRAMES. PAINT DOORS & FRAMES WITH 1-COAT TINTED LATEX METAL PRIMER AND 1-COAT OF RED FINISH PAINT.
7. PROVIDE 10lb. CAPACITY MULTI-PURPOSE DRY CHEMICAL PRESSURIZED FIRE EXTINGUISHERS CAPABLE OF EXTINGUISHING CLASS A, B, & C FIRES. FIRE EXTINGUISHERS SHALL BE PROVIDED INSIDE ALL TEMPORARY WORK AREAS IN COMPLIANCE WITH THE REQUIREMENTS OF THE NFPA 10.
8. MAINTAIN ACCESS THROUGHOUT OTHER AREAS OF THE EXISTING RETAIL SPACES & OFFICES TO ALLOW CUSTOMER AND STAFF USE.
9. ANY ASBESTOS ABATEMENT WORK SHALL BE COORDINATED BY THE CONTRACTOR. THE ASBESTOS ABATEMENT CONTRACTOR SHALL PROVIDE THE EQUIPMENT / PROCESSES FOR NEGATIVE AIR, MAKE-UP AIR, & DECONTAMINATION UNITS. ASBESTOS ABATEMENT SHALL COMPLY WITH THE REQUIREMENTS OF THE SPECIFICATIONS.
10. CONSTRUCT OPAQUE DUST BARRIER TEMPORARY WALLS WHERE ASBESTOS CONTAINING MATERIALS ARE TO BE ABATED. TAPE & PAINT SURFACES ON THE PUBLIC SIDE OF THE WALL. 1-COAT WHITE LATEX PRIMER & 1-COAT WHITE LATEX EG-SHEL FINISH.
11. SEE SPECIFICATIONS FOR ADDITIONAL ASBESTOS ABATEMENT REQUIREMENTS.
12. WEEK 1 OF THE CONSTRUCTION PHASE SCHEDULE STARTS WITH THE FIRST DAY OF THE CONSTRUCTION WORK.

PROJECT BID OPTIONS

1. POLISHED CONCRETE:
   MALL AREAS: FC-1, M-6, M-7, & M-8
   INCLUDES THE "X" LOGO AS PER EXCHANGE STANDARDS.
   RETAIL AREAS: R-1, R-2, R-3, R-4, R-5, R-6, R-7, R-8A, & R-8B.
   MCSS AREA: MC-2 & MC-3 (ONLY IF BID OPTION #2 IS ACCEPTED).
   NOTE: AS PER PLANS & SPECIFICATIONS.
2. MCSS:
   AREAS: MC-1, MC-2, & MC-3.
   DRAWINGS SHOW WORK FOR THE MCSS. IF WORK IS NOT ACCEPTED AS A BID OPTION, THEN DOOR #B117 SHALL BE INSTALLED AND ALL WORK SHOWN IN THE MCSS AREA INDICATED SHALL REMAIN AS-IS. THE PROPOSED MCSS SALES AREA WILL BE USED AS ADDITIONAL STOCK AREA.
3. LIGHTING RETRO-FIT KITS:
   SEE ELECTRICAL DRAWINGS.

BASEMENT CONSTRUCTION PHASING PLAN (2 / T1.3)
SCALE: 1/16" = 1'-0"

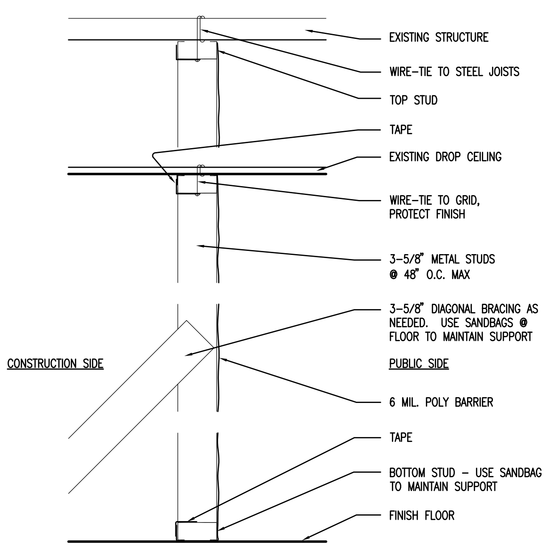

A / T1.3 DUST BARRIER DETAIL
SCALE: 1 1/2" = 1'-0"

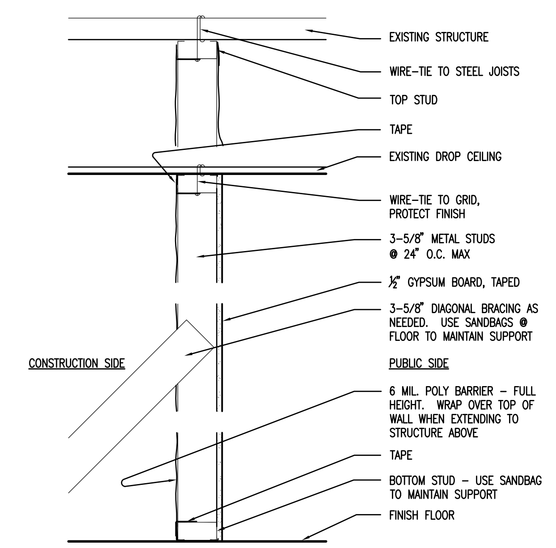

B / T1.3 OPAQUE DUST BARRIER DETAIL
SCALE: 1 1/2" = 1'-0"

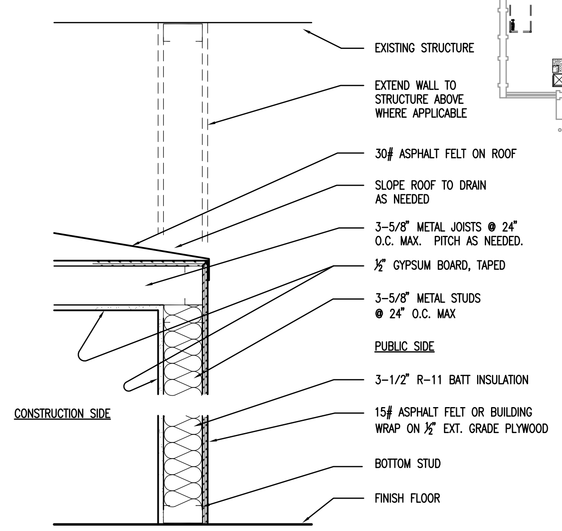

C / T1.3 SECURITY / WEATHER-TIGHT BARRIER
SCALE: 1 1/2" = 1'-0"

BID OPTION #2

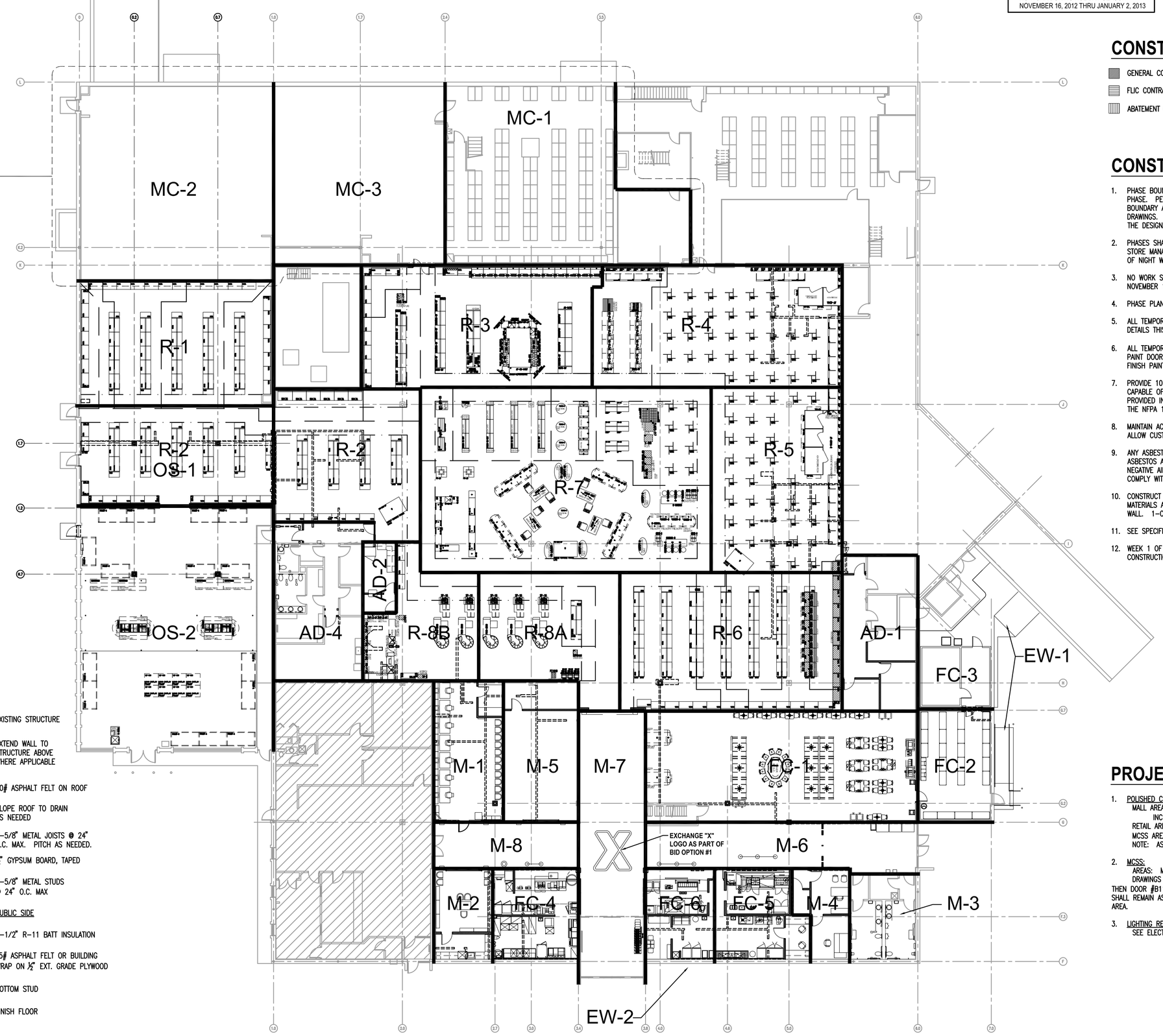

1 / T1.3 MAIN FLOOR CONSTRUCTION PHASING PLAN
SCALE: 1/16" = 1'-0"

DATES AND REVISIONS

No.	Date/Description
	04.11.12 - BID

EXCHANGE™

RICHARD L. BOWEN + ASSOCIATES INC.
ARCHITECTS • ENGINEERS • MANAGERS • CONSTRUCTION
13000 Shaker Boulevard / Cleveland, Ohio 44120
Phone: (216) 491-9300 Fax: (216) 491-9303
www.rlba.com - email@rlba.com

FT. MYER EXCHANGE
JBMHH - MYER
ARLINGTON, VIRGINIA

CONSTRUCTION PHASING

DRAWN BY: RTV
CHECKED BY: --
RLB NO.: 7800.02

DRAWING NO. T1.3

P:\7800\7800.02 FT. MYER PX IMAGE UPGRADE CONST. CONTRACT DOCS\ARCH\7800X02_T01-03.DWG | PLOTTED 04.26.2012 04:22PM BY RYAN VANJO

BID OPTION #2 AREA

GENERAL SHEET NOTES:

A. THIS SHEET IS TO DEMONSTRATE OVERALL PLAN, EXISTING ROOM SIZES, & BROAD VIEW SCOPE OF DEMOLITION WORK.

B. REFER TO ENLARGED DEMO PLANS FOR FURTHER INFORMATION.

SHEET KEY

EXISTING WALLS

WALLS, DOORS, EQUIPMENT, FURNITURE, ETC. TO BE REMOVED

AREA "C"

MATCH LINE

UP

DN

STOCK AREA
6,420 SF

ICA OFFICE
20'-6" x 20'-1"
414 SF

MECHANICAL ROOM

SECURED STORAGE
27'-6" x 14'-4"
393 SF

STORE MANAGER
TO BE RELOCATED
10'-4" x 13'-8"
141 SF

OFFICE
TO BE RELOCATED
10'-4" x 12'-11"
134 SF

ARMED FORCES BANK
TO BE REMOVED
14'-0" x 28'-0"
390 SF

EXCHANGE SALES AREA
TO BE UPGRADED
27,665 +/- SF

UNISEX RESTRM
TO BE REMOVED
4'-9" x 7'-0"
32 SF

JANITOR / ELEC
TO BE REMOVED
5'-1" x 7'-0"
35 SF

IT RM
TO BE RELOCATED
8'-7" x 10'-2"
88 SF

MPA DOCK AREA
2,518 SF

LP OFFICE #1
TO BE RELOCATED
10'-2" x 8'-0"
82 SF

EX OFFICE #1
TO BE UPGRADED
13'-8" x 10'-4"
142 SF

EMPLOYEE AREA
TO BE UPGRADED
24'-8" x 43'-0"
1,800 SF

GENERAL AREA OF HAZARDOUS MATERIALS AS INDICATED IN THE ASBESTOS SURVEY REPORT DATED 02.25.2012 PREPARED BY TRANS SYSTEMS, INC. REFER TO REPORT FOR FURTHER INFORMATION.

LP OFFICE #2
TO BE RELOCATED
(MONITOR SYSTEM)
10'-1" x 8'-0"
81 SF

EX OFFICE #2
TO BE UPGRADED
8'-6" x 9'-5"
78 SF

COOLER

TOOL RM

OUTDOOR SALES
TO BE UPGRADED
54'-10" x 87'-0"
4,500 SF

COOLER
TO BE REMOVED

AREA "B"

VACANT SPACE
TO BE UTILIZED

VACANT SPACE
TO BE UPGRADED
14'-8" x 40'-0"
587 SF

BARBER SHOP
TO BE RELOCATED
14'-2" x 40'-0"
567 SF

OPTICAL
TO BE RELOCATED
11'-11" x 40'-0"
486 SF

STAIRWELL

CREDIT UNION
NO WORK IN SCOPE
44'-6" x 79'-9"
3,544 SF

MALL SERVICES
TO BE UPGRADED

SIDE ENTRY
TO BE REMOVED
27'-0" x 14'-3"
368 SF

GNC
TO BE RELOCATED
15'-0" x 25'-10"
385 SF

FLORIST
TO BE RELOCATED
TO A KIOSK
25'-6" x 25'-10"
651 SF

MAIN ENTRY
VESTIBULE
TO BE UPGRADED

ANTHONY'S PIZZA
TO BE UPGRADED

FRANK'S FRANKS
TO BE REMOVED

COMBINED
OVERALL AREA
34'-9" x 25'-6"
887 SF

FOOD COURT
TO BE RELOCATED
23'-0" x 25'-6"
586 SF

WOMEN
TO BE
UPGRADED
8'-8" x 16'-8"
145 SF

MEN
TO BE
UPGRADED
8'-8" x 16'-8"
145 SF

AREA "A"

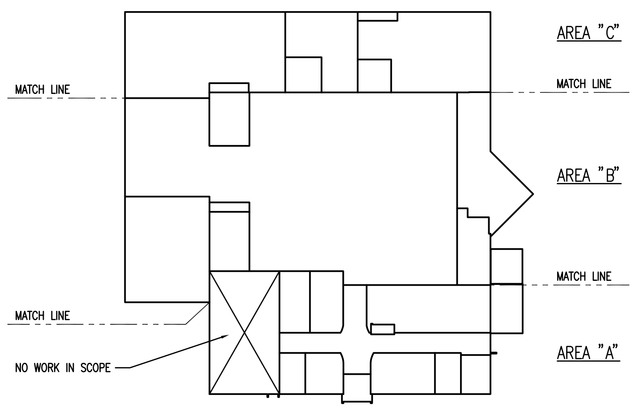

KEY PLAN
SCALE: NTS

TRUE NORTH

1 / D1.0 OVERALL FLOOR PLAN
SCALE: 3/32" = 1'-0"

0 2' 4' 8' 16'

DATES AND REVISIONS	
No.	Date/Description
	04.11.12 – BID

EXCHANGE™

RICHARD L. BOWEN + ASSOCIATES INC.
13000 Shaker Boulevard / Cleveland, Ohio 44120
Phone: (216) 491-9300 Fax: (216) 491-8053
www.rlba.com - email@rlba.com

FT. MYER EXCHANGE
JBMHH - MYER
ARLINGTON, VIRGINIA

OVERALL DEMOLITION FLOOR PLAN

DRAWN BY: RTV
CHECKED BY: ---
RLB NO.: 7800.02

DRAWING NO.
D1.0

P:\7800\7800.02 FT. MYER PX IMAGE UPGRADE CONST. CONTRACT DOCS\ARCH\7800D2_D01-00.DWG | PLOTTED 04.09.2012 09:56AM BY ANDREW HENLEY

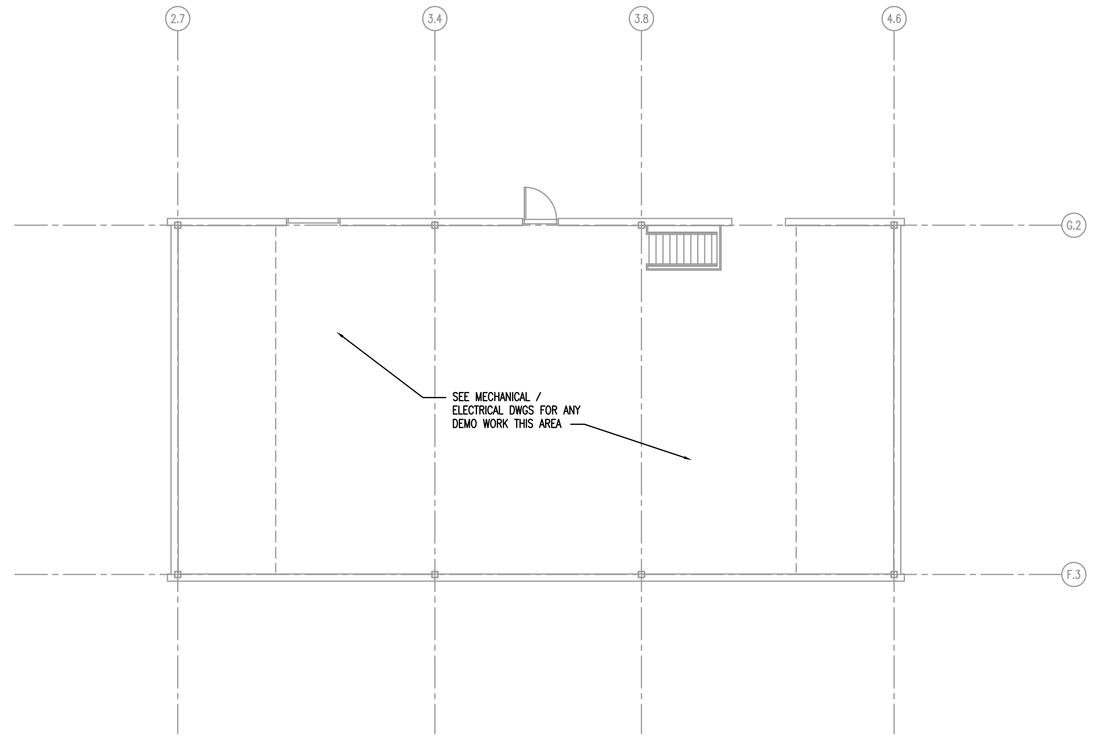

2 / D1.1 MECHANICAL PENTHOUSE DEMOLITION FLOOR PLAN
SCALE: 1/8" = 1'-0"
0 1' 2' 4' 8'
TRUE NORTH

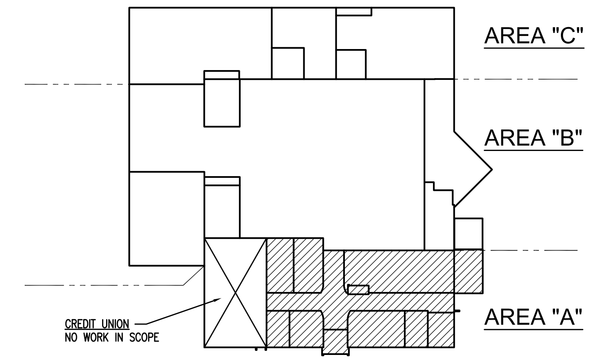

KEY PLAN
SCALE: N.T.S.
TRUE NORTH

DEMOLITION GENERAL NOTES:

A. THESE DRAWINGS DO NOT INDICATE THE FULL EXTENT OF THE WORK DETAILS REQUIRED TO COMPLETE THIS REMODEL PROJECT. VERIFY EXISTING CONDITIONS FOR THE FULL EXTENT OF THE WORK REQUIRED TO COMPLETE THIS PROJECT IN A WORKMANLIKE MANNER PER ALL APPLICABLE CODES AND THESE DRAWINGS. COORDINATE WORK WITH THE PROJECT MANAGER & ARCHITECT.

B. DEMOLISH EXISTING CONSTRUCTION ONLY TO THE EXTENT NECESSARY TO COMPLETE THE NEW CONSTRUCTION. CUT BACK EXISTING FINISHED SURFACES TO SQUARE, LEVEL, AND PLUMB LINES.

C. CAREFULLY REVIEW PLANS AND DETERMINE UTILITIES THAT ARE REQUIRED TO BE DISCONNECTED AND THOSE THAT WILL REMAIN FUNCITONAL. COORDINATE WORK WITH THE APPROPRIATE UTILITY PROVIDER. SCHEDULE WORK FOR A MINIMUM OF INTERRUPTION.

D. REMOVE AND SECURE ALL GAS, PLUMBING, ELECTRICAL, AND OTHER UTILITIES ASSOCIATED WITH EQUIPMENT REMOVED FROM SITE. INSTALL REQUIRED MATERIALS TO SECURE AND MAKE SAFE ALL UTILITIES TO REMAIN. REFER TO PLUMBING, MECHANICAL, & ELECTRICAL DRAWINGS.

E. PREVENT PUBLIC ACCESS TO THE WORK AREA. INSTALL BARRIERS AND SIGNAGE TO ALERT THE GENERAL PUBLIC, EMPLOYEES, AND CONTRACTORS OF DANGERS.

F. GENERAL CONTRACTOR SHALL PROTECT ALL EQUIPMENT THAT WILL REMAIN FOLLOWING REMODEL BY PLACING IT IN STORAGE FOR THE DURATION OF THE PROJECT. COORDINATE WITH THE STORE MANAGER.

G. CONTRACTOR SHALL BE RESPONSIBLE FOR OBTAINING WORK PERMITS AND COMMUNICATING WITH UTILITY PROVIDER(S) PRIOR TO ANY WORK AFFECTING SERVICES. FIELD VERIFY LOCATION OF ALL SERVICES.

H. CONTRACTOR SHALL VERIFY w/ STORE MANAGER, PROJECT MANAGER & ARCHITECT ALL EQUIPMENT & FURNITURE TO BE REMOVED AND RELOCATED PRIOR TO COMMENCING WITH THE WORK.

I. ANY WALLS BEING PROPOSED FOR REMOVAL SHALL BE CONFIRMED BY THE CONTRACTOR AS BEING NON-LOAD BEARING BEFORE PROCEEDING WITH REMOVAL. IF LOAD-BEARING WALL(S) ARE FOUND DUE TO UNFORESEEN CONDITIONS, IT SHOULD BE BROUGHT DIRECTLY TO THE ARCHITECT'S ATTENTION BEFORE PROCEEDING WITH THE REMOVAL OF THAT WALL. NOTE: THE ARCHITECT HAS MADE ASSUMPTIONS BASED ON PREVIOUS DRAWINGS AND THE EXISTING CONDITIONS THAT ARE VIEWABLE. HE HAS USED HIS BEST JUDGMENT TO DETERMINE ALL LOAD-BEARING WALLS.

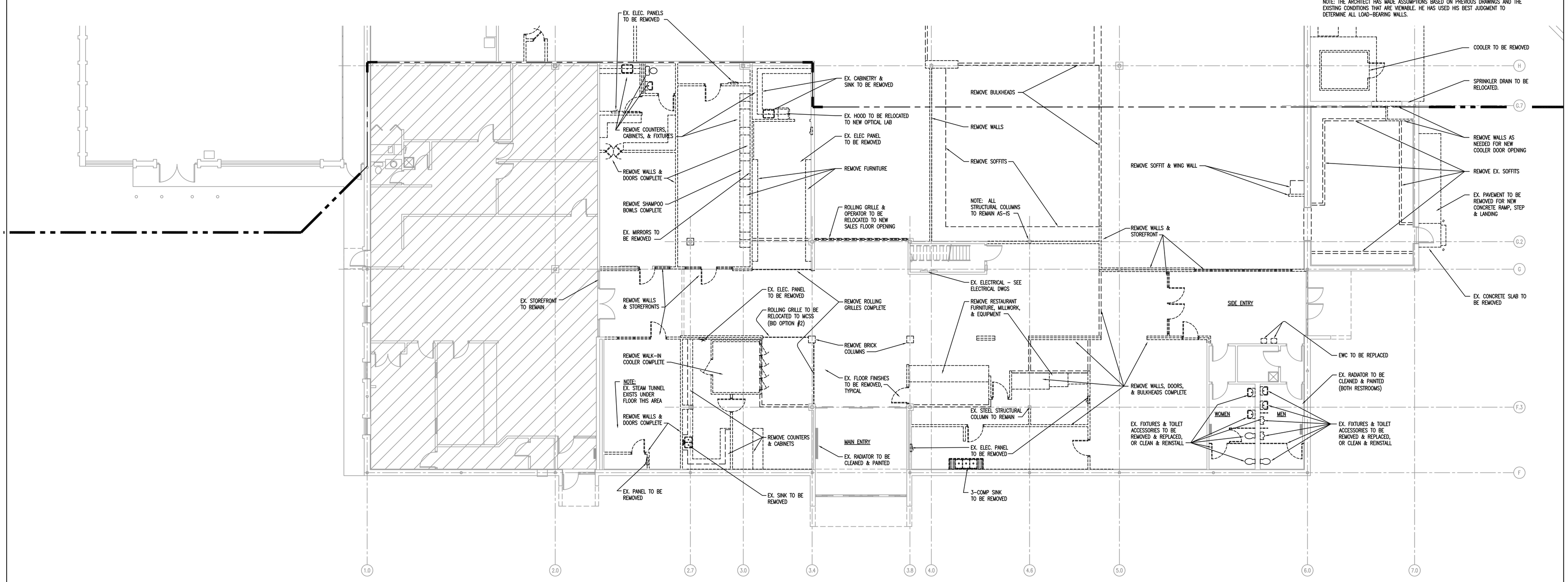

1 / D1.1 ENLARGED MALL & FOOD COURT DEMOLITION FLOOR PLAN
SCALE: 1/8" = 1'-0"
0 1' 2' 4' 8'
TRUE NORTH

SHEET KEY

EXISTING WALLS

WALLS, DOORS, EQUIPMENT, FURNITURE, ETC. TO BE REMOVED

AREA "A"

DATES AND REVISIONS

No.	Date/Description
	04.11.12 - BID

EXCHANGE™

RICHARD L. BOWEN + ASSOCIATES INC.
ARCHITECTS • ENGINEERS • CONSTRUCTION MANAGERS
13000 Shaker Boulevard / Cleveland, Ohio 44120
Phone: (216) 491-9300 Fax: (216) 491-8053
www.rlba.com - email@rlba.com

FT. MYER EXCHANGE
JBMHH - MYER
ARLINGTON, VIRGINIA

AREA "A"
DEMO PLAN

DRAWN BY: RTV
CHECKED BY: --
RLB NO.: 7800.02

DRAWING NO.
D1.1

P:\7800\7800.02 FT. MYER PX IMAGE UPGRADE CONST. CONTRACT DOCS\ARCH\7800D2_D01-01.DWG | PLOTTED 04.26.2012 03:58PM BY RYAN VANJO

DEMOLITION GENERAL NOTES:

A. THESE DRAWINGS DO NOT INDICATE THE FULL EXTENT OF THE WORK DETAILS REQUIRED TO COMPLETE THIS REMODEL PROJECT. VERIFY EXISTING CONDITIONS FOR THE FULL EXTENT OF THE WORK REQUIRED TO COMPLETE THIS PROJECT IN A WORKMANLIKE MANNER PER ALL APPLICABLE CODES AND THESE DRAWINGS. COORDINATE WORK WITH THE ARCHITECT.

B. DEMOLISH EXISTING CONSTRUCTION ONLY TO THE EXTENT NECESSARY TO COMPLETE THE NEW CONSTRUCTION. CUT BACK EXISTING FINISHED SURFACES TO SQUARE, LEVEL, AND PLUMB LINES.

C. CAREFULLY REVIEW PLANS AND DETERMINE UTILITIES THAT ARE REQUIRED TO BE DISCONNECTED AND THOSE THAT WILL REMAIN FUNCTIONAL. COORDINATE WORK WITH THE APPROPRIATE UTILITY PROVIDER. SCHEDULE WORK FOR A MINIMUM OF INTERRUPTION.

D. REMOVE AND SECURE ALL GAS, PLUMBING, ELECTRICAL, AND OTHER UTILITIES ASSOCIATED WITH EQUIPMENT REMOVED FROM SITE. INSTALL REQUIRED MATERIALS TO SECURE AND MAKE SAFE ALL UTILITIES TO REMAIN. REFER TO PLUMBING, MECHANICAL, & ELECTRICAL DRAWINGS.

E. PREVENT PUBLIC ACCESS TO THE WORK AREA. INSTALL BARRIERS AND SIGNAGE TO ALERT THE GENERAL PUBLIC, EMPLOYEES, AND CONTRACTORS OF DANGERS.

F. GENERAL CONTRACTOR SHALL PROTECT ALL EQUIPMENT THAT WILL REMAIN FOLLOWING REMODEL BY PLACING IT IN STORAGE FOR THE DURATION OF THE PROJECT. COORDINATE WITH THE STORE MANAGER.

G. CONTRACTOR SHALL BE RESPONSIBLE FOR OBTAINING WORK PERMITS AND COMMUNICATING WITH UTILITY PROVIDER(S) PRIOR TO ANY WORK AFFECTING SERVICES. FIELD VERIFY LOCATION OF ALL SERVICES.

H. CONTRACTOR SHALL VERIFY w/ STORE MANAGER, PROJECT MANAGER & ARCHITECT ALL EQUIPMENT & FURNITURE TO BE REMOVED AND RELOCATED PRIOR TO COMMENCING WITH THE WORK.

I. ANY WALLS BEING PROPOSED FOR REMOVAL SHALL BE CONFIRMED BY THE CONTRACTOR AS BEING NON-LOAD BEARING BEFORE PROCEEDING WITH REMOVAL. IF LOAD-BEARING WALL(S) ARE FOUND DUE TO UNFORESEEN CONDITIONS, IT SHOULD BE BROUGHT DIRECTLY TO THE ARCHITECT'S ATTENTION BEFORE PROCEEDING WITH THE REMOVAL OF THAT WALL. NOTE: THE ARCHITECT HAS MADE ASSUMPTIONS BASED ON PREVIOUS DRAWINGS AND THE EXISTING CONDITIONS THAT ARE VIEWABLE. HE HAS USED HIS BEST JUDGMENT TO DETERMINE ALL LOAD-BEARING WALLS.

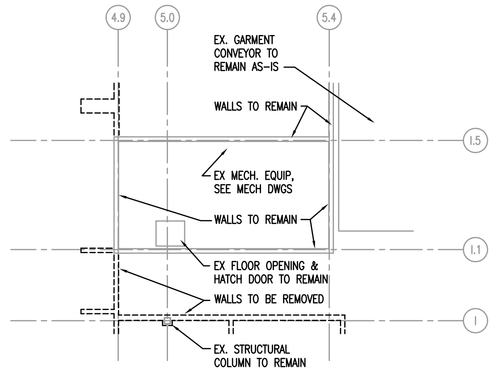

2 / D1.2 MECHANICAL MEZZANINE
SCALE: 1/8" = 1'-0"
0 1' 2' 4' 8'
N TRUE NORTH

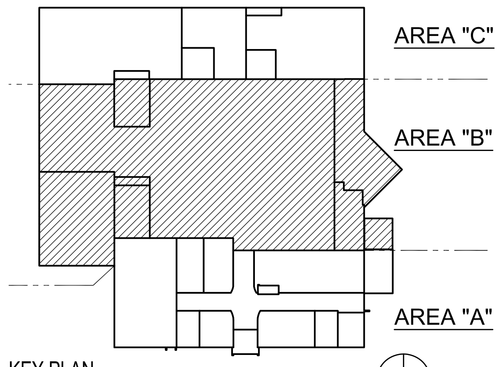

KEY PLAN
SCALE: N.T.S.
N TRUE NORTH

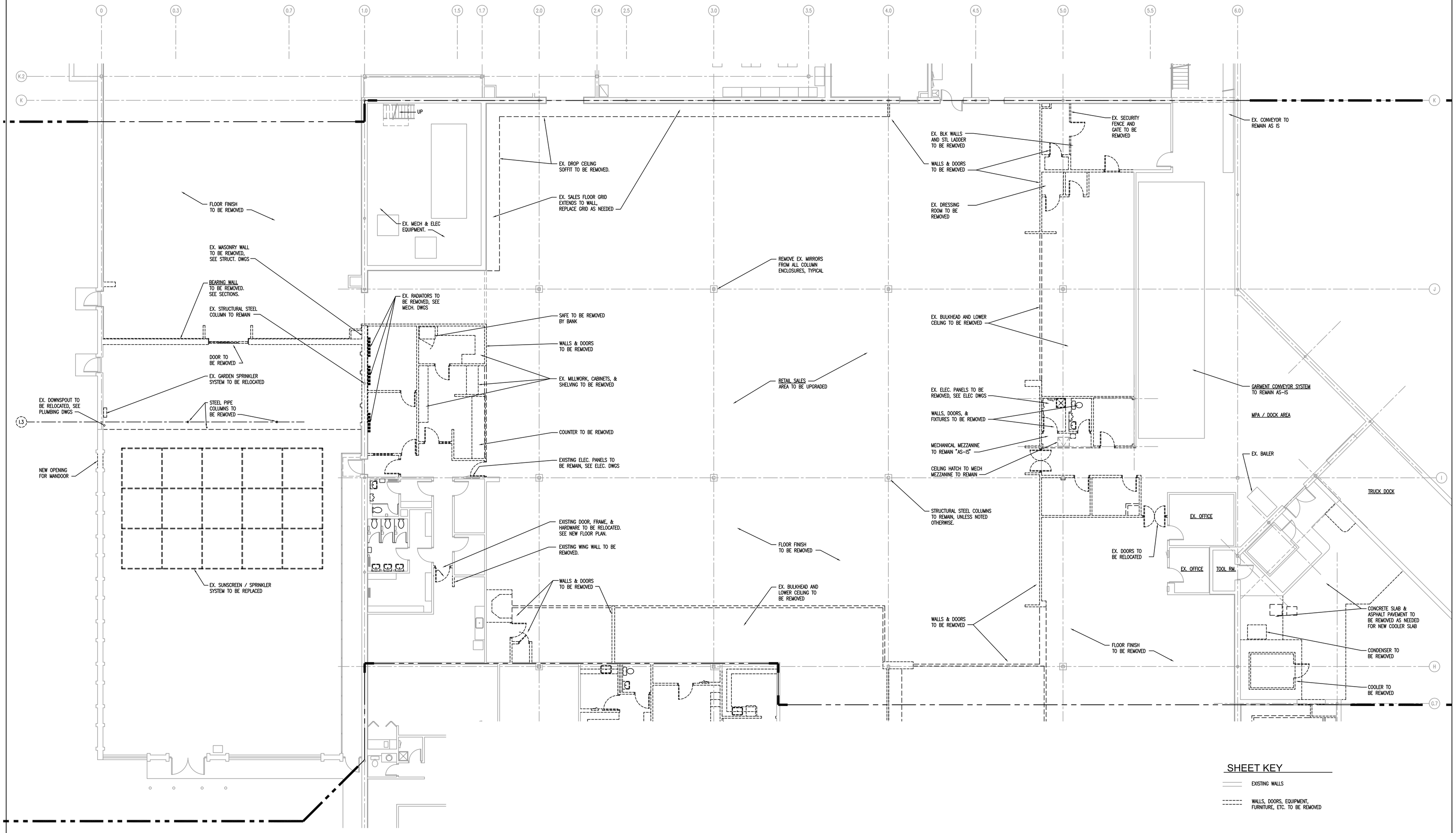

1 / D1.2 ENLARGED RETAIL SALES AREA DEMOLITION FLOOR PLAN
SCALE: 1/8" = 1'-0"
0 1' 2' 4' 8'
N TRUE NORTH

SHEET KEY

EXISTING WALLS

WALLS, DOORS, EQUIPMENT, FURNITURE, ETC. TO BE REMOVED

AREA "B"

DATES AND REVISIONS	
No.	Date/Description
	04.11.12 – BID

EXCHANGE™

RICHARD L. BOWEN + ASSOCIATES INC.
ARCHITECTS • ENGINEERS • CONSTRUCTION MANAGERS
13000 Shaker Boulevard / Cleveland, Ohio 44120
Phone: (216) 491-8300 Fax: (216) 491-8053
www.rlba.com - email@rlba.com

FT. MYER EXCHANGE
JBMHH - MYER
ARLINGTON, VIRGINIA

AREA "B"
DEMO PLAN

DRAWN BY: RTV
CHECKED BY: --
RLB NO.: 7800.02

DRAWING NO.
D1.2

P:\7800\7800.02 FT. MYER PX IMAGE UPGRADE CONST. CONTRACT DOCS\AREA\7800002_D01-02.DWG | PLOTTED 04.26.2012 03:59PM BY RYAN VANJO

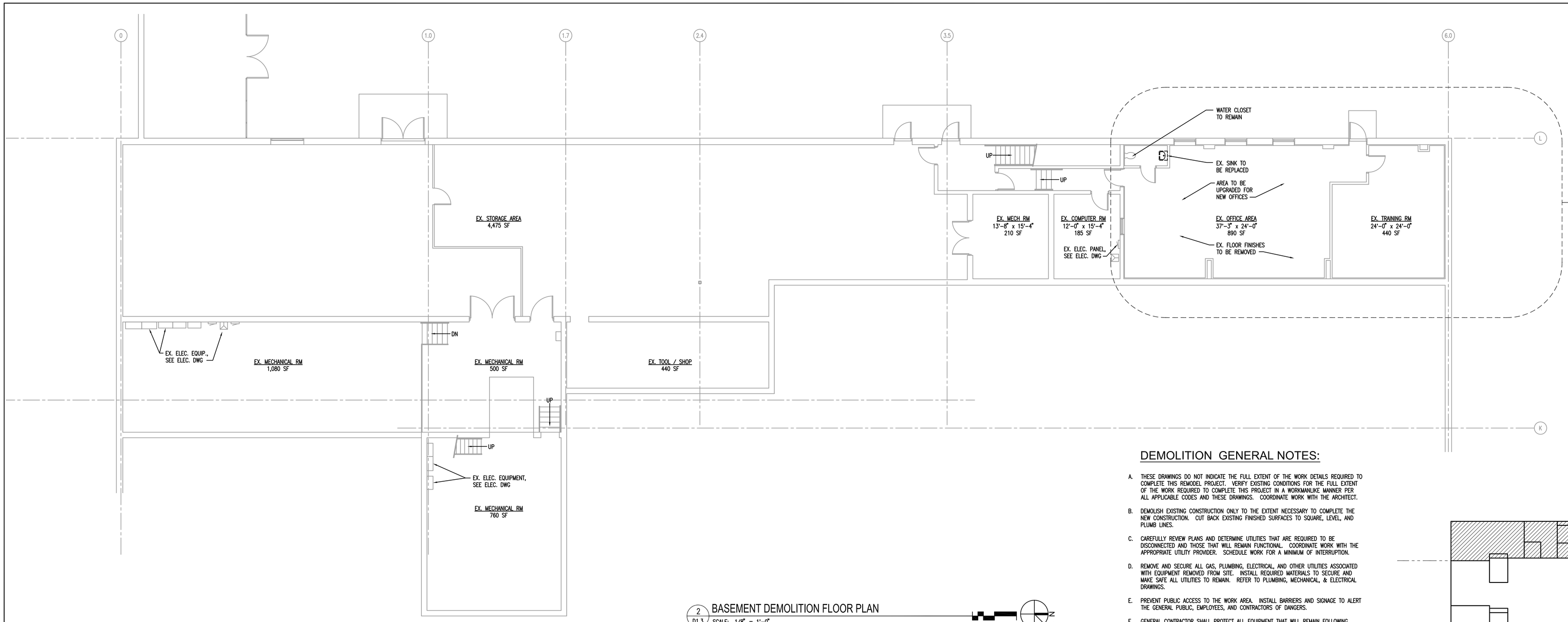

2 D1.3 BASEMENT DEMOLITION FLOOR PLAN
SCALE: 1/8" = 1'-0"

DEMOLITION GENERAL NOTES:

A. THESE DRAWINGS DO NOT INDICATE THE FULL EXTENT OF THE WORK DETAILS REQUIRED TO COMPLETE THIS REMODEL PROJECT. VERIFY EXISTING CONDITIONS FOR THE FULL EXTENT OF THE WORK REQUIRED TO COMPLETE THIS PROJECT IN A WORKMANLIKE MANNER PER ALL APPLICABLE CODES AND THESE DRAWINGS. COORDINATE WORK WITH THE ARCHITECT.

B. DEMOLISH EXISTING CONSTRUCTION ONLY TO THE EXTENT NECESSARY TO COMPLETE THE NEW CONSTRUCTION. CUT BACK EXISTING FINISHED SURFACES TO SQUARE, LEVEL, AND PLUMB LINES.

C. CAREFULLY REVIEW PLANS AND DETERMINE UTILITIES THAT ARE REQUIRED TO BE DISCONNECTED AND THOSE THAT WILL REMAIN FUNCTIONAL. COORDINATE WORK WITH THE APPROPRIATE UTILITY PROVIDER. SCHEDULE WORK FOR A MINIMUM OF INTERRUPTION.

D. REMOVE AND SECURE ALL GAS, PLUMBING, ELECTRICAL, AND OTHER UTILITIES ASSOCIATED WITH EQUIPMENT REMOVED FROM SITE. INSTALL REQUIRED MATERIALS TO SECURE AND MAKE SAFE ALL UTILITIES TO REMAIN. REFER TO PLUMBING, MECHANICAL, & ELECTRICAL DRAWINGS.

E. PREVENT PUBLIC ACCESS TO THE WORK AREA. INSTALL BARRIERS AND SIGNAGE TO ALERT THE GENERAL PUBLIC, EMPLOYEES, AND CONTRACTORS OF DANGERS.

F. GENERAL CONTRACTOR SHALL PROTECT ALL EQUIPMENT THAT WILL REMAIN FOLLOWING REMODEL BY PLACING IT IN STORAGE FOR THE DURATION OF THE PROJECT. COORDINATE WITH THE STORE MANAGER.

G. CONTRACTOR SHALL BE RESPONSIBLE FOR OBTAINING WORK PERMITS AND COMMUNICATING WITH UTILITY PROVIDER(S) PRIOR TO ANY WORK AFFECTING SERVICES. FIELD VERIFY LOCATION OF ALL SERVICES.

H. CONTRACTOR SHALL VERIFY w/ STORE MANAGER, PROJECT MANAGER & ARCHITECT ALL EQUIPMENT & FURNITURE TO BE REMOVED AND RELOCATED PRIOR TO COMMENCING WITH THE WORK.

I. ANY WALLS BEING PROPOSED FOR REMOVAL SHALL BE CONFIRMED BY THE CONTRACTOR AS BEING NON-LOAD BEARING BEFORE PROCEEDING WITH REMOVAL. IF LOAD-BEARING WALL(S) ARE FOUND DUE TO UNFORESEEN CONDITIONS, IT SHOULD BE BROUGHT DIRECTLY TO THE ARCHITECT'S ATTENTION BEFORE PROCEEDING WITH THE REMOVAL OF THAT WALL. NOTE: THE ARCHITECT HAS MADE ASSUMPTIONS BASED ON PREVIOUS DRAWINGS AND THE EXISTING CONDITIONS THAT ARE VIEWABLE. HE HAS USED HIS BEST JUDGMENT TO DETERMINE ALL LOAD-BEARING WALLS.

AREA "C"

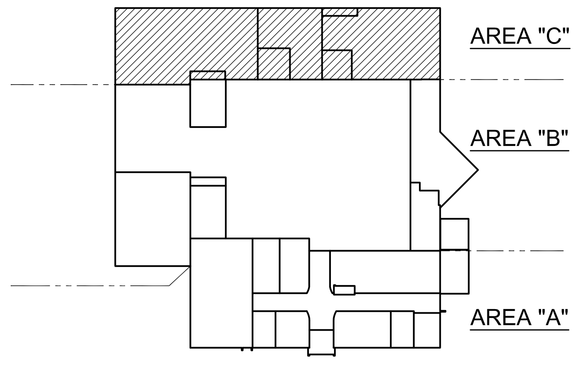

KEY PLAN
SCALE: N.T.S.

SHEET KEY

EXISTING WALLS

WALLS, DOORS, EQUIPMENT, FURNITURE, ETC. TO BE REMOVED

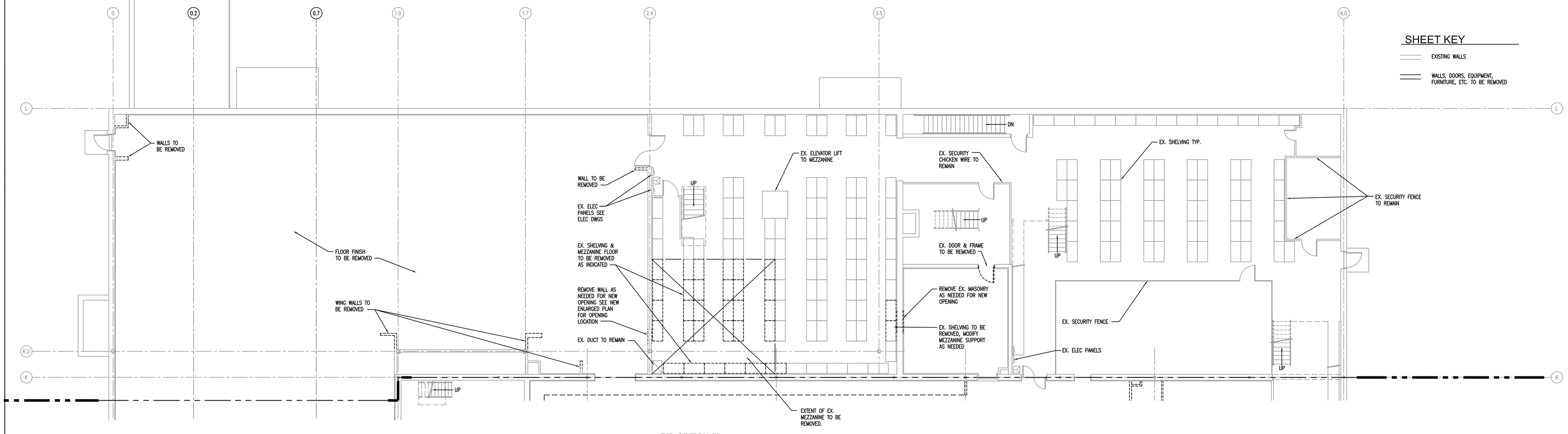

1 D1.3 BID OPTION #2
ENLARGED MCSS & MPA DEMOLITION FLOOR PLAN
SCALE: 1/8" = 1'-0"

AREA "C"

DATES AND REVISIONS	
No.	Date/Description
	04.11.12 – BID

EXCHANGE™

RICHARD L. BOWEN + ASSOCIATES INC.
13000 Shaker Boulevard / Cleveland, Ohio 44120
Phone: (216) 491-9300 Fax: (216) 491-9303
www.rlba.com - email@rlba.com

FT. MYER EXCHANGE
JBMHH - MYER
ARLINGTON, VIRGINIA

AREA "C"
DEMO PLAN

DRAWN BY: RTV
CHECKED BY: --
RLB NO.: 7800.02

DRAWING NO. D1.3

P:\7800\7800.02 FT. MYER PX IMAGE UPGRADE CONST. CONTRACT DOCS\ARCH\780002_D01-03.DWG | PLOTTED 04.26.2012 04:00PM BY RYAN WANJO

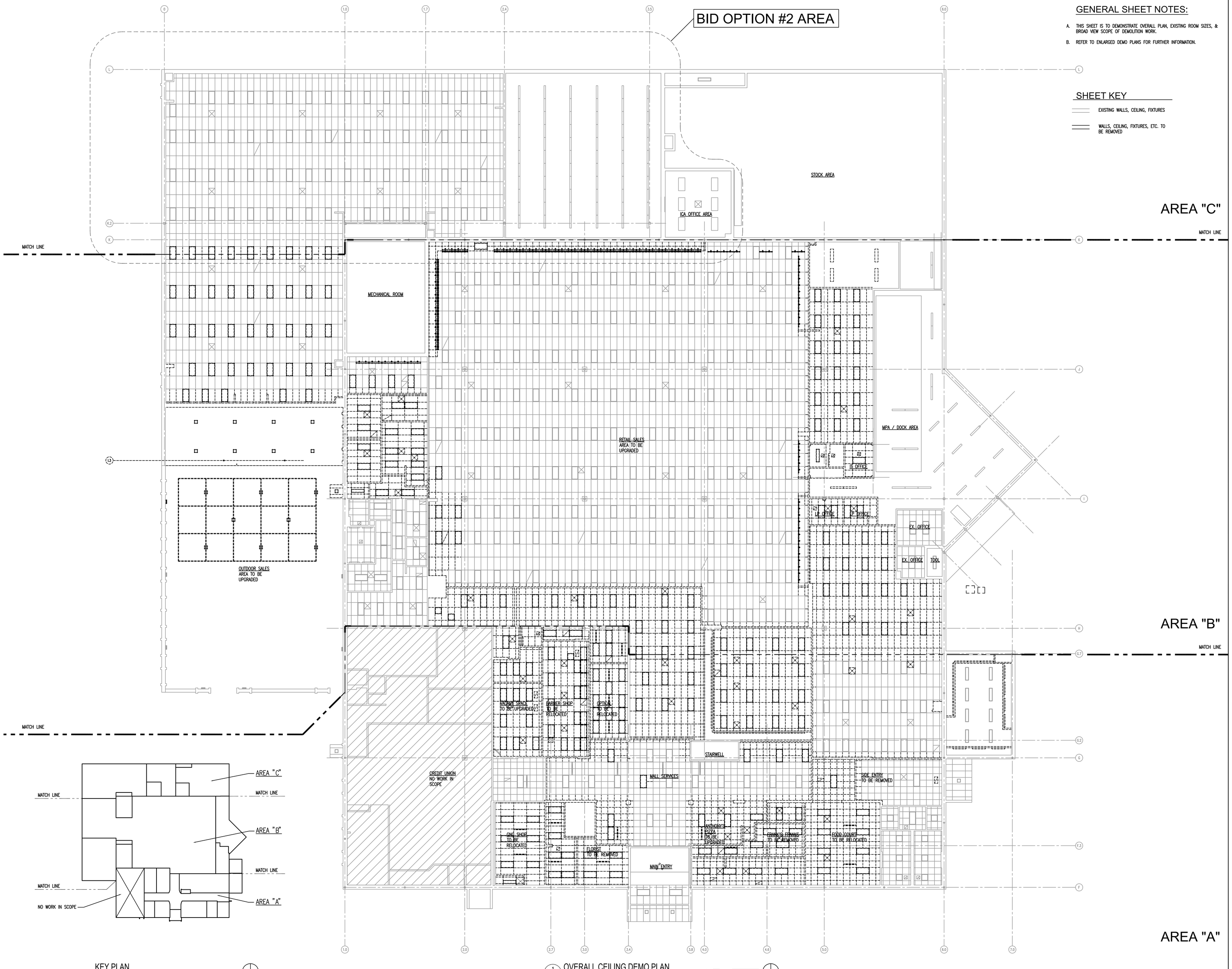

KEY PLAN
SCALE: NTS

1 D9.0 OVERALL CEILING DEMO PLAN
SCALE: 3/32" = 1'-0"

GENERAL SHEET NOTES:

A. THIS SHEET IS TO DEMONSTRATE OVERALL PLAN, EXISTING ROOM SIZES, & BROAD VIEW SCOPE OF DEMOLITION WORK.

B. REFER TO ENLARGED DEMO PLANS FOR FURTHER INFORMATION.

SHEET KEY

EXISTING WALLS, CEILING, FIXTURES

WALLS, CEILING, FIXTURES, ETC. TO BE REMOVED

DATES AND REVISIONS	
No.	Date/Description
	04.11.12 – BID

EXCHANGE™

RICHARD L. BOWEN + ASSOCIATES INC.
13000 Shaker Boulevard / Cleveland, Ohio 44120
Phone: (216) 491-8300 Fax: (216) 491-8053
www.rlba.com - email@rlba.com

FT. MYER EXCHANGE
JBMHH - MYER
ARLINGTON, VIRGINIA

DEMO REFLECTED CEILING PLAN

DRAWN BY: RTV
CHECKED BY: --
RLB NO.: 7800.02

DRAWING NO.
D9.0

P:\7800\7800.02 FT. MYER PX IMAGE UPGRADE CONST. CONTRACT DOCS\ARCH\780002_D09-00.DWG | PLOTTED 04.09.2012 09:58AM BY ANDREW HENLEY

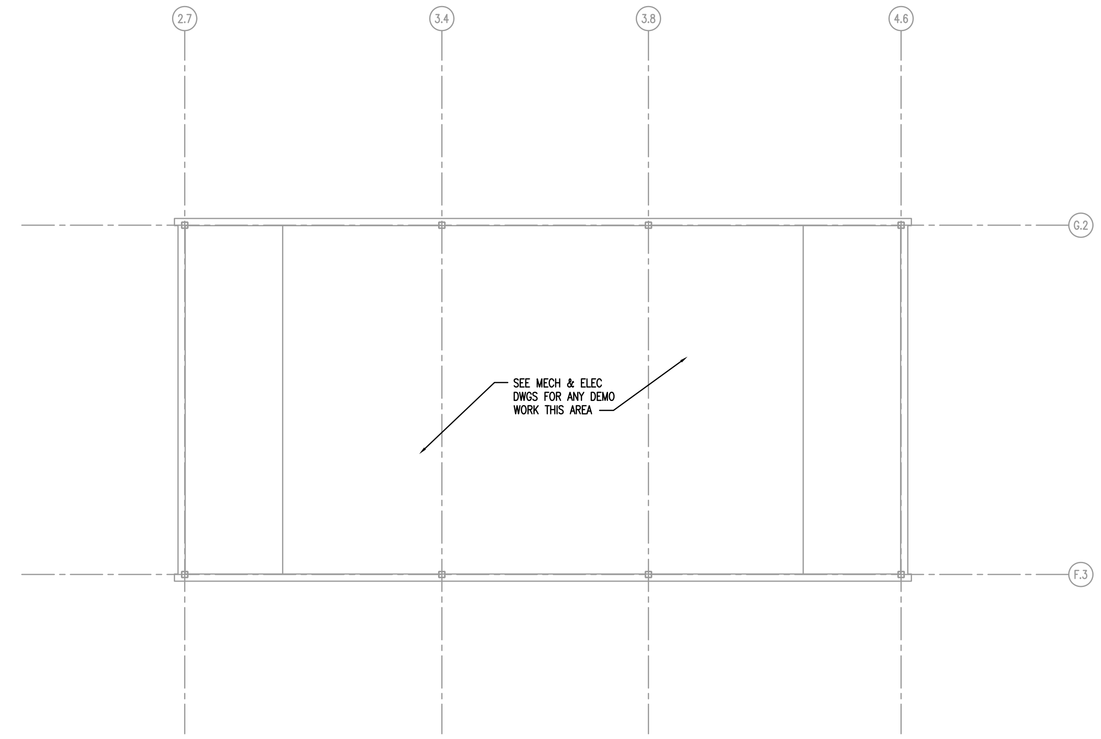

2 / D9.1 MECHANICAL PENTHOUSE DEMOLTION REFLECTED CEILING PLAN
SCALE: 1/8" = 1'-0"

0 1' 2' 4' 8'

N TRUE NORTH

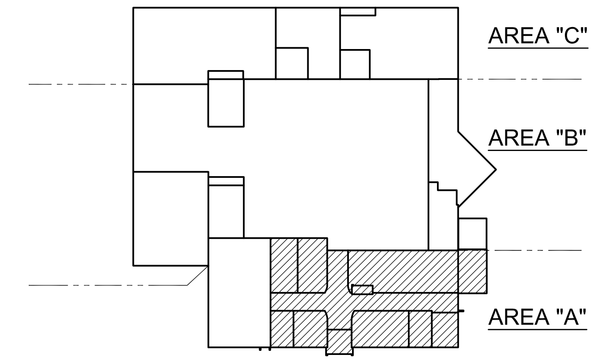

KEY PLAN
SCALE: N.T.S.

N TRUE NORTH

REFLECTED CEILING PLAN LEGEND:

- GYPSUM BOARD CEILING SEE DETAILS THIS SHEET FOR FRAMING.
- ACOUSTICAL CEILING TILE:
- EXIT SIGN / EMERGENCY LIGHT COMBO
- SUPPLY DIFFUSER
- RETURN AIR GRILLE
- EXHAUST FAN
- EMERGENCY LIGHT
- EXIT SIGN
- 2x4 RECESSED FLUORESCENT FIXTURE
- 1x4 SURFACE MOUNT FLUORESCENT FIXTURE
- FLUORESCENT WALL SCONCE FIXTURE
- 4' NARROW STRIP FLUORESCENT FIXTURE
- RECESSED DOWNLIGHT

CEILING DEMOLITION NOTES:

1. LIGHT FIXTURES ARE TO BE RE-USED, SEE ELECTRICAL DRAWINGS.
2. SPRINKLER HEADS ARE TO BE ADJUSTED AS PER NEW LAYOUT. REFER TO DRAWINGS PREPARED BY SYSTEM SYSTEM DESIGN PROFESSIONAL.

DEMOLITION GENERAL NOTES:

A. THESE DRAWINGS DO NOT INDICATE THE FULL EXTENT OF THE WORK DETAILS REQUIRED TO COMPLETE THIS REMODEL PROJECT. VERIFY EXISTING CONDITIONS FOR THE FULL EXTENT OF THE WORK REQUIRED TO COMPLETE THIS PROJECT IN A WORKMANLIKE MANNER PER ALL APPLICABLE CODES AND THESE DRAWINGS. COORDINATE WORK WITH THE ARCHITECT.

B. DEMOLISH EXISTING CONSTRUCTION ONLY TO THE EXTENT NECESSARY TO COMPLETE THE NEW CONSTRUCTION. CUT BACK EXISTING FINISHED SURFACES TO SQUARE, LEVEL, AND PLUMB LINES.

C. CAREFULLY REVIEW PLANS AND DETERMINE UTILITIES THAT ARE REQUIRED TO BE DISCONNECTED AND THOSE THAT WILL REMAIN FUNCTIONAL. COORDINATE WORK WITH THE APPROPRIATE UTILITY PROVIDER. SCHEDULE WORK FOR A MINIMUM OF INTERRUPTION.

D. REMOVE AND SECURE ALL GAS, PLUMBING, ELECTRICAL, AND OTHER UTILITIES ASSOCIATED WITH EQUIPMENT REMOVED FROM SITE. INSTALL REQUIRED MATERIALS TO SECURE AND MAKE SAFE ALL UTILITIES TO REMAIN. REFER TO PLUMBING, MECHANICAL, & ELECTRICAL DRAWINGS.

E. PREVENT PUBLIC ACCESS TO THE WORK AREA. INSTALL BARRIERS AND SIGNAGE TO ALERT THE GENERAL PUBLIC, EMPLOYEES, AND CONTRACTORS OF DANGERS.

F. GENERAL CONTRACTOR SHALL PROTECT ALL EQUIPMENT THAT WILL REMAIN FOLLOWING REMODEL BY PLACING IT IN STORAGE FOR THE DURATION OF THE PROJECT. COORDINATE WITH THE STORE MANAGER.

G. CONTRACTOR SHALL BE RESPONSIBLE FOR OBTAINING WORK PERMITS AND COMMUNICATING WITH UTILITY PROVIDER(S) PRIOR TO ANY WORK AFFECTING SERVICES. FIELD VERIFY LOCATION OF ALL SERVICES.

H. CONTRACTOR SHALL VERIFY w/ STORE MANAGER, PROJECT MANAGER, & ARCHITECT ALL EQUIPMENT & FURNITURE TO BE REMOVED AND RELOCATED PRIOR TO COMMENCING WITH THE WORK.

I. ANY WALLS BEING PROPOSED FOR REMOVAL SHALL BE CONFIRMED BY THE CONTRACTOR AS BEING NON-LOAD BEARING BEFORE PROCEEDING WITH REMOVAL. IF LOAD-BEARING WALL(S) ARE FOUND DUE TO UNFORESEEN CONDITIONS, IT SHOULD BE BROUGHT DIRECTLY TO THE ARCHITECT'S ATTENTION BEFORE PROCEEDING WITH THE REMOVAL OF THAT WALL. NOTE: THE ARCHITECT HAS MADE ASSUMPTIONS BASED ON PREVIOUS DRAWINGS AND THE EXISTING CONDITIONS THAT ARE VIEWABLE. HE HAS USED HIS BEST JUDGMENT TO DETERMINE ALL LOAD-BEARING WALLS.

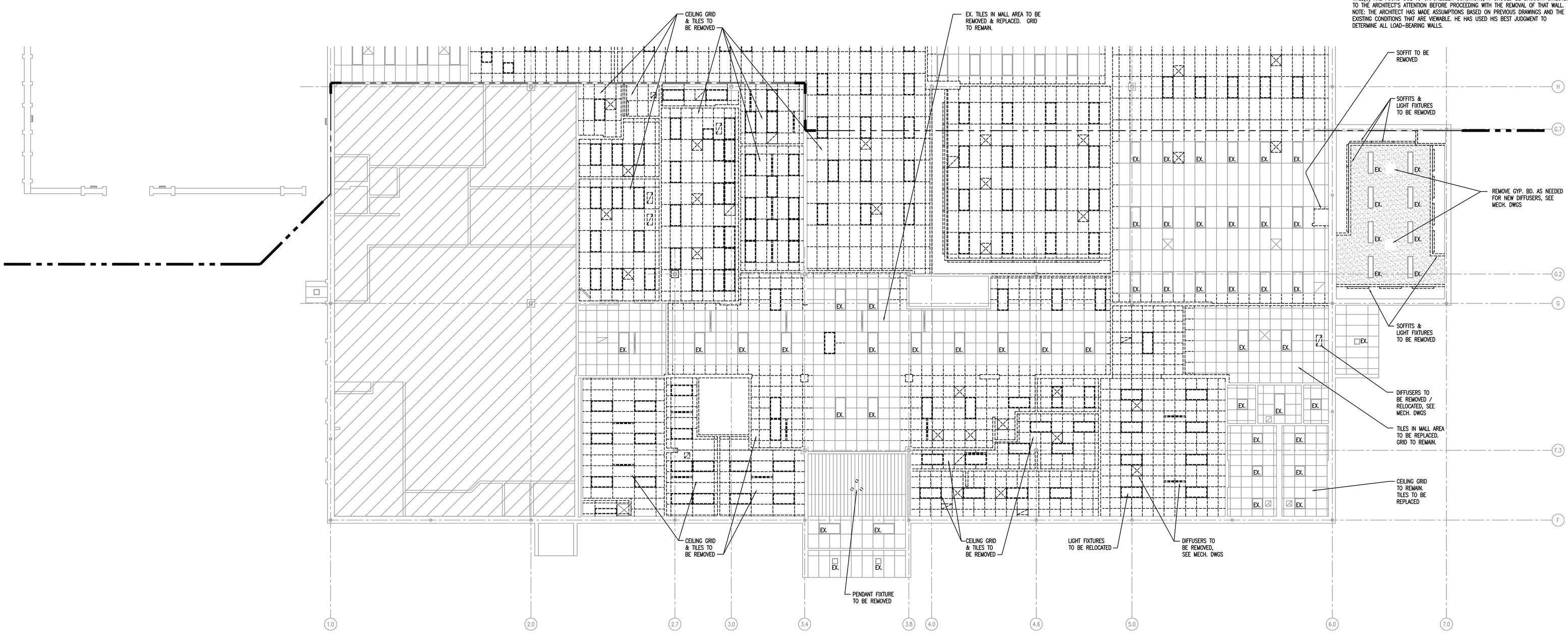

1 / D9.1 ENLARGED MALL & FOOD COURT DEMOLITION REFLECTED CEILING PLAN
SCALE: 1/8" = 1'-0"

0 1' 2' 4' 8'

N TRUE NORTH

SHEET KEY

- EXISTING WALLS
- WALLS, DOORS, EQUIPMENT, FURNITURE, ETC. TO BE REMOVED

AREA "A"

DATES AND REVISIONS	
No.	Date/Description
	04.11.12 – BID

EXCHANGE™

RICHARD L. BOWEN + ASSOCIATES INC.
ARCHITECTS • ENGINEERS • CONSTRUCTION MANAGERS
13000 Shaker Boulevard / Cleveland, Ohio 44120
Phone: (216) 491-9300 Fax: (216) 491-8053
www.rlba.com - email@rlba.com

FT. MYER EXCHANGE
JBMHH - MYER
ARLINGTON, VIRGINIA

AREA "A"
DEMO REFLECTED CEILING PLAN

DRAWN BY:	RTV
CHECKED BY:	--
RLB NO.:	7800.02

DRAWING NO.
D9.1

P:\7800\7800.02 FT. MYER PX IMAGE UPGRADE CONST. CONTRACT DOCS\AREA\7800002_D09-01.DWG | PLOTTED 04.26.2012 04:07PM BY RYAN VANJO

REFLECTED CEILING PLAN LEGEND:

- GYPSUM BOARD CEILING SEE DETAILS THIS SHEET FOR FRAMING.
- ACOUSTICAL CEILING TILE:
- EXIT SIGN / EMERGENCY LIGHT COMBO
- SUPPLY DIFFUSER
- RETURN AIR GRILLE
- EXHAUST FAN
- EMERGENCY LIGHT
- EXIT SIGN
- 2x4 RECESSED FLUORESCENT FIXTURE
- 1x4 SURFACE MOUNT FLUORESCENT FIXTURE
- FLUORESCENT WALL SCONCE FIXTURE
- 4" NARROW STRIP FLUORESCENT FIXTURE
- RECESSED DOWNLIGHT

DEMOLITION GENERAL NOTES:

A. THESE DRAWINGS DO NOT INDICATE THE FULL EXTENT OF THE WORK DETAILS REQUIRED TO COMPLETE THIS REMODEL PROJECT. VERIFY EXISTING CONDITIONS FOR THE FULL EXTENT OF THE WORK REQUIRED TO COMPLETE THIS PROJECT IN A WORKMANLIKE MANNER PER ALL APPLICABLE CODES AND THESE DRAWINGS. COORDINATE WORK WITH THE ARCHITECT.

B. DEMOLISH EXISTING CONSTRUCTION ONLY TO THE EXTENT NECESSARY TO COMPLETE THE NEW CONSTRUCTION. CUT BACK EXISTING FINISHED SURFACES TO SQUARE, LEVEL, AND PLUMB LINES.

C. CAREFULLY REVIEW PLANS AND DETERMINE UTILITIES THAT ARE REQUIRED TO BE DISCONNECTED AND THOSE THAT WILL REMAIN FUNCTIONAL. COORDINATE WORK WITH THE APPROPRIATE UTILITY PROVIDER. SCHEDULE WORK FOR A MINIMUM OF INTERRUPTION.

D. REMOVE AND SECURE ALL GAS, PLUMBING, ELECTRICAL, AND OTHER UTILITIES ASSOCIATED WITH EQUIPMENT REMOVED FROM SITE. INSTALL REQUIRED MATERIALS TO SECURE AND MAKE SAFE ALL UTILITIES TO REMAIN. REFER TO PLUMBING, MECHANICAL, AND ELECTRICAL DRAWINGS.

E. PREVENT PUBLIC ACCESS TO THE WORK AREA. INSTALL BARRIERS AND SIGNAGE TO ALERT THE GENERAL PUBLIC, EMPLOYEES, AND CONTRACTORS OF DANGERS.

F. GENERAL CONTRACTOR SHALL PROTECT ALL EQUIPMENT THAT WILL REMAIN FOLLOWING REMODEL BY PLACING IT IN STORAGE FOR THE DURATION OF THE PROJECT. COORDINATE WITH THE STORE MANAGER.

G. CONTRACTOR SHALL BE RESPONSIBLE FOR OBTAINING WORK PERMITS AND COMMUNICATING WITH UTILITY PROVIDER(S) PRIOR TO ANY WORK AFFECTING SERVICES. FIELD VERIFY LOCATION OF ALL SERVICES.

H. CONTRACTOR SHALL VERIFY w/ STORE MANAGER, PROJECT MANAGER, & ARCHITECT ALL EQUIPMENT & FURNITURE TO BE REMOVED AND RELOCATED PRIOR TO COMMENCING WITH THE WORK.

I. ANY WALLS BEING PROPOSED FOR REMOVAL SHALL BE CONFIRMED BY THE CONTRACTOR AS BEING NON-LOAD BEARING BEFORE PROCEEDING WITH REMOVAL. IF LOAD-BEARING WALL(S) ARE FOUND DUE TO UNFORESEEN CONDITIONS, IT SHOULD BE BROUGHT DIRECTLY TO THE ARCHITECT'S ATTENTION BEFORE PROCEEDING WITH THE REMOVAL OF THAT WALL. NOTE: THE ARCHITECT HAS MADE ASSUMPTIONS BASED ON PREVIOUS DRAWINGS AND THE EXISTING CONDITIONS THAT ARE VIEWABLE. HE HAS USED HIS BEST JUDGMENT TO DETERMINE ALL LOAD-BEARING WALLS.

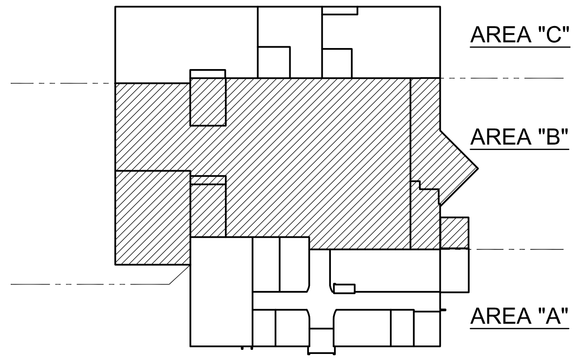

KEY PLAN
SCALE: N.T.S.

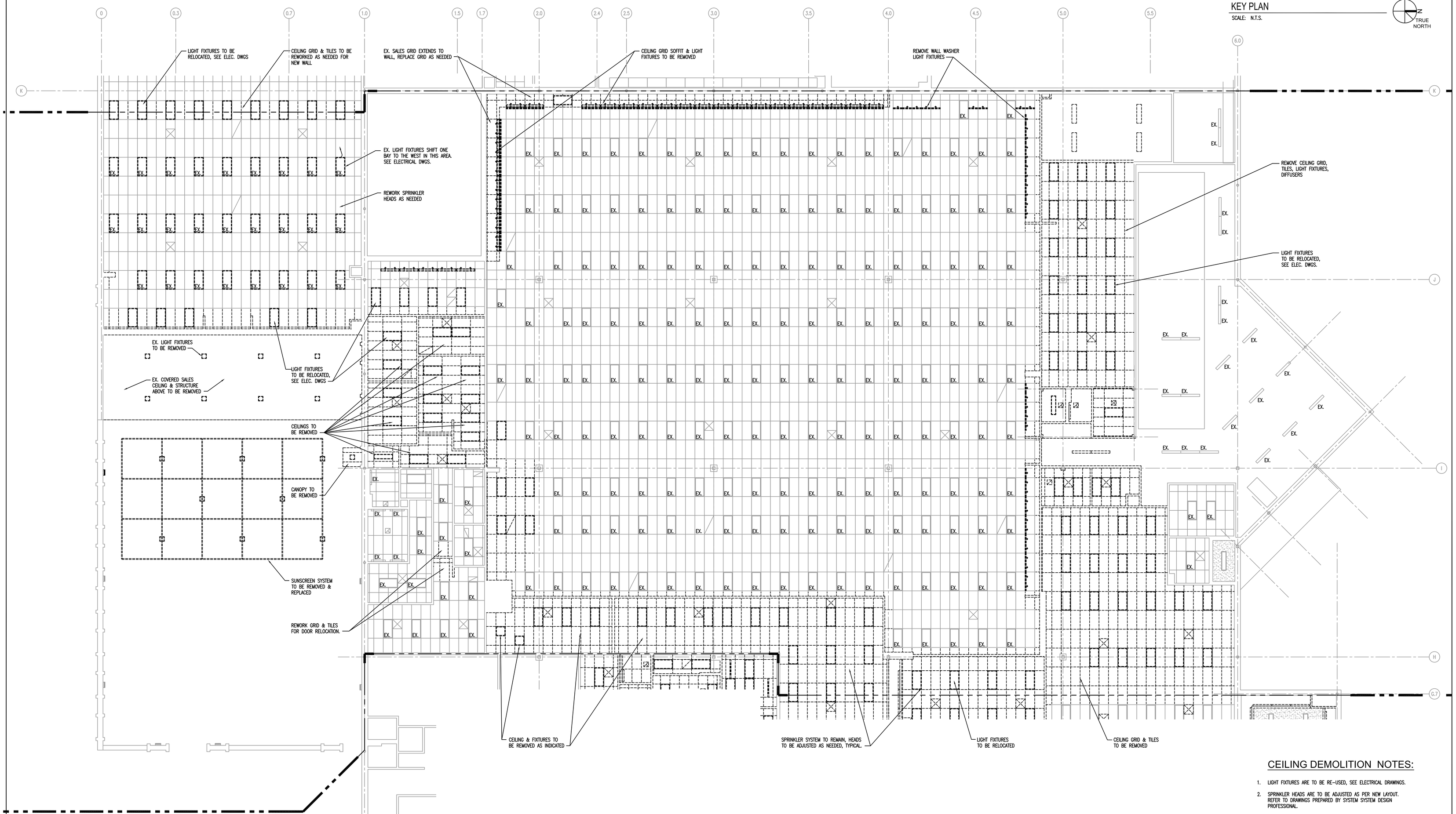

CEILING DEMOLITION NOTES:

1. LIGHT FIXTURES ARE TO BE RE-USED, SEE ELECTRICAL DRAWINGS.
2. SPRINKLER HEADS ARE TO BE ADJUSTED AS PER NEW LAYOUT. REFER TO DRAWINGS PREPARED BY SYSTEM SYSTEM DESIGN PROFESSIONAL.

SHEET KEY

- EXISTING WALLS
- WALLS, DOORS, EQUIPMENT, FURNITURE, ETC. TO BE REMOVED

1 / D9.2 ENLARGED RETAIL SALES AREA DEMOLITION REFLECTED CEILING PLAN
SCALE: 1/8" = 1'-0"

0 1' 2' 4' 8'

TRUE NORTH

AREA "B"

DATES AND REVISIONS	
No.	Date/Description
	04.11.12 – BID

EXCHANGE™

RICHARD L. BOWEN + ASSOCIATES INC.
13000 Shaker Boulevard / Cleveland, Ohio 44120
Phone: (216) 491-9300 Fax: (216) 491-9053
www.rlba.com - email@rlba.com

FT. MYER EXCHANGE
JBMHH - MYER
ARLINGTON, VIRGINIA

AREA "B"
DEMO REFLECTED CEILING PLAN

DRAWN BY: RTV
CHECKED BY: ---
RLB NO.: 7800.02

DRAWING NO. D9.2

P:\7800\7800.02 FT. MYER PX IMAGE UPGRADE CONST. CONTRACT DOCS\ARCH\7800D2_D09-02.DWG | PLOTTED 04-26-2012 04:12PM BY RYAN IWANO

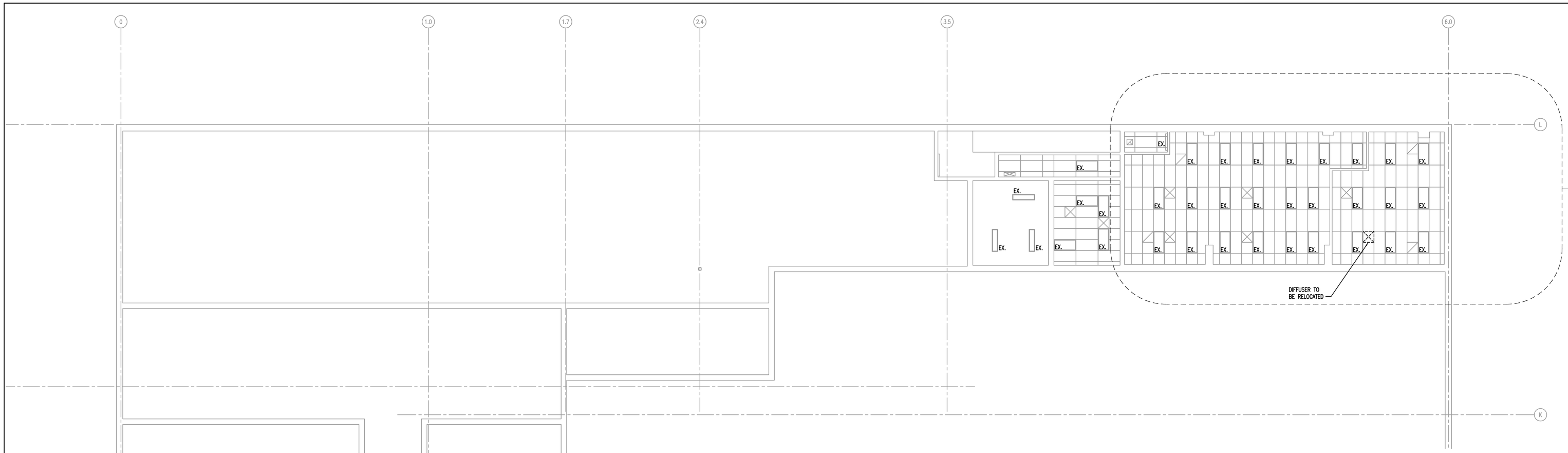

AREA "C"

DEMOLITION GENERAL NOTES:

A. THESE DRAWINGS DO NOT INDICATE THE FULL EXTENT OF THE WORK DETAILS REQUIRED TO COMPLETE THIS REMODEL PROJECT. VERIFY EXISTING CONDITIONS FOR THE FULL EXTENT OF THE WORK REQUIRED TO COMPLETE THIS PROJECT IN A WORKMANLIKE MANNER PER ALL APPLICABLE CODES AND THESE DRAWINGS. COORDINATE WORK WITH THE ARCHITECT.

B. DEMOLISH EXISTING CONSTRUCTION ONLY TO THE EXTENT NECESSARY TO COMPLETE THE NEW CONSTRUCTION. CUT BACK EXISTING FINISHED SURFACES TO SQUARE, LEVEL, AND PLUMB LINES.

C. CAREFULLY REVIEW PLANS AND DETERMINE UTILITIES THAT ARE REQUIRED TO BE DISCONNECTED AND THOSE THAT WILL REMAIN FUNCTIONAL. COORDINATE WORK WITH THE APPROPRIATE UTILITY PROVIDER. SCHEDULE WORK FOR A MINIMUM OF INTERRUPTION.

D. REMOVE AND SECURE ALL GAS, PLUMBING, ELECTRICAL, AND OTHER UTILITIES ASSOCIATED WITH EQUIPMENT REMOVED FROM SITE. INSTALL REQUIRED MATERIALS TO SECURE AND MAKE SAFE ALL UTILITIES TO REMAIN. REFER TO PLUMBING, MECHANICAL, AND ELECTRICAL DRAWINGS.

E. PREVENT PUBLIC ACCESS TO THE WORK AREA. INSTALL BARRIERS AND SIGNAGE TO ALERT THE GENERAL PUBLIC, EMPLOYEES, AND CONTRACTORS OF DANGERS.

F. GENERAL CONTRACTOR SHALL PROTECT ALL EQUIPMENT THAT WILL REMAIN FOLLOWING REMODEL BY PLACING IT IN STORAGE FOR THE DURATION OF THE PROJECT. COORDINATE WITH THE STORE MANAGER.

G. CONTRACTOR SHALL BE RESPONSIBLE FOR OBTAINING WORK PERMITS AND COMMUNICATING WITH UTILITY PROVIDER(S) PRIOR TO ANY WORK AFFECTING SERVICES. FIELD VERIFY LOCATION OF ALL SERVICES.

H. CONTRACTOR SHALL VERIFY w/ STORE MANAGER, PROJECT MANAGER, & ARCHITECT ALL EQUIPMENT & FURNITURE TO BE REMOVED AND RELOCATED PRIOR TO COMMENCING WITH THE WORK.

I. ANY WALLS BEING PROPOSED FOR REMOVAL SHALL BE CONFIRMED BY THE CONTRACTOR AS BEING NON-LOAD BEARING BEFORE PROCEEDING WITH REMOVAL. IF LOAD-BEARING WALL(S) ARE FOUND DUE TO UNFORESEEN CONDITIONS, IT SHOULD BE BROUGHT DIRECTLY TO THE ARCHITECT'S ATTENTION BEFORE PROCEEDING WITH THE REMOVAL OF THAT WALL. NOTE: THE ARCHITECT HAS MADE ASSUMPTIONS BASED ON PREVIOUS DRAWINGS AND THE EXISTING CONDITIONS THAT ARE VIEWABLE. HE HAS USED HIS BEST JUDGMENT TO DETERMINE ALL LOAD-BEARING WALLS.

REFLECTED CEILING PLAN LEGEND:

- GYPSUM BOARD CEILING SEE DETAILS THIS SHEET FOR FRAMING.
- ACOUSTICAL CEILING TILE:
- EXIT SIGN / EMERGENCY LIGHT COMBO
- SUPPLY DIFFUSER
- RETURN AIR GRILLE
- EXHAUST FAN
- EMERGENCY LIGHT
- EXIT SIGN
- 2x4 RECESSED FLUORESCENT FIXTURE
- 1x4 SURFACE MOUNT FLUORESCENT FIXTURE
- FLUORESCENT WALL SCONCE FIXTURE
- 4' NARROW STRIP FLUORESCENT FIXTURE
- RECESSED DOWNLIGHT

2 / D9.3 BASEMENT DEMOLITION REFLECTED CEILING PLAN
SCALE: 1/8" = 1'-0"

0 1' 2' 4' 8' TRUE NORTH

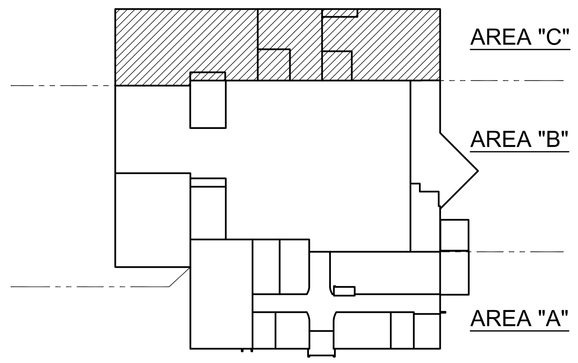

KEY PLAN
SCALE: N.T.S.

TRUE NORTH

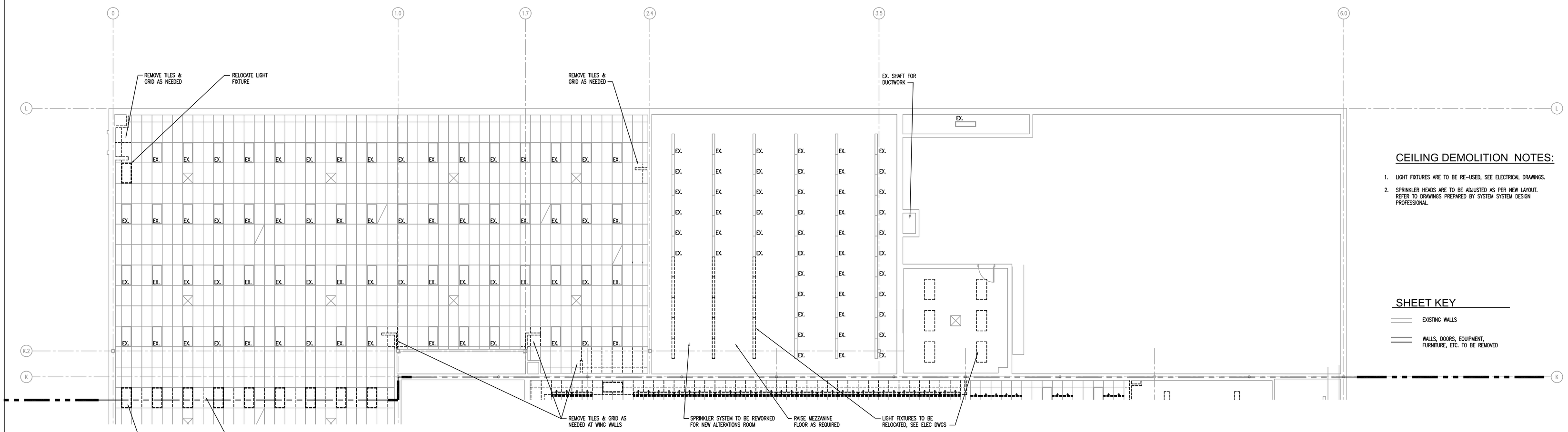

1 / D9.3 BID OPTION #2
ENLARGED MCSS & MPA DEMOLITION REFLECTED CEILING PLAN
SCALE: 1/8" = 1'-0"

0 1' 2' 4' 8' TRUE NORTH

CEILING DEMOLITION NOTES:

1. LIGHT FIXTURES ARE TO BE RE-USED, SEE ELECTRICAL DRAWINGS.
2. SPRINKLER HEADS ARE TO BE ADJUSTED AS PER NEW LAYOUT. REFER TO DRAWINGS PREPARED BY SYSTEM SYSTEM DESIGN PROFESSIONAL.

SHEET KEY

- EXISTING WALLS
- WALLS, DOORS, EQUIPMENT, FURNITURE, ETC. TO BE REMOVED

AREA "C"

DATES AND REVISIONS	
No.	Date/Description
	04.11.12 – BID

EXCHANGE™

RICHARD L. BOWEN + ASSOCIATES INC.
ARCHITECTS • ENGINEERS • CONSTRUCTION MANAGERS
13000 Shaker Boulevard / Cleveland, Ohio 44120
Phone: (216) 491-9300 Fax: (216) 491-9053
www.rlba.com - email@rlba.com

FT. MYER EXCHANGE
JBMHH - MYER
ARLINGTON, VIRGINIA

AREA "C"
DEMO REFLECTED CEILING PLAN

DRAWN BY: RTV
CHECKED BY: ---
RLB NO.: 7800.02

DRAWING NO. D9.3

P:\7800\7800.02 FT. MYER PX IMAGE UPGRADE CONST. CONTRACT DOCS\ARCH\7800D2_D09-03.DWG | PLOTTED 04-26-2012 04:13PM BY RYAN WANJO

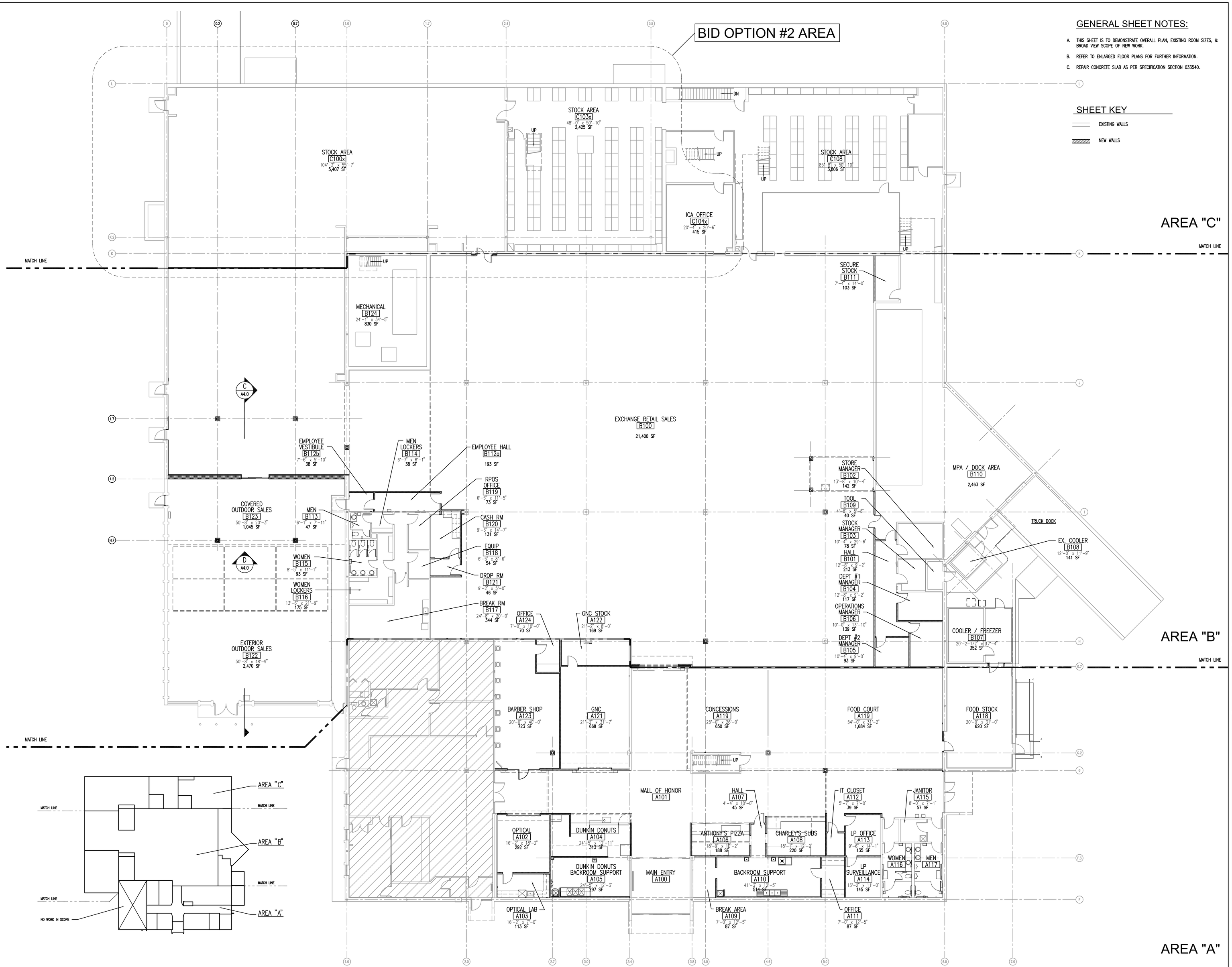

GENERAL SHEET NOTES:

A. THIS SHEET IS TO DEMONSTRATE OVERALL PLAN, EXISTING ROOM SIZES, & BROAD VIEW SCOPE OF NEW WORK.

B. REFER TO ENLARGED FLOOR PLANS FOR FURTHER INFORMATION.

C. REPAIR CONCRETE SLAB AS PER SPECIFICATION SECTION 033540.

SHEET KEY

EXISTING WALLS

NEW WALLS

KEY PLAN

SCALE: NTS

1 / A1.0 OVERALL FLOOR PLAN

SCALE: 3/32" = 1'-0"

0 2' 4' 8' 16'

TRUE NORTH

DATES AND REVISIONS	
No.	Date/Description
	04.11.12 – BID

EXCHANGE™

RICHARD L. BOWEN + ASSOCIATES INC.
13900 Shaker Boulevard / Cleveland, Ohio 44120
Phone: (216) 491-9300 Fax: (216) 491-9053
www.rlba.com - email@rlba.com

FT. MYER EXCHANGE
JBMHH - MYER
ARLINGTON, VIRGINIA

OVERALL FLOOR PLAN

DRAWN BY: RTV

CHECKED BY: --

RLB NO.: 7800.02

DRAWING NO.
A1.0

P:\7800\7800.02 FT. MYER PX IMAGE UPGRADE CONST. CONTRACT DOCS\ARCH\780002_A01-00.DWG | PLOTTED 04.09.2012 09:20AM BY ANDREW HENLEY

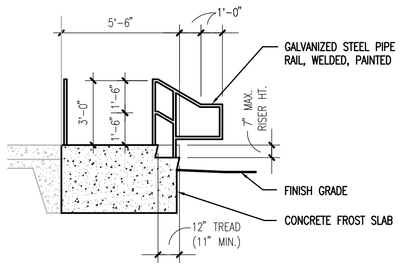

C A1.1 STAIR ELEVATION
SCALE: 1/4" = 1'-0"

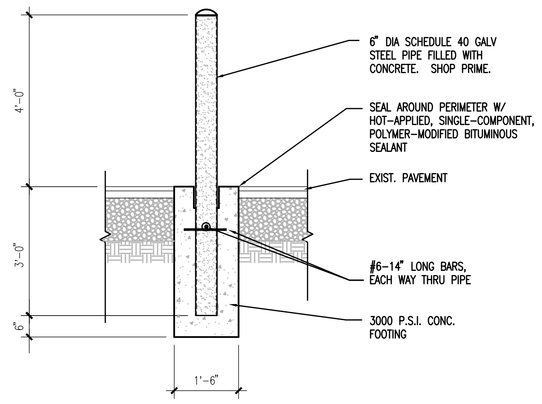

3 A1.1 EXTERIOR BOLLARD DETAIL
SCALE: 1/2" = 1'-0"

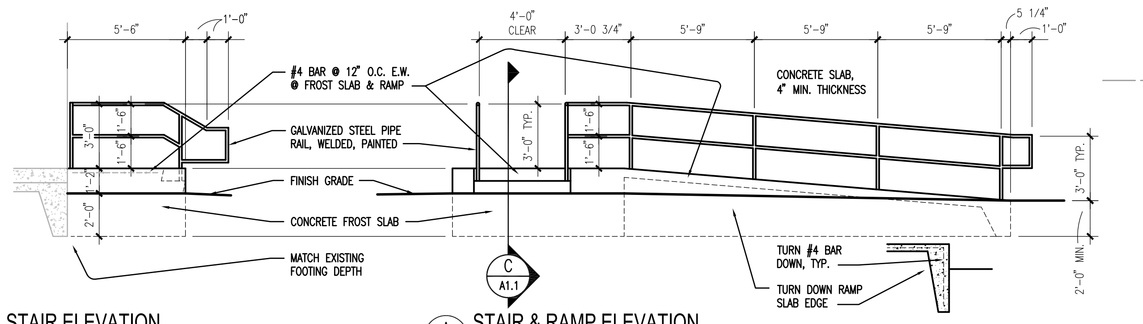

B A1.1 STAIR ELEVATION
SCALE: 1/4" = 1'-0"

A A1.1 STAIR & RAMP ELEVATION
SCALE: 1/4" = 1'-0"

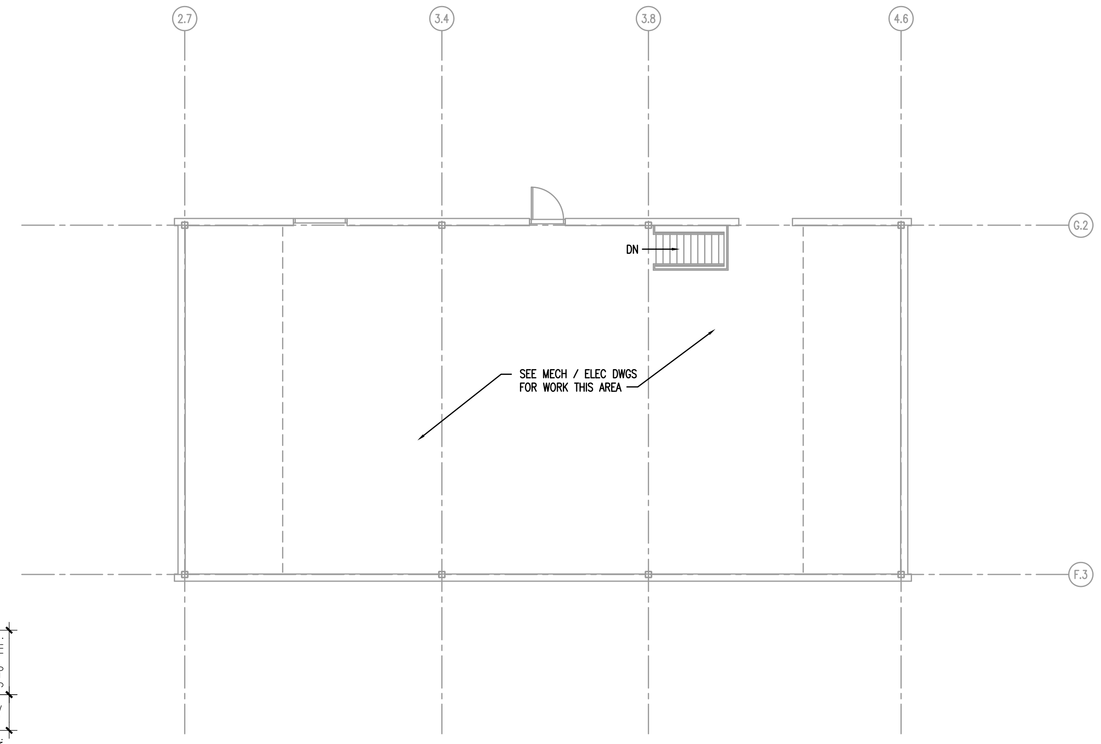

2 A1.1 MECHANICAL PENTHOUSE FLOOR PLAN
SCALE: 1/8" = 1'-0"

SHEET KEY

- EXISTING WALLS
- NEW INTERIOR METAL STUD WALLS – SEE WALL TYPES
- SEE DOOR SCHEDULE & DETAILS
- SEE GRAPHICS SCHEDULE

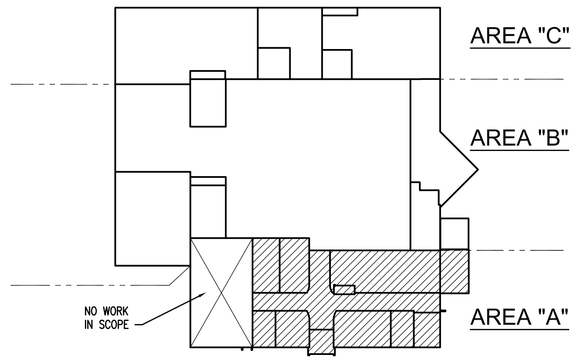

KEY PLAN
SCALE: N.T.S.

GENERAL NOTES:

A. THE CONTRACTOR SHALL PROVIDE AND INSTALL ALL MATERIALS AND EQUIPMENT REQUIRED FOR A COMPLETE INSTALLATION PER ALL APPLICABLE CODES AND THESE DRAWINGS, UNLESS OTHERWISE NOTED.

B. ALL EXISTING FLOORS, WALLS, CEILINGS, AND OTHER SURFACES TO RECEIVE A FINISH MATERIAL SHALL BE MADE SQUARE, LEVEL, AND PLUMB. CLEAN & PREP EXISTING FLOORS, WALLS, CEILINGS, AND OTHER SURFACES AS NEEDED FOR NEW FINISH INSTALLATION AS PER MANUFACTURER RECOMMENDATIONS.

C. CONTRACTOR SHALL FIELD VERIFY ALL DIMENSIONS & EXISTING CONDITIONS PRIOR TO COMMENCING WORK. IF ANY DISCREPANCIES EXIST, THE CONTRACTOR SHALL NOTIFY ARCHITECT IMMEDIATELY.

D. COORDINATE ALL WORK WITH MECHANICAL, PLUMBING, AND ELECTRICAL DRAWINGS. IF DISCREPANCY EXISTS, CONTACT THE ARCHITECT.

E. UNLESS NOTED OTHERWISE, ALL MATERIAL AND EQUIPMENT WILL BE FURNISHED AND INSTALLED BY THE GENERAL CONTRACTOR. THIS NOTE APPLIES TO ALL DRAWINGS.

F. INTERIOR STUD WALLS SHALL SHALL EXTEND FROM FLOOR TO STRUCTURE ABOVE. 4" (NOM.) STUD WALLS TO BE CONSTRUCTED OF 362S125-30 METAL STUDS AND 6" (NOM.) STUD WALLS TO BE CONSTRUCTED OF 550S125-30 METAL STUDS INCLUDING BOTTOM PLATES WITH HORIZONTAL BLOCKING BETWEEN STUDS AT MID-POINT BETWEEN FLOOR AND CEILING UNLESS OTHERWISE NOTED. ALL STUDS SHALL BE SPACED AT 16" O.C. WITH 5/8" GYPSUM BOARD, UNLESS NOTED OTHERWISE. SHEATHING SHALL EXTEND FROM 1/2" ABOVE FLOOR SLAB TO 6" (MIN.) ABOVE ADJACENT CEILING LINE. SEE INTERIOR WALL TYPES.

G. FIRE-TREATED WOOD BLOCKING OR FIRE-TREATED PLYWOOD SHALL BE INSTALLED BEHIND ALL WALL-MOUNTED EQUIPMENT, FIXTURES, AND SHELVING.

H. THE CABINET VENDOR SHALL FURNISH SHOP DRAWINGS TO THE ARCHITECT FOR REVIEW PRIOR TO FABRICATING.

I. ALL RESTROOM ACCESSORIES SHALL BE MOUNTED WITH VANDAL-RESISTANT METAL FASTENERS INTO WOOD BLOCKING.

J. ALL GYPSUM BOARD TO BE INSTALLED NEW ON RESTROOM CEILINGS SHALL BE 5/8" WATER RESISTANT GRADE.

K. ANY INSULATION CONCEALED IN WALLS SHALL HAVE A FLAME SPREAD OF 25 MAX.

L. REPAIR SLAB AS PER SPECIFICATION SECTION 033540 & SLAB REPAIR DETAIL "3/A1.2".

M. PROVIDE SOLID PLYWOOD BACKING BEHIND SIGNAGE AS NEEDED.

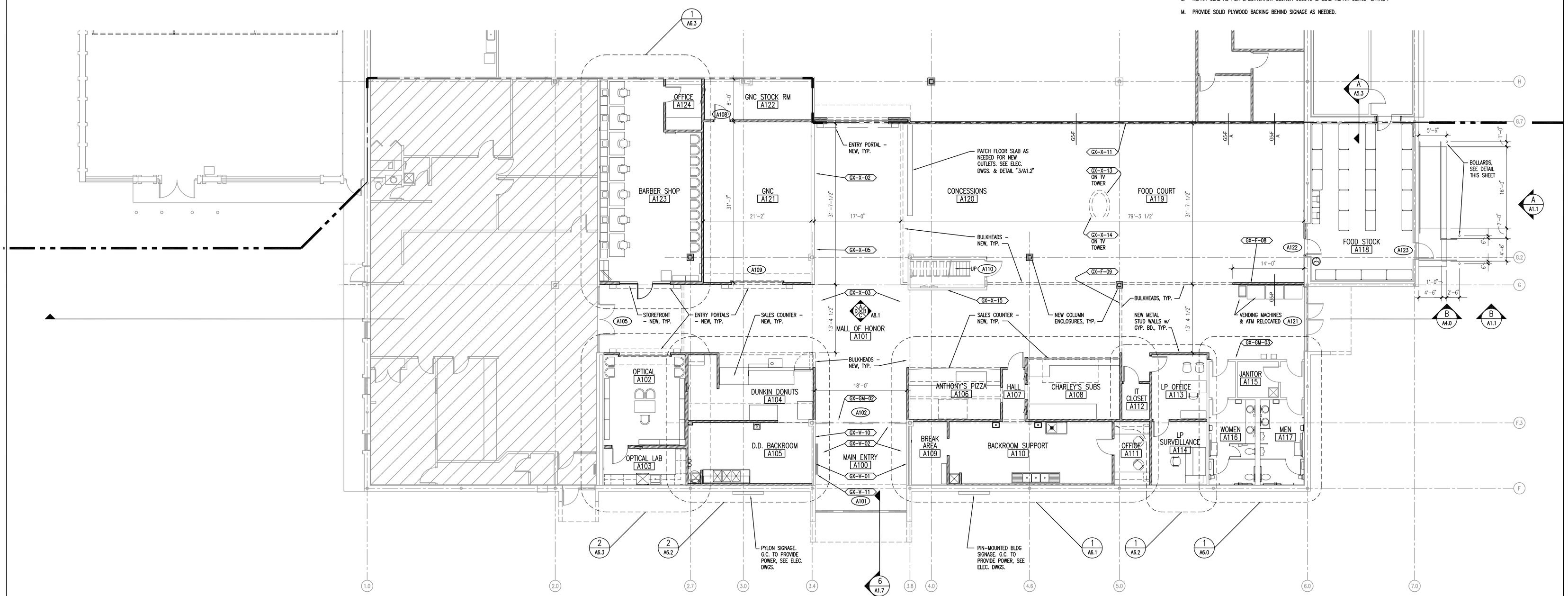

1 A1.1 ENLARGED MALL & FOOD COURT FLOOR PLAN
SCALE: 1/8" = 1'-0"

AREA "A"

DATES AND REVISIONS	
No.	Date/Description
	04.11.12 – BID

EXCHANGE™

RICHARD L. BOWEN + ASSOCIATES INC.
ARCHITECTS • ENGINEERS • CONSTRUCTION MANAGERS
13300 Shaker Boulevard | Cleveland, Ohio. 44120
Phone: (216) 491-9300 Fax: (216) 491-8053
www.rlba.com - email@rlba.com

FT. MYER EXCHANGE
JBMHH - MYER
ARLINGTON, VIRGINIA

AREA "A"
ENLARGED FLOOR PLAN

DRAWN BY: RTV
CHECKED BY: --
RLB NO.: 7800.02

DRAWING NO.
A1.1

P:\7800\7800.02 FT. MYER PX IMAGE UPGRADE CONST. CONTRACT DOCS\ARCH\780002_A01-01.DWG | PLOTTED 04.09.2012 09:20AM BY ANDREW HENLEY

GENERAL NOTES:

A. THE CONTRACTOR SHALL PROVIDE AND INSTALL ALL MATERIALS AND EQUIPMENT REQUIRED FOR A COMPLETE INSTALLATION PER ALL APPLICABLE CODES AND THESE DRAWINGS, UNLESS OTHERWISE NOTED.

B. ALL EXISTING FLOORS, WALLS, CEILINGS, AND OTHER SURFACES TO RECEIVE A FINISH MATERIAL SHALL BE MADE SQUARE, LEVEL, AND PLUMB. CLEAN & PREP EXISTING FLOORS, WALLS, CEILINGS, AND OTHER SURFACES AS NEEDED FOR NEW FINISH INSTALLATION AS PER MANUFACTURER RECOMMENDATIONS.

C. CONTRACTOR SHALL FIELD VERIFY ALL DIMENSIONS & EXISTING CONDITIONS PRIOR TO COMMENCING WORK. IF ANY DISCREPANCIES EXIST, THE CONTRACTOR SHALL NOTIFY ARCHITECT IMMEDIATELY.

D. COORDINATE ALL WORK WITH MECHANICAL, PLUMBING, AND ELECTRICAL DRAWINGS. IF DISCREPANCY EXISTS, CONTACT THE ARCHITECT.

E. UNLESS NOTED OTHERWISE, ALL MATERIAL AND EQUIPMENT WILL BE FURNISHED AND INSTALLED BY THE GENERAL CONTRACTOR. THIS NOTE APPLIES TO ALL DRAWINGS.

F. INTERIOR STUD WALLS SHALL EXTEND FROM FLOOR TO STRUCTURE ABOVE. 4" (NOM.) STUD WALLS TO BE CONSTRUCTED OF 362S125-30 METAL STUDS AND 6" (NOM.) STUD WALLS TO BE CONSTRUCTED OF 550S125-30 METAL STUDS INCLUDING BOTTOM PLATES WITH HORIZONTAL BLOCKING BETWEEN STUDS AT MID-POINT BETWEEN FLOOR AND CEILING UNLESS OTHERWISE NOTED. ALL STUDS SHALL BE SPACED AT 16" O.C. WITH ⅝" GYPSUM BOARD, UNLESS NOTED OTHERWISE. SHEATHING SHALL EXTEND FROM ½" ABOVE FLOOR SLAB TO 6" (MIN.) ABOVE ADJACENT CEILING LINE. SEE INTERIOR WALL TYPES.

G. FIRE-TREATED WOOD BLOCKING OR FIRE-TREATED PLYWOOD SHALL BE INSTALLED BEHIND ALL WALL-MOUNTED EQUIPMENT, FIXTURES, AND SHELVING.

H. THE CABINET VENDOR SHALL FURNISH SHOP DRAWINGS TO THE ARCHITECT FOR REVIEW PRIOR TO FABRICATING.

I. ALL RESTROOM ACCESSORIES SHALL BE MOUNTED WITH VANDAL-RESISTANT METAL FASTENERS INTO WOOD BLOCKING.

J. ALL GYPSUM BOARD TO BE INSTALLED NEW ON RESTROOM CEILINGS SHALL BE 5/8" WATER RESISTANT GRADE.

K. ANY INSULATION CONCEALED IN WALLS SHALL HAVE A FLAME SPREAD OF 25 MAX.

L. REPAIR SLAB AS PER SPECIFICATION SECTION 033540 & SLAB REPAIR DETAIL "3/A1.2".

M. PROVIDE SOLID WOOD PLYWOOD BACKING BEHIND SIGNAGE AS NEEDED.

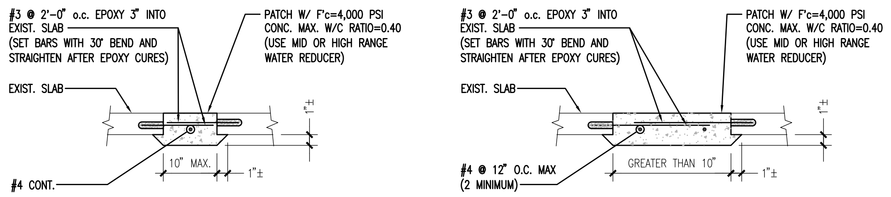

3 / A1.2 SLAB REPAIR DETAILS
SCALE: 3/4" = 1'-0"

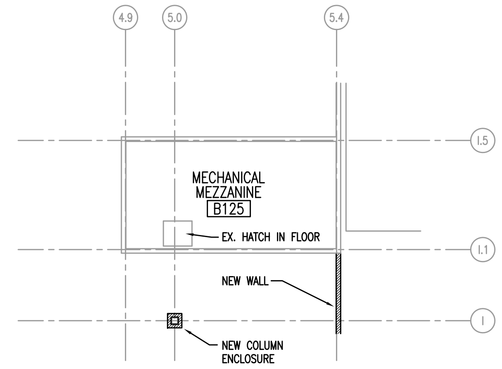

2 / A1.2 EX. MECHANICAL MEZZANINE
SCALE: 1/8" = 1'-0"

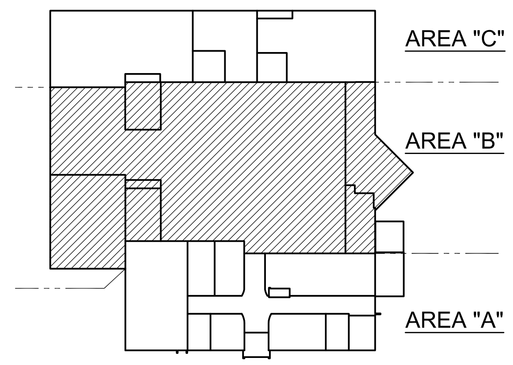

KEY PLAN
SCALE: N.T.S.

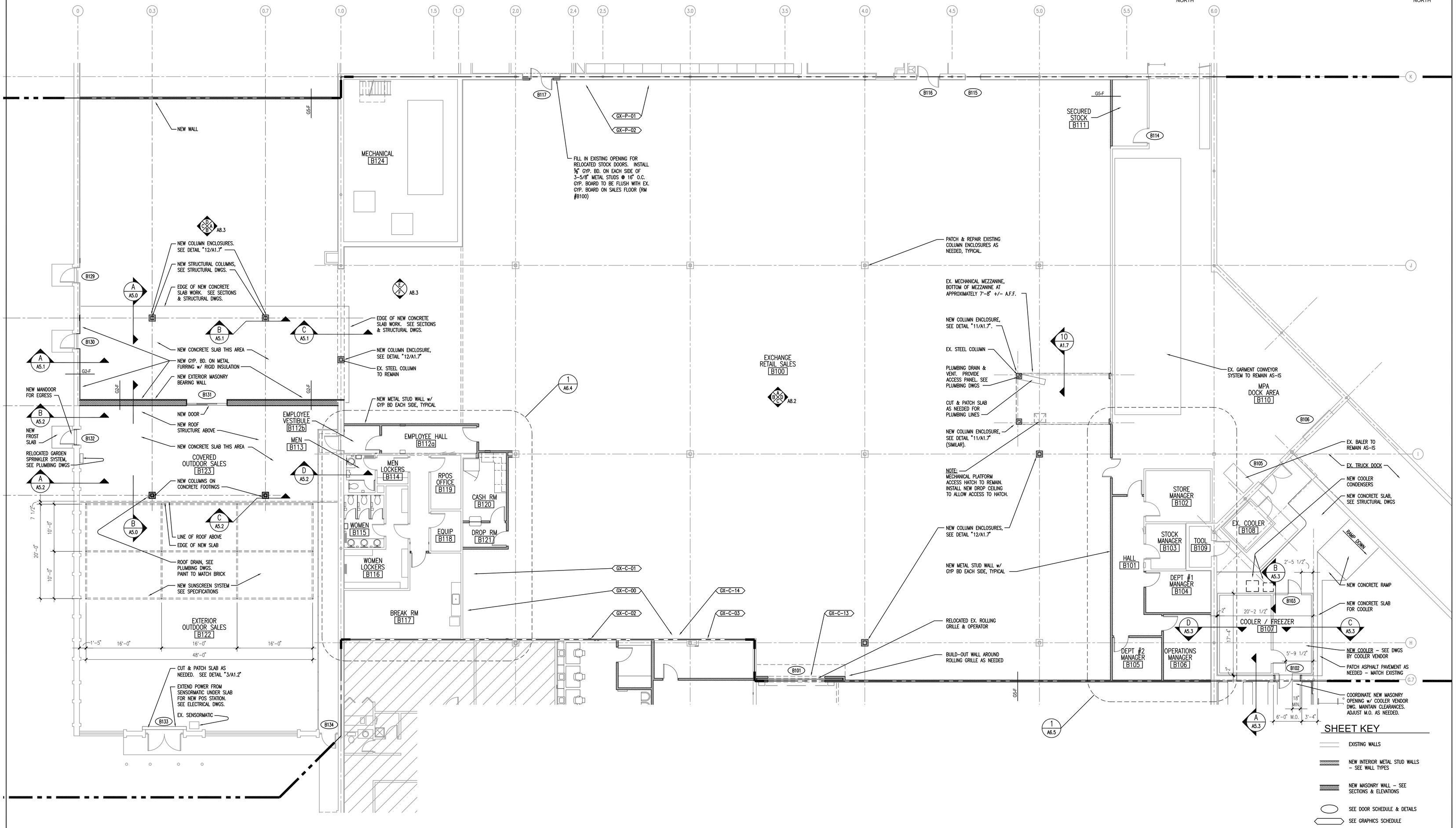

1 / A1.2 ENLARGED RETAIL SALES AREA FLOOR PLAN
SCALE: 1/8" = 1'-0"

AREA "B"

DATES AND REVISIONS	
No.	Date/Description
	04.11.12 – BID

EXCHANGE™

RICHARD L. BOWEN + ASSOCIATES INC.
13000 Shaker Boulevard / Cleveland, Ohio 44120
Phone: (216) 491-8300 Fax: (216) 491-8053
www.rlba.com - email@rlba.com

FT. MYER EXCHANGE
JBMHH - MYER
ARLINGTON, VIRGINIA
AREA "B"
ENLARGED FLOOR PLAN

DRAWN BY: RTV
CHECKED BY: --
RLB NO.: 7800.02

DRAWING NO.
A1.2

P:\7800\7800.02 FT. MYER PX IMAGE UPGRADE CONST. CONTRACT DOCS\ARCH\7800.02_A01-02.DWG | PLOTTED 04.26.2012 04:15PM BY RYAN VANJO

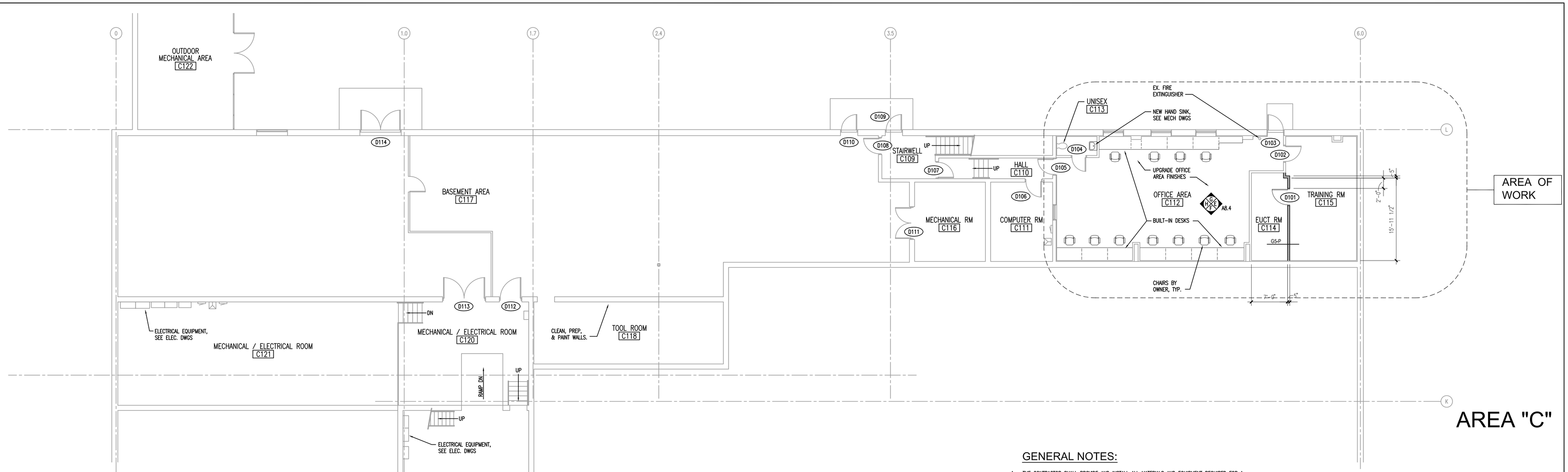

AREA "C"

2 A1.3 BASEMENT FLOOR PLAN
SCALE: 1/8" = 1'-0"

GENERAL NOTES:

A. THE CONTRACTOR SHALL PROVIDE AND INSTALL ALL MATERIALS AND EQUIPMENT REQUIRED FOR A COMPLETE INSTALLATION PER ALL APPLICABLE CODES AND THESE DRAWINGS, UNLESS OTHERWISE NOTED.

B. ALL EXISTING FLOORS, WALLS, CEILINGS, AND OTHER SURFACES TO RECEIVE A FINISH MATERIAL SHALL BE MADE SQUARE, LEVEL, AND PLUMB. CLEAN & PREP EXISTING FLOORS, WALLS, CEILINGS, AND OTHER SURFACES AS NEEDED FOR NEW FINISH INSTALLATION AS PER MANUFACTURER RECOMMENDATIONS.

C. CONTRACTOR SHALL FIELD VERIFY ALL DIMENSIONS & EXISTING CONDITIONS PRIOR TO COMMENCING WORK. IF ANY DISCREPANCIES EXIST, THE CONTRACTOR SHALL NOTIFY THE ARCHITECT IMMEDIATELY.

D. COORDINATE ALL WORK WITH MECHANICAL, PLUMBING, AND ELECTRICAL DRAWINGS. IF DISCREPANCY EXISTS, CONTACT THE ARCHITECT.

E. UNLESS NOTED OTHERWISE, ALL MATERIAL AND EQUIPMENT WILL BE FURNISHED AND INSTALLED BY THE GENERAL CONTRACTOR. THIS NOTE APPLIES TO ALL DRAWINGS.

F. INTERIOR STUD WALLS SHALL SHALL EXTEND FROM FLOOR TO STRUCTURE ABOVE. 4" (NOM.) STUD WALLS TO BE CONSTRUCTED OF 362S125-30 METAL STUDS AND 6" (NOM.) STUD WALLS TO BE CONSTRUCTED OF 550S125-30 METAL STUDS INCLUDING BOTTOM PLATES WITH HORIZONTAL BLOCKING BETWEEN STUDS AT MID-POINT BETWEEN FLOOR AND CEILING UNLESS OTHERWISE NOTED. ALL STUDS SHALL BE SPACED AT 16" O.C. WITH ⅝" GYPSUM BOARD, UNLESS NOTED OTHERWISE. SHEATHING SHALL EXTEND FROM ⅝" ABOVE FLOOR SLAB TO 6" (MIN.) ABOVE ADJACENT CEILING LINE. SEE INTERIOR WALL TYPES.

G. FIRE-TREATED WOOD BLOCKING OR FIRE-TREATED PLYWOOD SHALL BE INSTALLED BEHIND ALL WALL-MOUNTED EQUIPMENT, FIXTURES, AND SHELVING.

H. THE CABINET VENDOR SHALL FURNISH SHOP DRAWINGS TO THE ARCHITECT FOR REVIEW PRIOR TO FABRICATING.

I. ALL RESTROOM ACCESSORIES SHALL BE MOUNTED WITH VANDAL-RESISTANT METAL FASTENERS INTO WOOD BLOCKING.

J. ALL GYPSUM BOARD TO BE INSTALLED NEW ON RESTROOM CEILINGS SHALL BE 5/8" WATER RESISTANT GRADE.

K. ANY INSULATION CONCEALED IN WALLS SHALL HAVE A FLAME SPREAD OF 25 MAX.

L. REPAIR SLAB AS PER SPECIFICATION & SLAB REPAIR DETAIL "3/A1.2".

SHEET KEY

EXISTING WALLS

NEW INTERIOR METAL STUD WALLS - SEE WALL TYPES

SEE DOOR SCHEDULE & DETAILS

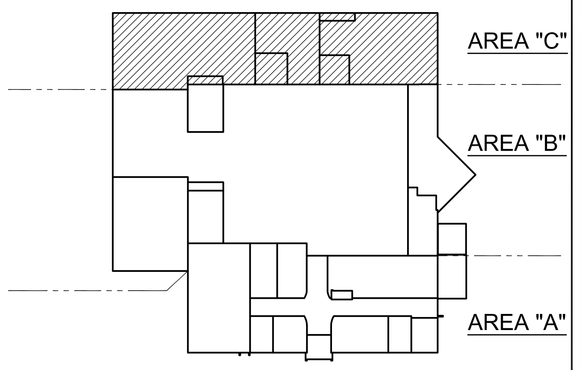

KEY PLAN
SCALE: N.T.S.

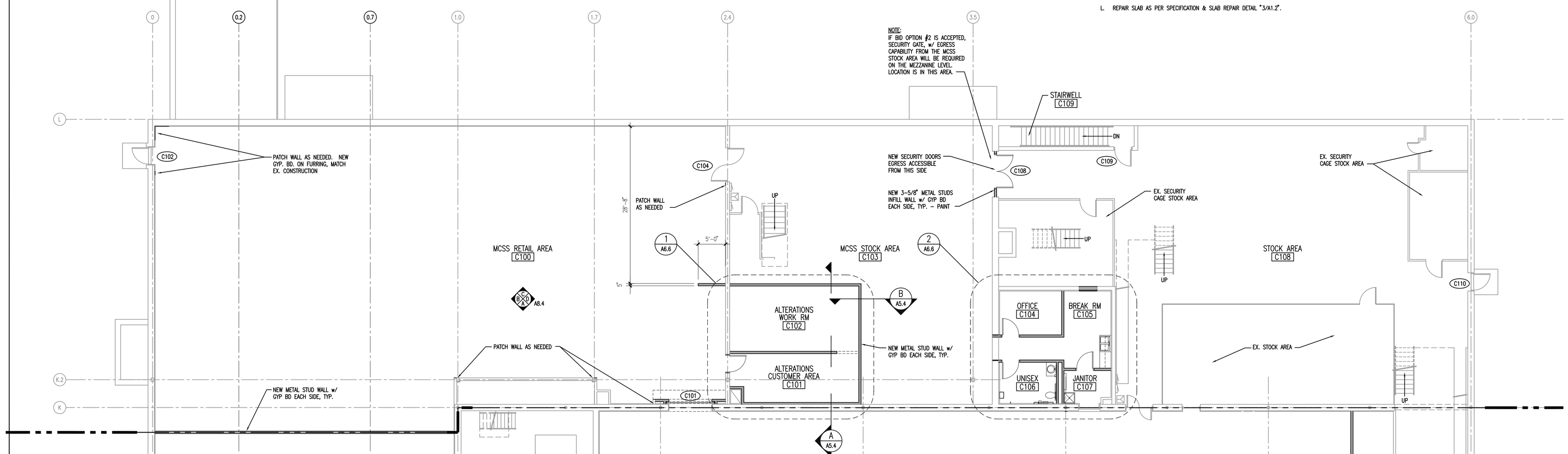

1 A1.3 BID OPTION #2
ENLARGED MCSS & MPA FLOOR PLAN
SCALE: 1/8" = 1'-0"

AREA "C"

DATES AND REVISIONS	
No.	Date/Description
	04.11.12 - BID

EXCHANGE™

RICHARD L. BOWEN + ASSOCIATES INC.
13000 Shaker Boulevard / Cleveland, Ohio 44120
Phone: (216) 491-5930 Fax: (216) 491-8053
www.rlba.com - email@rlba.com

FT. MYER EXCHANGE
JBMHH - MYER
ARLINGTON, VIRGINIA

AREA "C"
ENLARGED FLOOR PLAN

DRAWN BY: RTV
CHECKED BY: --
RLB NO.: 7800.02

DRAWING NO.
A1.3

P:\7800\7800.02 FT. MYER PX IMAGE UPGRADE CONST. CONTRACT DOCS\ARCH\780002_A01-03.DWG | PLOTTED 04.26.2012 04:16PM BY RYAN VANJO

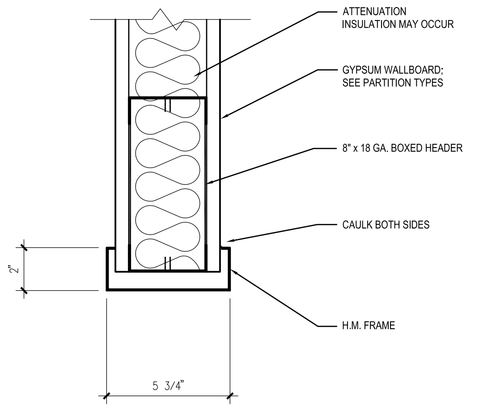

1 A1.4 H.M. GYP. BD. HEAD DETAIL
SCALE: 3" = 1'-0"

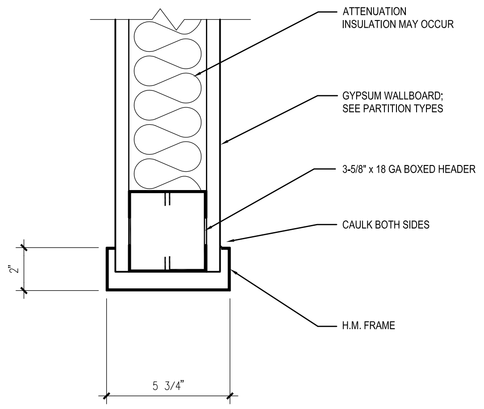

2 A1.4 H.M. GYP. BD. HEAD DETAIL
SCALE: 3" = 1'-0"

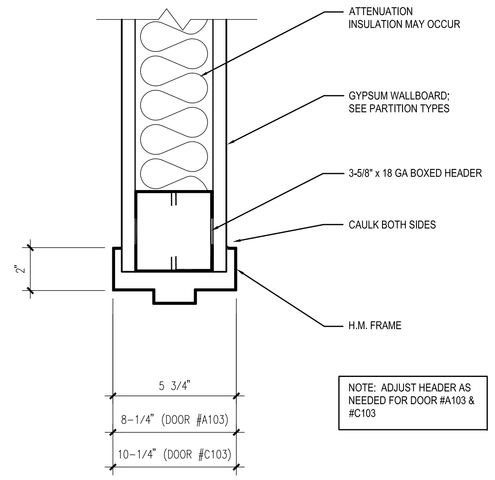

NOTE: ADJUST HEADER AS NEEDED FOR DOOR #A103 & #C103

3 A1.4 H.M. GYP. BD. HEAD DETAIL
SCALE: 3" = 1'-0"

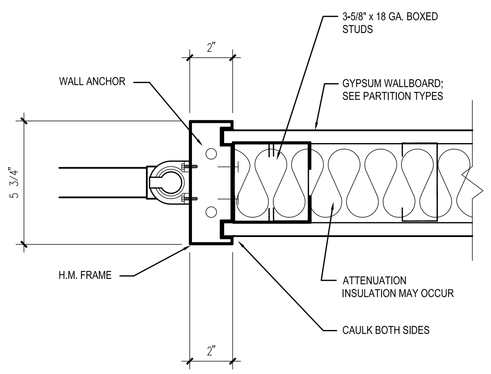

4 A1.4 H.M. GYP. BD. JAMB DETAIL
SCALE: 3" = 1'-0"

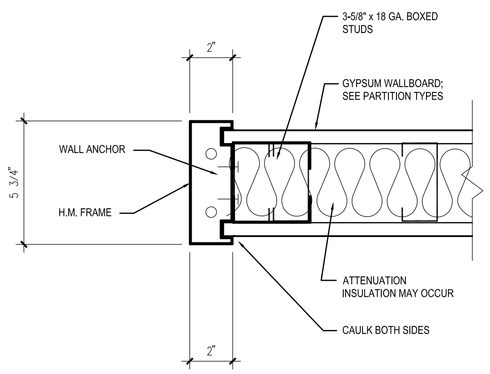

5 A1.4 H.M. GYP. BD. JAMB DETAIL
SCALE: 3" = 1'-0"

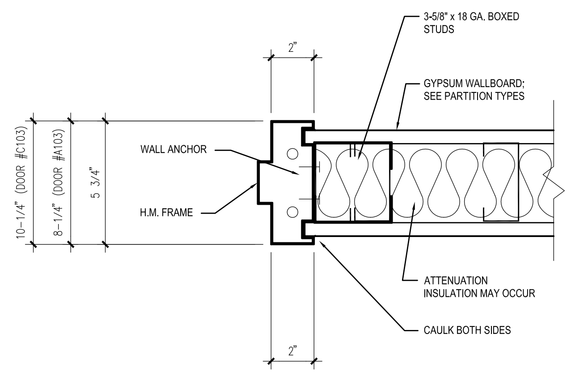

6 A1.4 H.M. GYP. BD. JAMB DETAIL
SCALE: 3" = 1'-0"

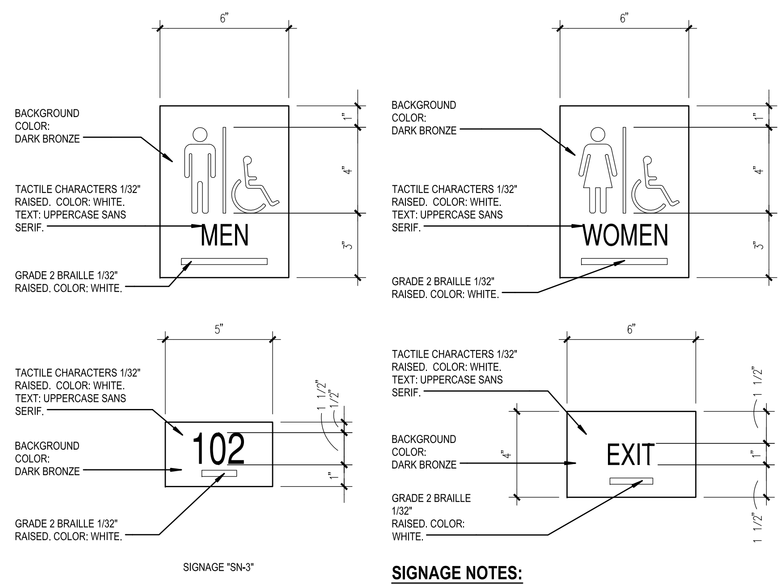

SIGNAGE "SN-3"

SIGNAGE NOTES:

1. PROVIDE SIGNAGE AT ALL ROOM DOORS INCLUDING BUT NOT LIMITED TO: OFFICES, BREAKROOM, RESTROOMS, JANITOR, MECHANICAL, SERVICE, AND ELECTRICAL.

7 A1.4 SIGNAGE DETAILS
SCALE: 3" = 1'-0"

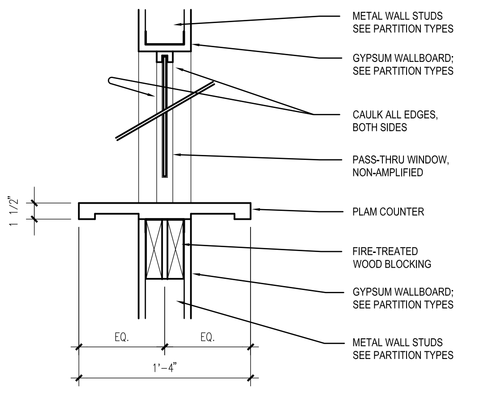

8 A1.4 H.M. GYP. BD. JAMB DETAIL
SCALE: 3" = 1'-0"

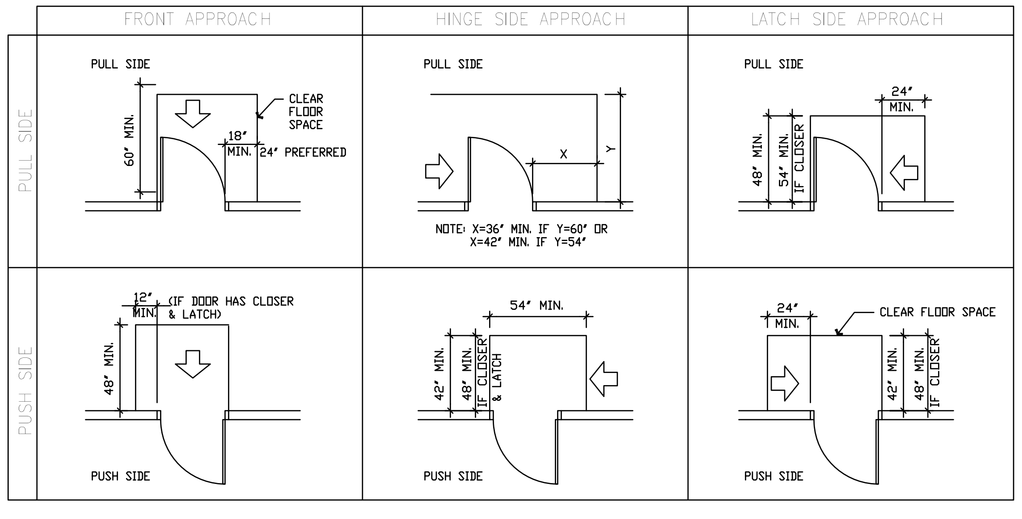

11 A1.4 DOOR CLEARANCE REQUIREMENTS
SCALE: 1/4" = 1'-0"

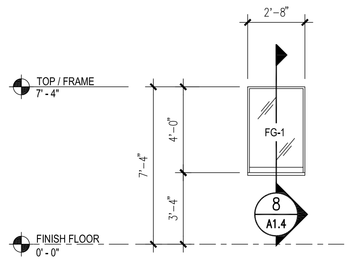

A

GLASS TYPES

IG-1: INSULATED GLASS TEMPERED
IG-2: INSULATED GLASS FLOAT
FG-1: FLOAT GLASS
TG-1: TEMPERED GLASS

REFER TO SPECIFICATIONS

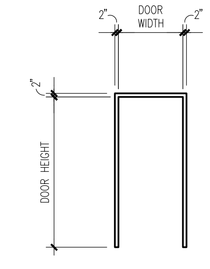

1

9 A1.4 WINDOW TYPES
SCALE: 1/4" = 1'-0"

10 A1.4 FRAME TYPES
SCALE: 1/4" = 1'-0"

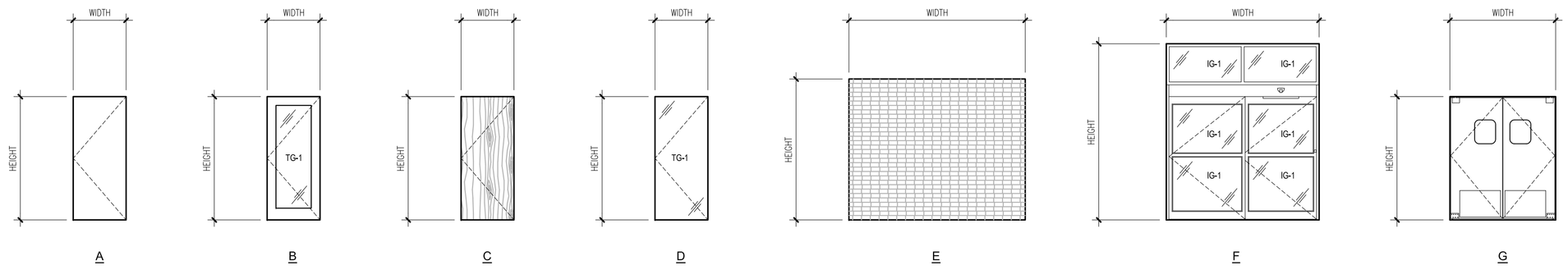

12 A1.4 DOOR TYPES
SCALE: 1/4" = 1'-0"

DOOR SCHEDULE

	DOOR NO.	DOOR LOCATION EXTERIOR / INTERIOR	DOOR HEIGHT	DOOR WIDTH	DOOR THICKNESS	DOOR MATERIAL	DOOR TYPE	DOOR FINISH EXT.	DOOR FINISH INT.	FRAME MATERIAL	FRAME TYPE	FRAME FINISH EXT.	FRAME FINISH INT.	HEAD DETAIL	JAMB DETAIL	SILL DETAIL	HARDWARE DESIGNATION	COMMENTS
AREA "A" DOORS	A101	EXTERIOR / MAIN ENTRY	---	---	---	ALUM.	---	---	---	ALUM.	---	---	---	---	---	---	---	EXISTING DOOR & FRAME
	A102	MAIN ENTRY / MALL OF HONOR	---	---	---	ALUM.	---	---	---	ALUM.	---	---	---	---	---	---	---	EXISTING DOOR & FRAME
	A103	OPTICAL / OPTICAL LAB	3'-0"	7'-0"	1-3/4"	WOOD	C	PRE	PRE	HM	1	PT-1S	PT-1S	3/A1.04	6/A1.04	---		
	A104	MALL OF HONOR / OPTICAL	8'-0"	10'-0"	---	ALUM.	E	BRONZE	BRONZE	ALUM.	---	BRONZE	BRONZE	7/A1.05	4/A1.05	1/A1.05	5	
	A105	MALL OF HONOR / CREDIT UNION	---	---	---	ALUM.	---	---	---	ALUM.	---	---	---	---	---	---	---	EXISTING DOOR & FRAME
	A106	MALL OF HONOR / BARBER SHOP	3'-0"	7'-0"	1/2"	GLASS	D	---	---	---	---	---	---	---	---	---		
	A107	BARBER SHOP / OFFICE	3'-0"	7'-0"	1-3/4"	HM	C	PT-14S	PT-14S	HM	1	PT-14S	PT-14S	3/A1.04	6/A1.04	---	10	
	A108	GNC / STOCK RM	3'-0"	7'-0"	1-3/4"	WOOD	C	PRE	PRE	HM	1	PT-1S	PT-1S	3/A1.04	6/A1.04	---	5	
	A109	MALL OF HONOR / GNC	8'-0"	10'-0"	---	ALUM.	E	BRONZE	BRONZE	ALUM.	---	BRONZE	BRONZE	7/A1.05	4/A1.05	1/A1.05		
	A110	CONCESSIONS / STAIRWELL	---	---	---	HM	A	PT-7S	---	HM	1	PT-7S	---	---	---	---	---	EXISTING DOOR & FRAME
	A111	MALL OF HONOR / HALL	3'-0"	7'-0"	1-3/4"	HM	A	PT-7S	PT-7S	HM	1	PT-7S	PT-7S	3/A1.04	6/A1.04	---	5	
	A112	BACKROOM SUPPORT / OFFICE	3'-0"	7'-0"	1-3/4"	HM	A	PT-7S	PT-7S	HM	1	PT-7S	PT-7S	3/A1.04	6/A1.04	---	10	
	A113	MALL OF HONOR / IT CLOSET	3'-0"	7'-0"	1-3/4"	WOOD	C	PRE	PRE	HM	1	PT-7S	PT-7S	3/A1.04	6/A1.04	---	5	
	A114	MALL OF HONOR / LP OFFICE	3'-0"	7'-0"	1-3/4"	WOOD	C	PRE	PRE	HM	1	PT-7S	PT-7S	3/A1.04	6/A1.04	---	5	
	A115	LP OFFICE / LP SURVEILLANCE	3'-0"	7'-0"	1-3/4"	WOOD	C	PRE	PRE	HM	1	PT-7S	PT-7S	3/A1.04	6/A1.04	---	10	
	A116	WOMEN'S HALL / WOMEN	---	---	---	WOOD	---	---	---	HM	---	PT-7S	PT-7S	---	---	---	---	EXISTING DOOR & FRAME
	A117	MALL OF HONOR / WOMEN HALL	---	---	---	WOOD	---	---	---	HM	---	PT-8S	PT-7S	---	---	---	---	EXISTING DOOR & FRAME
	A118	MALL OF HONOR / MEN HALL	---	---	---	WOOD	---	---	---	HM	---	PT-8S	PT-7S	---	---	---	---	EXISTING DOOR & FRAME
	A119	MEN HALL / MEN	---	---	---	WOOD	---	---	---	HM	---	PT-7S	PT-7S	---	---	---	---	EXISTING DOOR & FRAME
	A120	MEN HALL / JANITOR	---	---	---	WOOD	---	---	---	HM	---	PT-7S	PT-7S	---	---	---	---	EXISTING DOOR & FRAME
	A121	EXTERIOR / MALL OF HONOR	---	---	---	ALUM.	---	---	---	ALUM.	---	---	---	---	---	---	---	EXISTING DOOR & FRAME
	A122	FOOD COURT / FOOD STOCK	3'-0"	7'-0"	1-3/4"	HM	A	PT-7S	PT-7S	HM	1	PT-7S	PT-7S	---	---	---	5	
	A123	EXTERIOR / FOOD STOCK	---	---	---	HM	A	---	PT-7S	HM	---	---	PT-7S	---	---	---	---	EXISTING DOOR & FRAME
AREA "B" DOORS																		RE-USE COILING DOOR & OPERATOR
	B101	MALL OF HONOR / RETAIL SALES	8'-0"	12'-0"	---	ALUM.	E	BRONZE	BRONZE	ALUM.	---	BRONZE	BRONZE	7/A1.05	4/A1.05	1/A1.05		
	B102	FOOD STOCK / COOLER-FREEZER	3'-0"	7'-0"	---	---	---	PRE	PRE	---	---	---	---	8/A1.05	5/A1.05	2/A1.05	---	COOLER DOOR BY VENDOR
	B103	EXTERIOR / COOLER-FREEZER	(2) 3'-0"	7'-0"	---	---	---	PRE	PRE	---	---	---	---	---	---	---	---	COOLER DOOR BY VENDOR
	B104	EXTERIOR / MPA DOCK AREA	---	---	---	---	---	---	---	---	---	---	---	---	---	---	---	EXISTING DOOR & FRAME
	B105	EXTERIOR / MPA DOCK AREA	---	---	---	---	---	---	---	---	---	---	---	---	---	---	---	EXISTING DOOR & FRAME
	B106	EXTERIOR / TOOL RM	---	---	---	---	---	---	---	---	---	---	---	---	---	---	---	EXISTING DOOR & FRAME
	B107	HALL / DEPT #2 MANAGER	3'-0"	7'-0"	1-3/4"	WOOD	C	PRE	PRE	HM	1	PT-7S	PT-7S	3/A1.04	6/A1.04	---	10	
	B108	HALL / OPERATIONS MANAGER	3'-0"	7'-0"	1-3/4"	WOOD	C	PRE	PRE	HM	1	PT-7S	PT-7S	3/A1.04	6/A1.04	---	10	
	B109	HALL / DEPT #1 MANAGER	3'-0"	7'-0"	1-3/4"	WOOD	C	PRE	PRE	HM	1	PT-7S	PT-7S	3/A1.04	6/A1.04	---	10	
	B110	HALL / STOCK MANAGER	3'-0"	7'-0"	1-3/4"	WOOD	C	PRE	PRE	HM	1	PT-7S	PT-7S	3/A1.04	6/A1.04	---	10	
	B111	HALL / STORE MANAGER	3'-0"	7'-0"	1-3/4"	WOOD	C	PRE	PRE	HM	1	PT-7S	PT-7S	3/A1.04	6/A1.04	---	10	
	B112	MPA DOCK AREA / HALL	3'-0"	7'-0"	1-3/4"	WOOD	C	PRE	PRE	HM	1	PT-7S	PT-7S	3/A1.04	6/A1.04	---	18	
	B113	MPA DOCK AREA / RETAIL SALES	(2) 2'-0"	7'-0"	1-1/2"	H.I.T.	G	PRE	PRE	HM	1	PT-7S	PT-7S	3/A1.04	6/A1.04	---	---	
	B114	MPA DOCK / SECURED STORAGE	---	---	---	---	---	---	---	---	---	---	---	---	---	---	---	EXISTING DOOR & FRAME
	B115	RETAIL SALES / STOCK AREA	---	---	---	---	---	---	---	---	---	---	---	---	---	---	---	EXISTING OPENING
	B116	RETAIL SALES / STOCK AREA	---	---	---	---	---	---	---	---	---	---	---	---	---	---	---	EXISTING DOOR
	B117	RETAIL SALES / STOCK AREA	(2) 2'-3"	7'-0"	1-1/2"	H.I.T.	G	PRE	PRE	---	1	---	---	1/A1.04	4/A1.04	---	---	BASE BID, RELOCATED DOOR, VERIFY SIZE
	B118	RETAIL SALES / DROP RM	3'-0"	7'-0"	1-3/4"	WOOD	C	PRE	PRE	HM	1	PT-16S	PT-7S	3/A1.04	6/A1.04	---	18	
	B119	DROP RM / CASH ROOM	3'-0"	7'-0"	1-3/4"	WOOD	C	PRE	PRE	HM	1	PT-16S	PT-7S	3/A1.04	6/A1.04	---	24	
	B120	RETAIL SALES / EMPLOYEE HALL	3'-0"	7'-0"	1-3/4"	WOOD	C	PRE	PRE	HM	1	PT-16S	PT-7S	3/A1.04	6/A1.04	---	18	
	B121	EMPLOYEE HALL / ICA OFFICE	---	---	---	WOOD	---	---	---	HM	---	PT-7S	PT-7S	---	---	---	---	EXISTING DOOR & FRAME
	B122	EMPLOYEE HALL / EQUIPMENT	---	---	---	WOOD	---	---	---	HM	---	PT-7S	PT-7S	---	---	---	---	EXISTING DOOR & FRAME
	B123	EMPLOYEE HALL / BREAK RM	---	---	---	WOOD	---	---	---	HM	---	PT-7S	PT-8S	---	---	---	---	RELOCATED EXISTING DOOR & FRAME
	B124	EMPLOYEE HALL / WOMEN LOCK.	---	---	---	WOOD	---	---	---	HM	---	PT-7S	PT-8S	---	---	---	---	EXISTING DOOR & FRAME
	B125	WOMEN LOCKER / WOMEN	---	---	---	WOOD	---	---	---	HM	---	PT-8S	PT-8S	---	---	---	---	EXISTING DOOR & FRAME
	B126	EMPLOYEE HALL / MEN LOCKER	---	---	---	WOOD	---	---	---	HM	---	PT-8S	PT-8S	---	---	---	---	EXISTING DOOR & FRAME
	B127	MEN LOCKER / MEN	---	---	---	WOOD	---	---	---	HM	---	PT-8S	PT-8S	---	---	---	---	EXISTING DOOR & FRAME
	B128	VESTIBULE / EMPLOYEE HALL	---	---	---	WOOD	---	PRE	PRE	HM	---	PT-7S	PT-7S	3/A1.04	6/A1.04	---	---	
	B129	EXTERIOR / RETAIL SALES	---	---	---	HM	---	---	PT-16S	HM	---	---	PT-16S	---	---	---	---	EXISTING DOOR & FRAME
	B130	EXTERIOR / RETAIL SALES	---	---	---	HM	---	---	PT-16S	HM	---	---	PT-16S	---	---	---	---	EXISTING DOOR & FRAME
	B131	COVERED OUTDOOR / RETAIL	8'-8"	10'-0"	---	ALUM	F	BRONZE	BRONZE	ALUM	---	BRONZE	BRONZE	8/A1.05	5/A1.05	2/A1.05	1	AUTOMATIC SLIDER UNIT
	B132	EXTERIOR / OUTDOOR SALES	3'-0"	7'-0"	1-3/4"	HM	A	PT-	PT-	HM	---	PT-	PT-				22	
	B133	EXTERIOR / OUTDOOR SALES	---	---	---	---	---	---	---	---	---	---	---	---	---	---	---	EXISTING DOOR & FRAME
	B134	EXTERIOR / OUTDOOR SALES	---	---	---	---	---	---	---	---	---	---	---	---	---	---	---	EXISTING DOOR & FRAME
	B134	EXTERIOR / OUTDOOR SALES	---	---	---	---	---	---	PT-7S	---	---	---	PT-7S	---	---	---	---	EXISTING DOOR & FRAME
AREA "C" DOORS	C101	RETAIL SALES / MCSS RETAIL	7'-0"	8'-0"	---	ALUM.	E	BRONZE	BRONZE	ALUM.	---	BRONZE	BRONZE	7/A1.05	4/A1.05	1/A1.05		RE-USE EXISTING ROLLING COIL DOOR
	C102	EXTERIOR / MCSS RETAIL	---	---	---	HM	---	---	PT-2S	HM	---	---	PT-2S	---	---	---	---	EXISTING DOOR & FRAME
	C103	MCSS RETAIL / ALTERATIONS	3'-0"	7'-0"	1-3/4"	WOOD	B	PRE	PRE	HM	1	PT-12S	PT-2S	3/A1.04	6/A1.04	---	4	
	C104	MCSS RETAIL / MCSS STOCK	---	---	---	---	---	---	---	---	---	---	---	---	---	---	---	EXISTING DOOR & FRAME
	C105	BREAK RM / UNISEX	3'-0"	7'-0"	1-3/4"	HM	A	PT-7S	PT-8S	HM	1	PT-7S	PT-8S	3/A1.04	6/A1.04	---	12	
	C106	BREAK RM / JANITOR	3'-0"	7'-0"	1-3/4"	HM	A	PT-7S	PT-7S	HM	1	PT-7S	PT-7S	3/A1.04	6/A1.04	---	5	
	C107	BREAK RM / OFFICE	3'-0"	7'-0"	1-3/4"	HM	A	PT-7S	PT-7S	HM	1	PT-7S	PT-7S	3/A1.04	6/A1.04	---	10	
	C108	MCSS STOCK / STOCK AREA	3'-0"	7'-0"	1-3/4"	HM	A	PT-7S	PT-7S	HM	1	PT-7S	PT-7S	3/A1.04	6/A1.04	---	13	
	C109	STOCK AREA / STAIRWELL	---	---	---	HM	---	---	---	HM	---	---	---	---	---	---	---	EXISTING DOOR & FRAME
	C110	EXTERIOR / STOCK AREA	---	---	---	HM	---	---	---	HM	---	---	---	---	---	---	---	EXISTING DOOR & FRAME
AREA "D" DOORS (BASEMENT)																		
	D101	TRAINING RM./ EUTC RM	3'-0"	7'-0"	1-3/4"	HM	A	PT-7S	PT-7S	HM	1	PT-7S	PT-7S	3/A1.04	6/A1.04	---	10	
	D102	OFFICE AREA / TRAINING RM	---	---	---	HM	---	PT-7S	PT-7S	HM	---	PT-7S	PT-7S	---	---	---	---	EXISTING DOOR & FRAME
	D103	EXTERIOR / OFFICE AREA	---	---	---	HM	---	---	PT-7S	HM	---	---	PT-7S	---	---	---	---	EXISTING DOOR & FRAME
	D104	OFFICE AREA / UNISEX	---	---	---	HM	---	PT-7S	PT-8S	HM	---	PT-7S	PT-8S	---	---	---	---	EXISTING DOOR & FRAME
	D105	HALL / OFFICE AREA	---	---	---	HM	---	PT-7S	PT-7S	HM	---	PT-7S	PT-7S	---	---	---	---	EXISTING DOOR & FRAME
	D106	HALL / COMPUTER RM	---	---	---	HM	---	PT-7S	---	HM	---	PT-7S	---	---	---	---	---	EXISTING DOOR & FRAME
	D107	STAIRWELL / HALL	---	---	---	HM	---	---	PT-7S	HM	---	---	PT-7S	---	---	---	---	EXISTING DOOR & FRAME
	D108	BASEMENT AREA / STAIRWELL	---	---	---	HM	---	---	---	HM	---	---	---	---	---	---	---	EXISTING DOOR & FRAME
	D109	EXTERIOR / STAIRWELL	---	---	---	HM	---	---	---	HM	---	---	---	---	---	---	---	EXISTING DOOR & FRAME
	D110	EXTERIOR / BASEMENT AREA	---	---	---	HM	---	---	---	HM	---	---	---	---	---	---	---	EXISTING DOOR & FRAME
	D111	BASEMENT AREA / MECH. RM.	---	---	---	HM	---	---	---	HM	---	---	---	---	---	---	---	EXISTING DOOR & FRAME
	D112	BASEMENT AREA / MECH - ELEC	---	---	---	HM	---	---	---	HM	---	---	---	---	---	---	---	EXISTING DOOR & FRAME
	D113	BASEMENT / MECH - ELEC	---	---	---	HM	---	---	---	HM	---	---	---	---	---	---	---	EXISTING DOOR & FRAME
	D114	EXTERIOR / BASEMENT AREA	---	---	---	HM	---	---	---	HM	---	---	---	---	---	---	---	EXISTING DOOR & FRAME

DOOR SCHEDULE NOTES

1. DOOR HARDWARE SHALL BE CAPABLE OF OPERATION WITH THE USE OF ONE (1) HAND AND SHALL NOT REQUIRE TIGHT PINCHING, TIGHT GRASPING, OR TWISTING OF THE WRIST TO OPERATE. THUMB-TURN DEADBOLTS ARE PROHIBITED, LEVER OR PADDLE DEADBOLT RELEASES ARE ACCEPTABLE.
2. DOOR THRESHOLDS SHALL NOT EXCEED ONE-HALF INCH (½") IN HEIGHT. THRESHOLDS EXCEEDING QUARTER INCH (¼") IN HEIGHT SHALL HAVE A 1:2 BEVEL.
3. DOOR CLOSERS SHALL MEET OPENING FORCE AND SWEEP PERIOD REQUIREMENTS.
4. REFER TO SPECIFICATIONS FOR HARDWARE SCHEDULE.
5. ALL HM DOORS & FRAMES TO BE PAINTED SEMI-GLOSS IF INDICATED.

DOORMATERIAL KEY

ALUM	ALUMINUM
H.I.T.	HIGH IMPACT THERMOPLASTIC
HM	HOLLOW METAL
WOOD	PRE-FINISHED

DATES AND REVISIONS

No.	Date/Description
	04.11.12 – BID

EXCHANGE™

RICHARD L. BOWEN + ASSOCIATES INC.
ARCHITECTS • ENGINEERS • CONSTRUCTION MANAGERS
13000 Shaker Boulevard / Cleveland, Ohio 44120
Phone: (216) 491-9300 Fax: (216) 491-9053
www.rlba.com - email@rlba.com

FT. MYER EXCHANGE
JBMHH - MYER
ARLINGTON, VIRGINIA

DOOR SCHEDULE & DETAILS

DRAWN BY: RTV
CHECKED BY: ---
RLB NO.: 7800.02

DRAWING NO. A1.4

P:\7800\7800.02 FT. MYER PX IMAGE UPGRADE CONST. CONTRACT DOCS\ARCH\780002_A01-04.DWG | PLOTTED 04-26-2012 04:17PM BY: RYAN VANJO

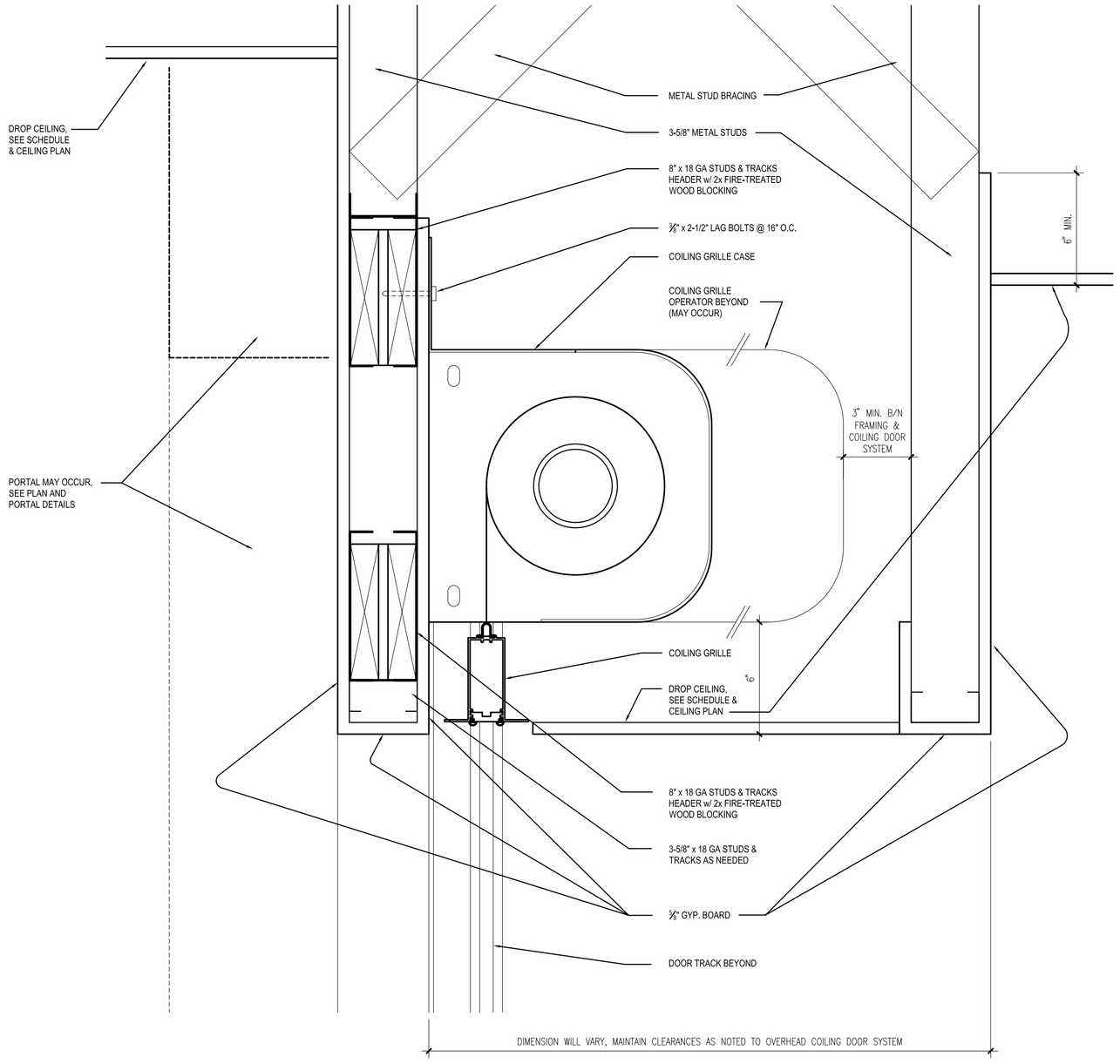

7 A1.5 COILING GRILLE HEAD DETAIL
SCALE: 3" = 1'-0"

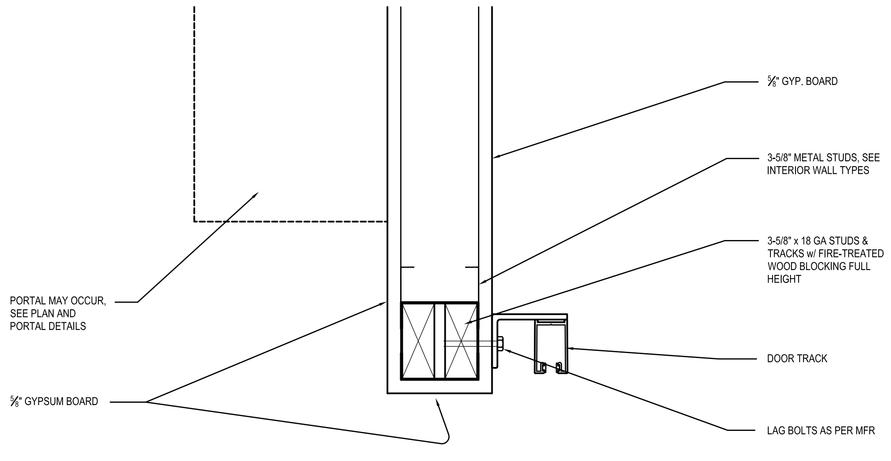

4 A1.5 COILING GRILLE JAMB DETAIL
SCALE: 3" = 1'-0"

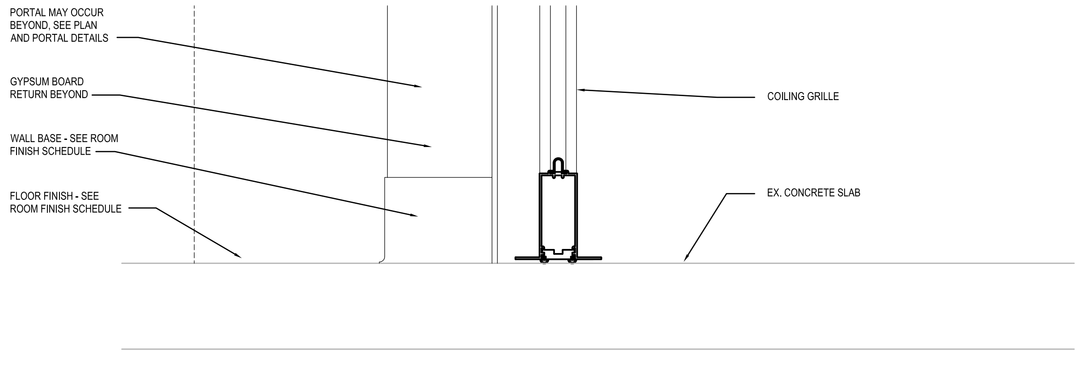

1 A1.5 COILING GRILLE SILL DETAIL
SCALE: 3" = 1'-0"

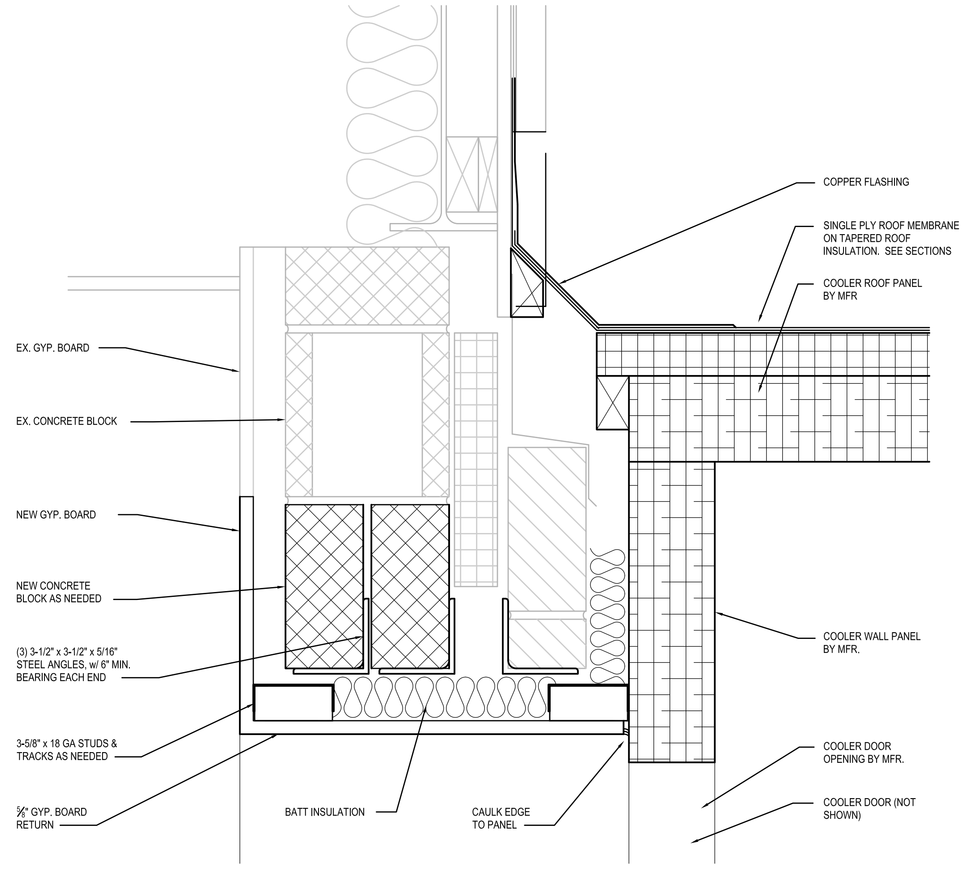

8 A1.5 COOLER HEAD DETAIL
SCALE: 3" = 1'-0"

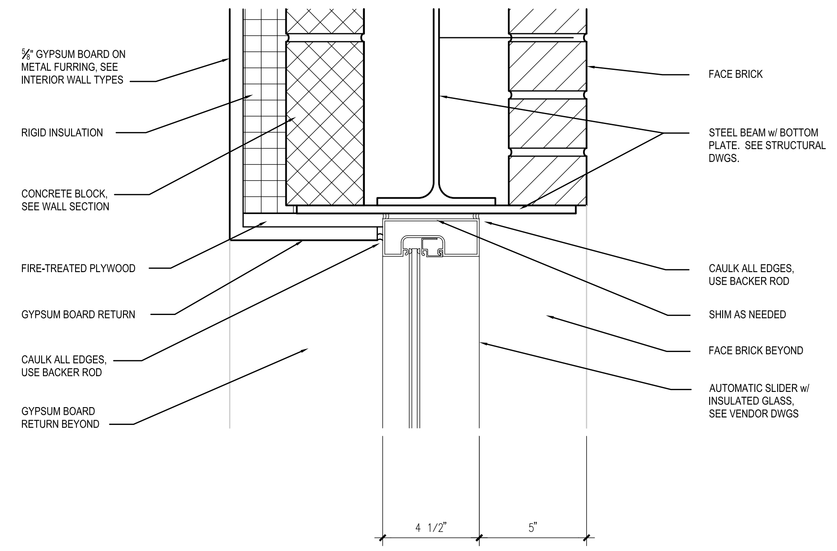

9 A1.5 SLIDER HEAD DETAIL
SCALE: 3" = 1'-0"

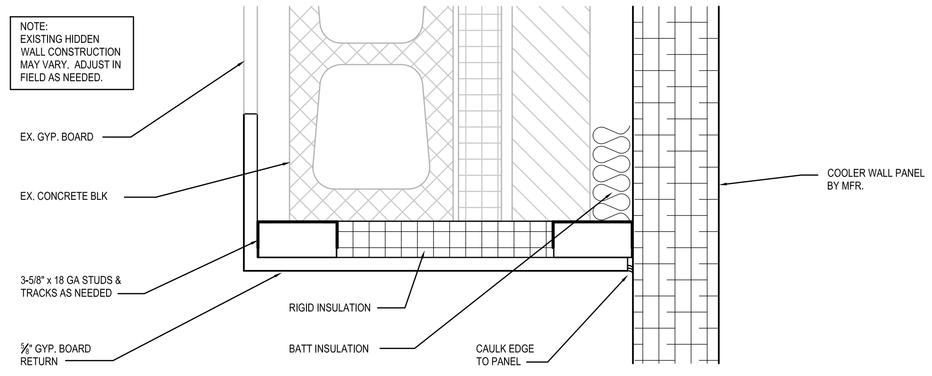

5 A1.5 COOLER JAMB DETAIL
SCALE: 3" = 1'-0"

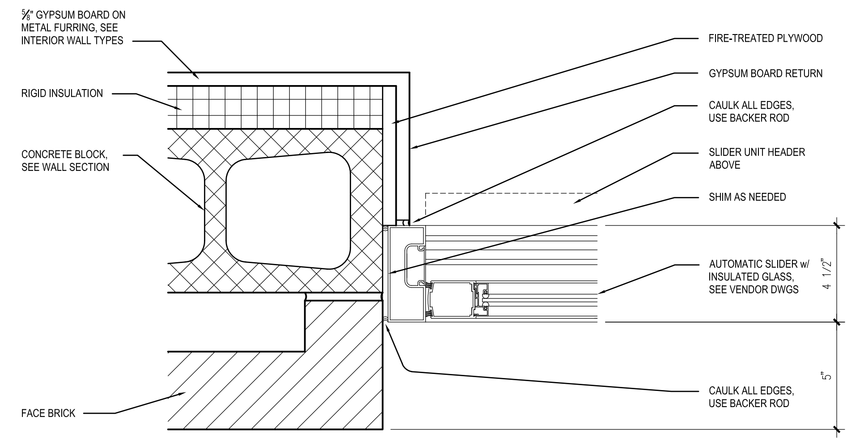

6 A1.5 SLIDER JAMB DETAIL
SCALE: 3" = 1'-0"

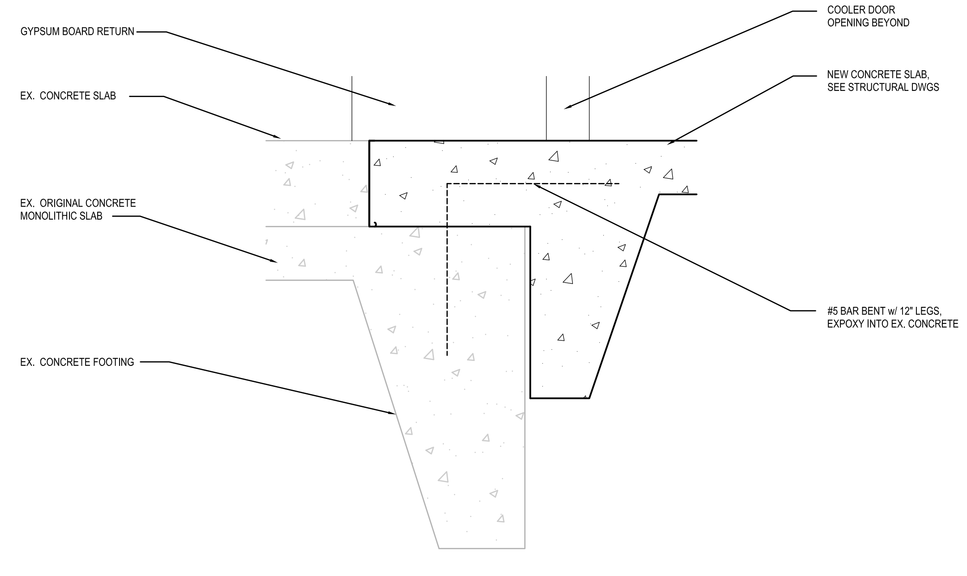

2 A1.5 COOLER SILL DETAIL
SCALE: 1 1/2" = 1'-0"

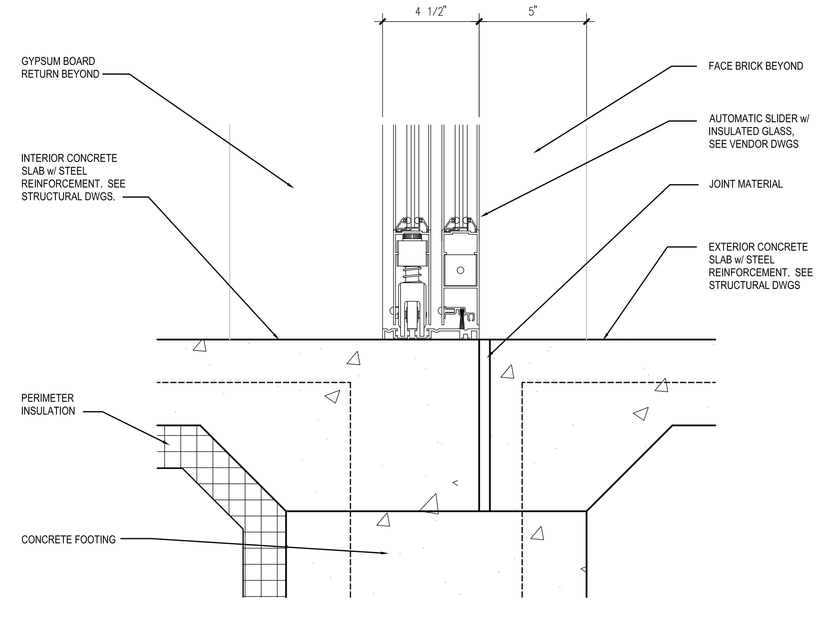

3 A1.5 SLIDER SILL DETAIL
SCALE: 3" = 1'-0"

DATES AND REVISIONS

No.	Date/Description
	04.11.12 – BID

EXCHANGE™

RICHARD L. BOWEN + ASSOCIATES INC.
13000 Shaker Boulevard / Cleveland, Ohio 44120
Phone: (216) 491-9300 Fax: (216) 491-8053
www.rlba.com - email@rlba.com

FT. MYER EXCHANGE
JBMHH - MYER
ARLINGTON, VIRGINIA

DOOR DETAILS

DRAWN BY: RTV
CHECKED BY: --
RLB NO.: 7800.02

DRAWING NO.
A1.5

P:\7800\7800.02 FT. MYER PX IMAGE UPGRADE CONST. CONTRACT DOCS\ARCH\7800002_A01-05.DWG | PLOTTED 04.09.2012 09:25AM BY ANDREW HENLEY

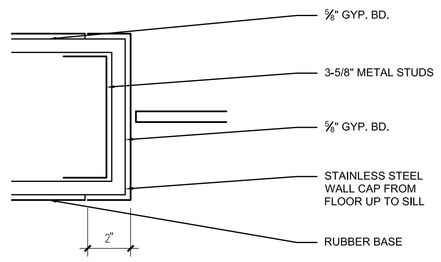

A / A1.6 STOREFRONT JAMB
SCALE: 3" = 1'-0"

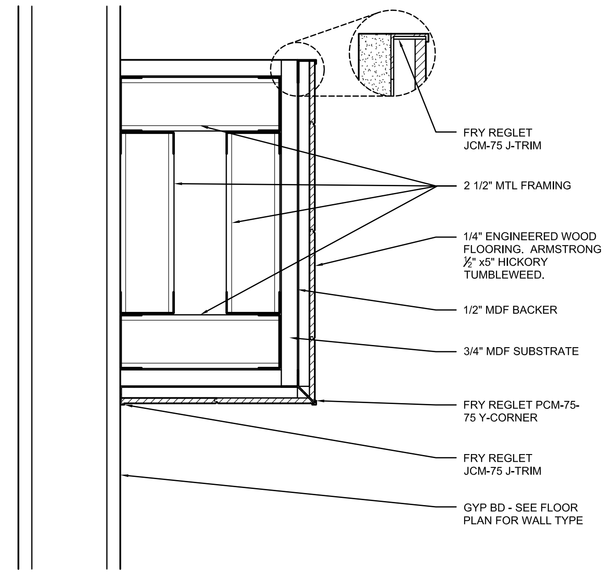

B / A1.6 PORTAL HEAD
SCALE: 3" = 1'-0"

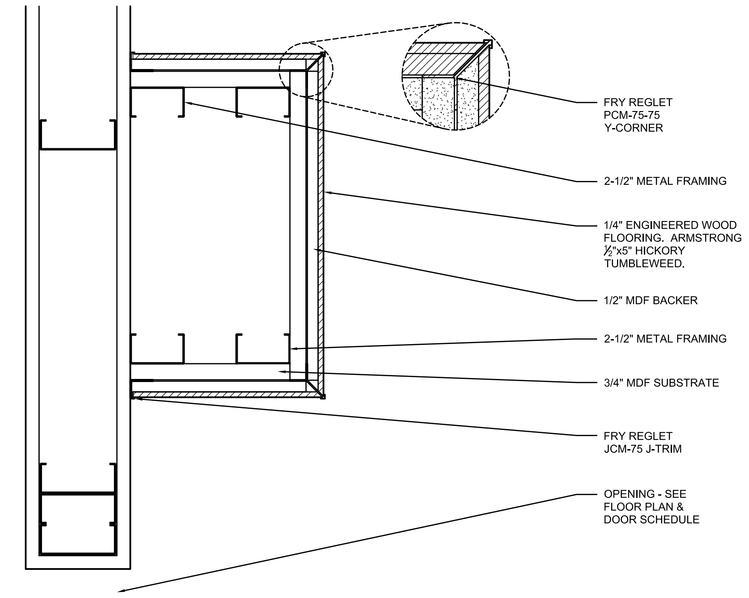

C / A1.6 PORTAL PLAN SECTION
SCALE: 3" = 1'-0"

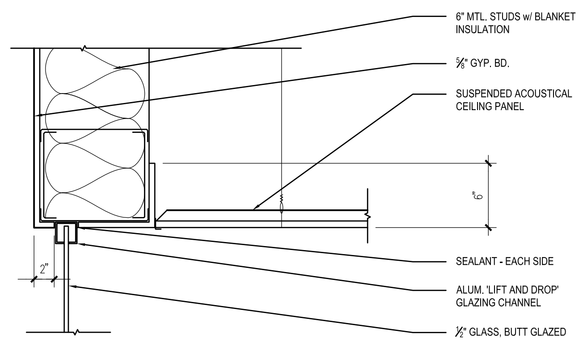

D / A1.6 STOREFRONT HEAD
SCALE: 1 1/2" = 1'-0"

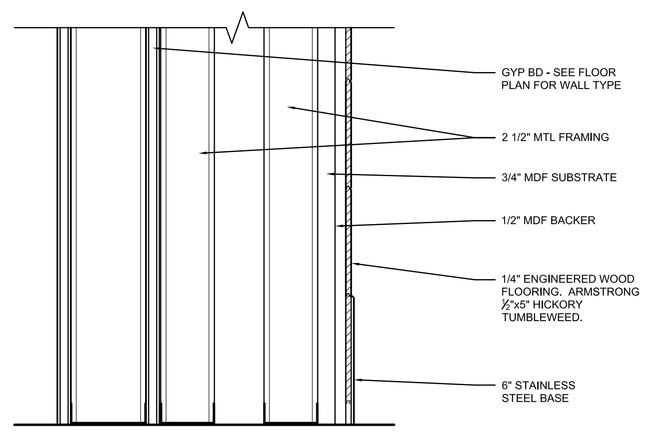

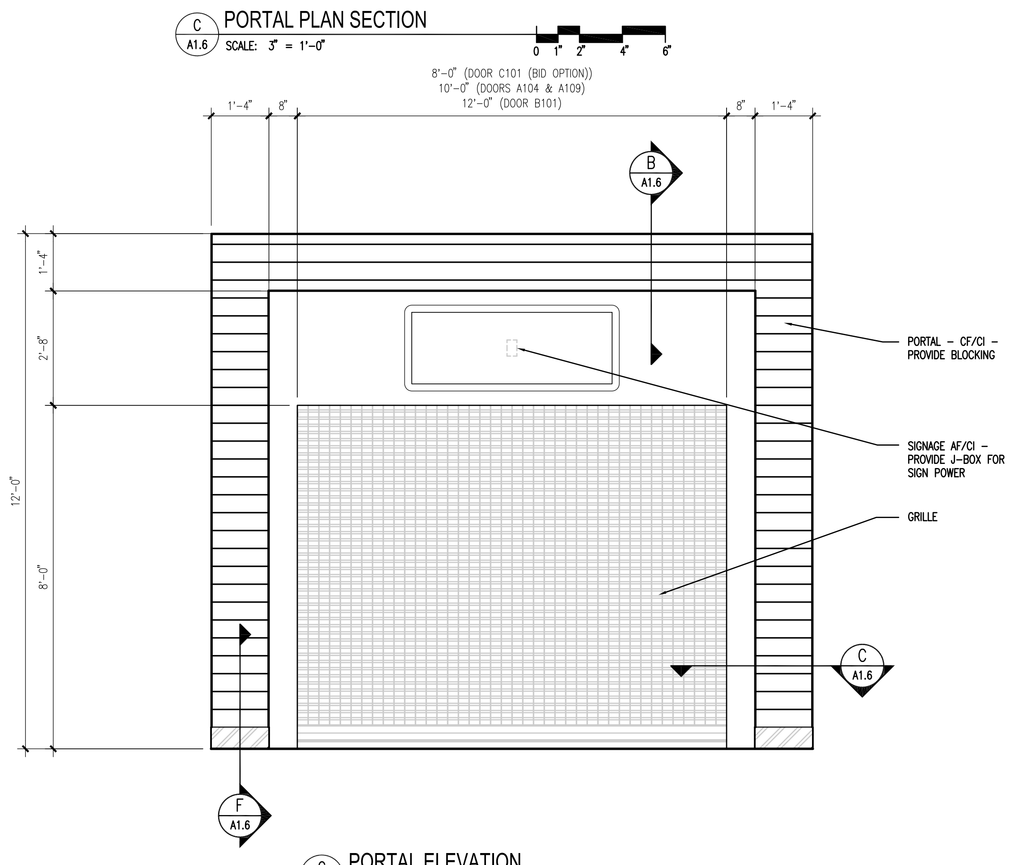

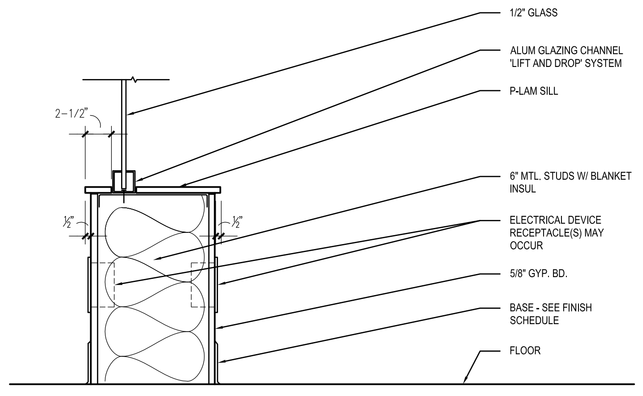

E / A1.6 STOREFRONT BASE
SCALE: 1 1/2" = 1'-0"

F / A1.6 PORTAL SECTION
SCALE: 3" = 1'-0"

G / A1.6 PORTAL ELEVATION
SCALE: 1/2" = 1'-0"

PARTITION TYPE NOTES:

1. ALL GYPSUM BOARD PARTITIONS SHALL BE LATERALLY BRACED TO DECK / STRUCTURE ABOVE @ 4'-0" O.C. OR MORE FREQUENTLY WHERE INDICATED.
2. IF A GYPSUM BOARD / METAL STUD WALL OCCURS WITHIN THE ROOMS LISTED BELOW, THEN ALL GYPSUM BOARD SHALL BE WATER RESISTANT TYPE, TYP.
   A. TOILET ROOMS
   B. SHOWERS
   C. JANITOR CLOSETS
   D. KITCHEN
3. PROVIDE CEMENTITIOUS BACKER BOARD @ ALL GYPSUM WALLBOARD PARTITIONS TO RECEIVE TILE FINISH.
4. PROVIDE CONTROL JOINTS IN ALL GYPSUM BOARD WALLS THAT EXCEED 30 FEET IN LENGTH. CONTROL JOINTS SHALL BE SPACED NOT MORE THAN 30 FEET ON CENTER
5. SEE SHEET A1.7 FOR GYPSUM BOARD CEILING DETAILS.

LEGEND

PARTITION MATERIAL	F-FURRING G-GYPSUM M-MASONRY
NOMINAL HEIGHT	F-FULL HEIGHT TO STRUCTURE P-PARTIAL HEIGHT ABOVE CEILING K-KNEEWALL BELOW CEILING C-PARTIAL HEIGHT TO CEILING
SOUND ATTENUATION	A-SOUND ATTENUATION
PARTITION RATING	1-1 HOUR FIRE RATED
ACCESSORIES	R-RESILIENT CHANNELS P-PLYWOOD

G7-F
A-1 R

- PARTITION MATERIAL
- NOMINAL DEPTH
- PARTITION HEIGHT
- INDICATES ACCESSORIES
- INDICATES RATED/NO. OF HOURS
- INDICATES SOUND ATTENUATION

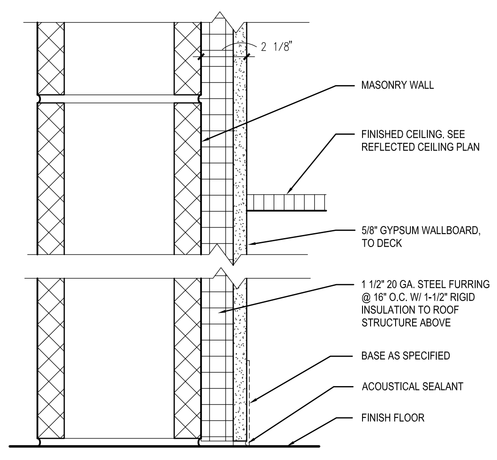

G2-F
WALL TYPE AT ALL EXTERIOR MASONRY WALLS U.N.O.

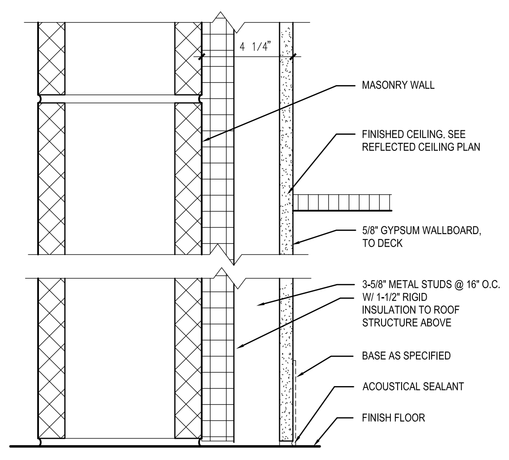

G4-F
WALL TYPE AT ALL EXTERIOR MASONRY WALLS U.N.O.

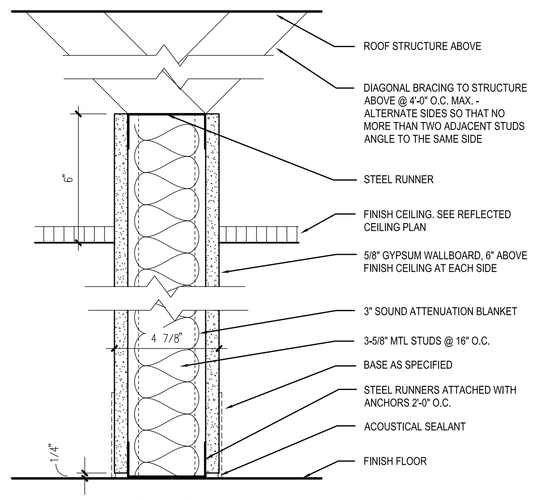

G5-P
A

G7-P
A
(6" METAL STUDS @ 16" O.C.)

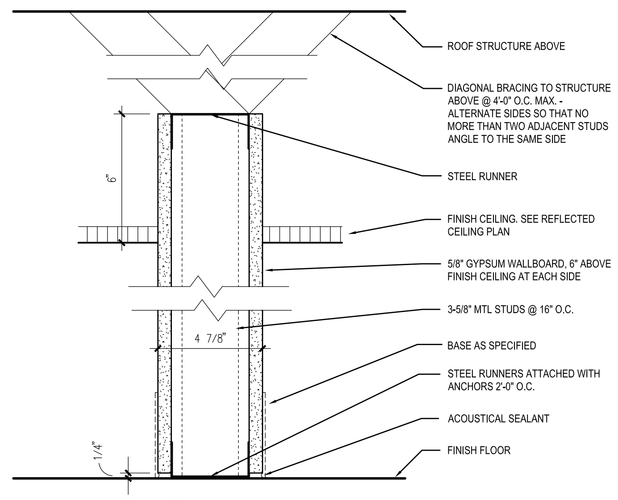

G5-P

G7-P
(6" METAL STUDS @ 16" O.C.)

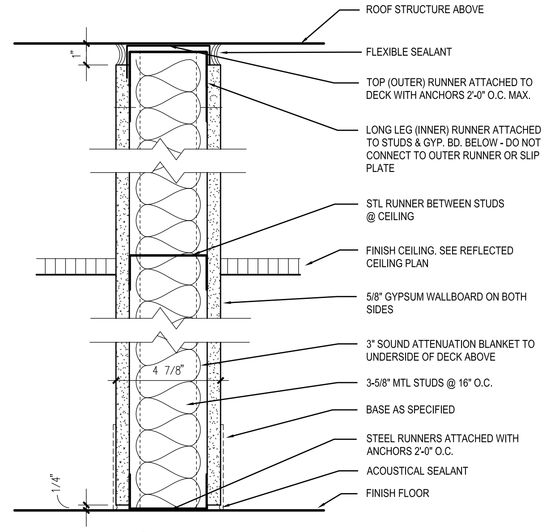

G5-F
A

1 / A1.6 INTERIOR WALL TYPES
SCALE: 3" = 1'-0"

DATES AND REVISIONS	
No.	Date/Description
	04.11.12 – BID

EXCHANGE™

RICHARD L. BOWEN + ASSOCIATES INC.
ARCHITECTS • ENGINEERS • MANAGERS • CONSTRUCTION
13000 Shaker Boulevard / Cleveland, Ohio 44120
Phone: (216) 491-9300 Fax: (216) 491-9053
www.rlba.com - email@rlba.com

FT. MYER EXCHANGE
JBMHH - MYER
ARLINGTON, VIRGINIA

WALL TYPES & DETAILS

DRAWN BY: RTV
CHECKED BY: ---
RLB NO.: 7800.02

DRAWING NO.
A1.6

P:\7800\7800.02 FT. MYER PX IMAGE UPGRADE CONST. CONTRACT DOCS\WRSP\780002_A01-06.DWG | PLOTTED 04-26-2012 04:18PM BY RYAN VANJO

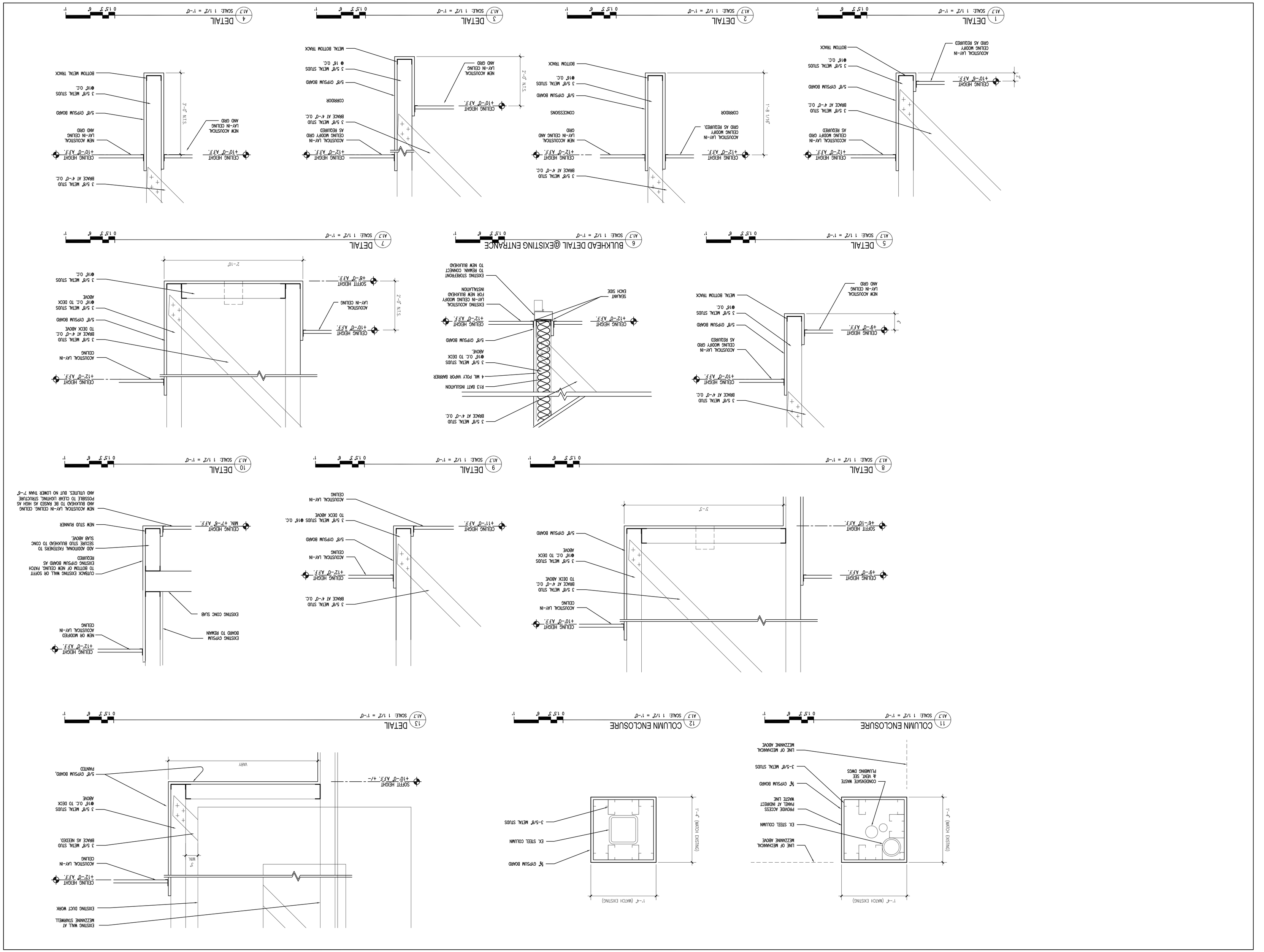

PA:\7800\7800.02 FT. MYER PX IMAGE UPGRADE CONST. CONTRACT DOCS\ARCH\7800002_A01-07.DWG | PLOTTED 04.09.2012 09:22AM BY ANDREW HENLEY

DATES AND REVISIONS

No.	Date/Description
	04.11.12 - BID

EXCHANGE™

RICHARD L. BOWEN + ASSOCIATES INC.
13000 Shaker Boulevard / Cleveland, Ohio 44120
Phone: (216) 491-0300 Fax: (216) 491-8053
www.rlba.com - email@rlba.com

FT. MYER EXCHANGE
JBMHH - MYER
ARLINGTON, VIRGINIA
COLUMN ENCLOSURES
CEILING DETAILS

DRAWN BY: RW
CHECKED BY: -
RLB NO.: 7800.02

DRAWING NO. A1.7

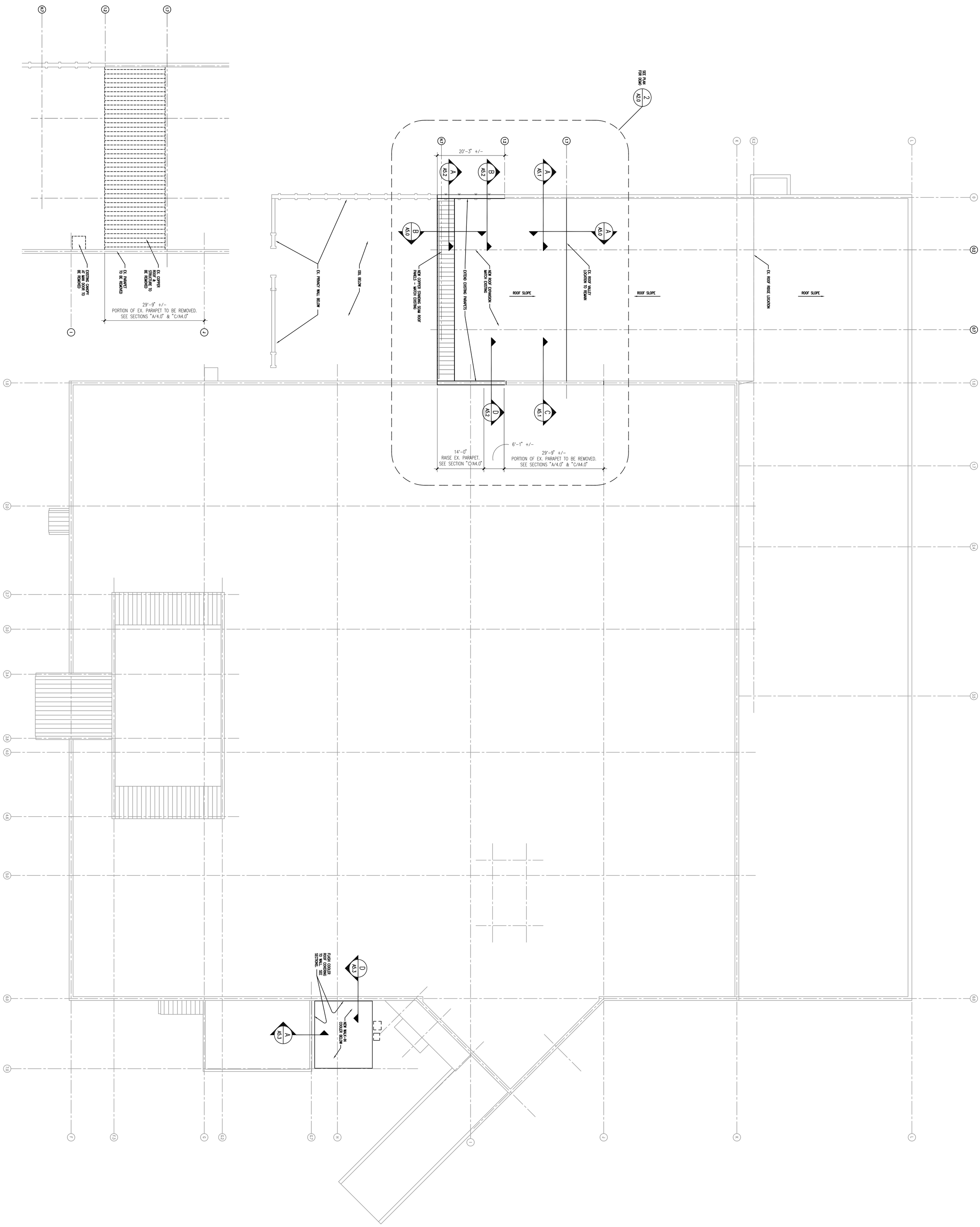

DRAWING NO. A2.0

RLB NO.: 7800.02
CHECKED BY: --
DRAWN BY: RTV

FT. MYER EXCHANGE
JBMHH - MYER
ARLINGTON, VIRGINIA

ROOF PLAN

RICHARD L. BOWEN + ASSOCIATES INC.
13000 Shaker Boulevard / Cleveland, Ohio 44120
Phone: (216) 491-9300 Fax: (216) 491-8053
www.rlba.com - email@rlba.com

EXCHANGE™

DATES AND REVISIONS

No.	Date/Description
	04.11.12 – BID

SHEET KEY

GX-xx-xx SEE GRAPHICS SCHEDULE

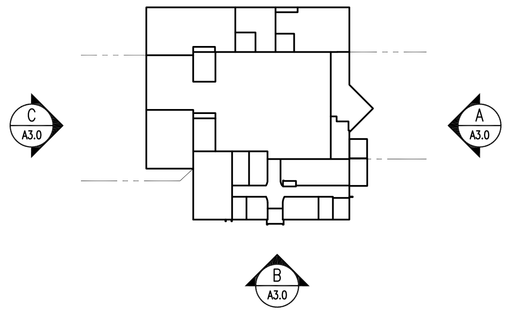

KEY PLAN

SCALE: N.T.S.

TRUE NORTH

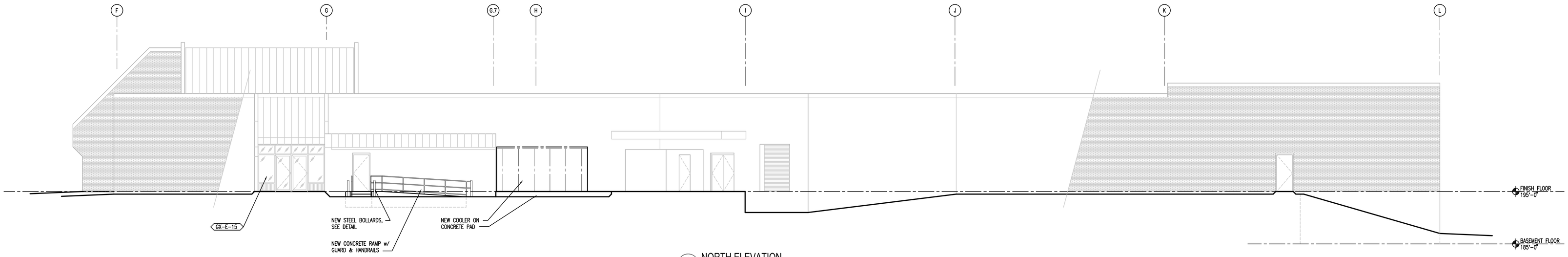

A A3.0 NORTH ELEVATION

SCALE: 1/8" = 1'-0"

0 1' 2' 4' 8'

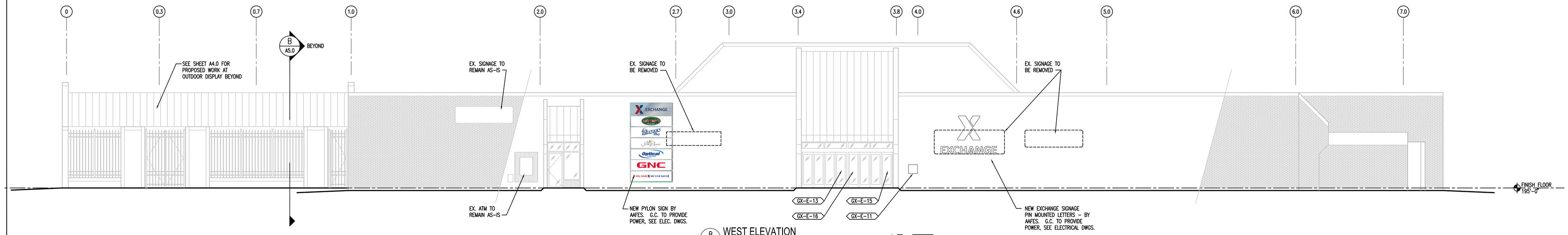

B A3.0 WEST ELEVATION

SCALE: 1/8" = 1'-0"

0 1' 2' 4' 8'

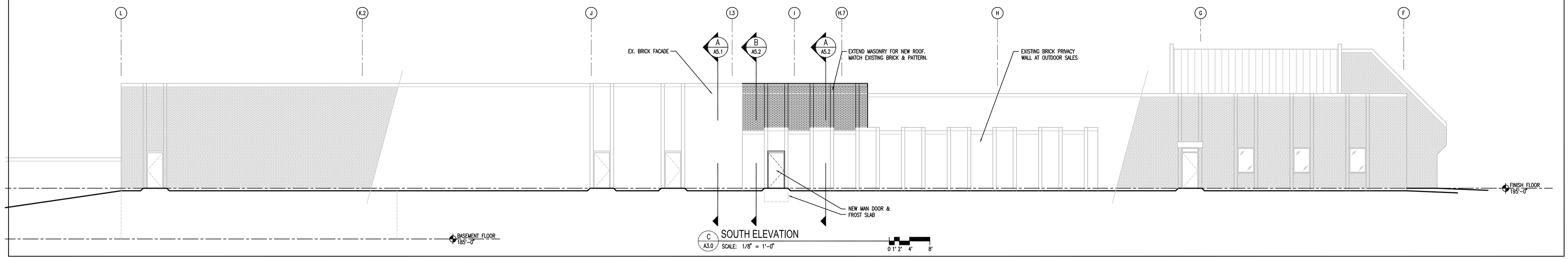

C A3.0 SOUTH ELEVATION

SCALE: 1/8" = 1'-0"

0 1' 2' 4' 8'

DATES AND REVISIONS	
No.	Date/Description
	04.11.12 - BID

EXCHANGE™

RICHARD L. BOWEN + ASSOCIATES INC.
ARCHITECTS • ENGINEERS • MANAGERS • CONSTRUCTION
13000 Shaker Boulevard / Cleveland, Ohio 44120
Phone: (216) 491-9300 Fax: (216) 491-8053
www.rlba.com - email@rlba.com

FT. MYER EXCHANGE

JBMHH - MYER
ARLINGTON, VIRGINIA

BUILDING ELEVATIONS

DRAWN BY: RTV

CHECKED BY: --

RLB NO.: 7800.02

DRAWING NO.

A3.0

P:\7800\7800.02 FT. MYER PX IMAGE UPGRADE CONST. CONTRACT DOCS\ARCH\7800.02_A03-00.DWG | PLOTTED 04.09.2012 09:30AM BY ANDREW HENLEY

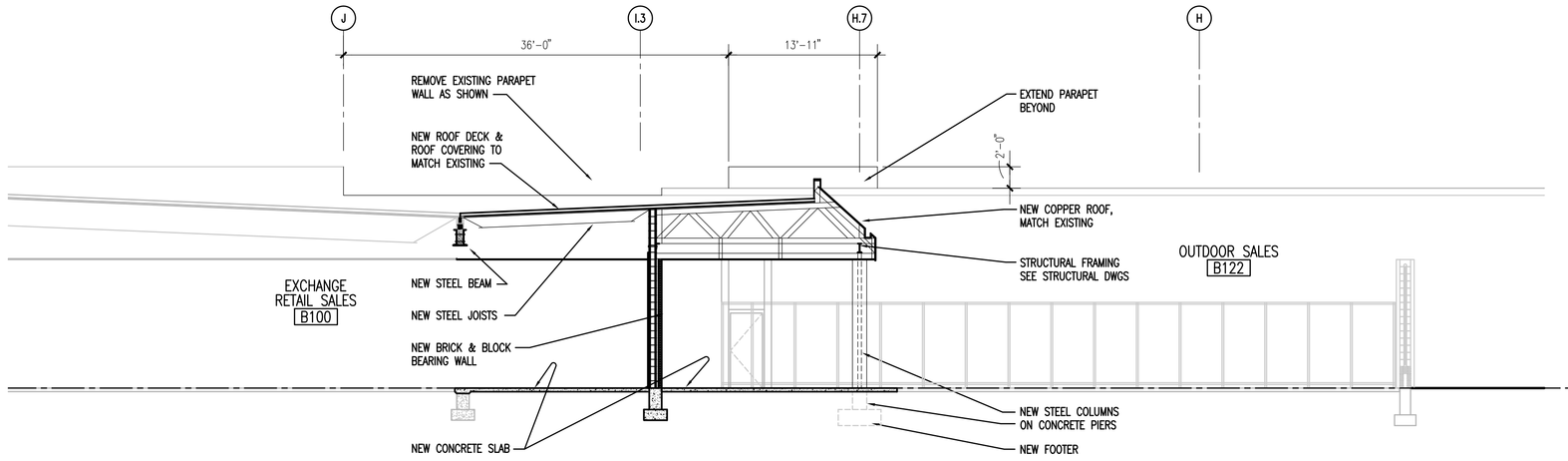

C A4.0 OUTDOOR DISPLAY BUILDING SECTION
SCALE: 1/8" = 1'-0"

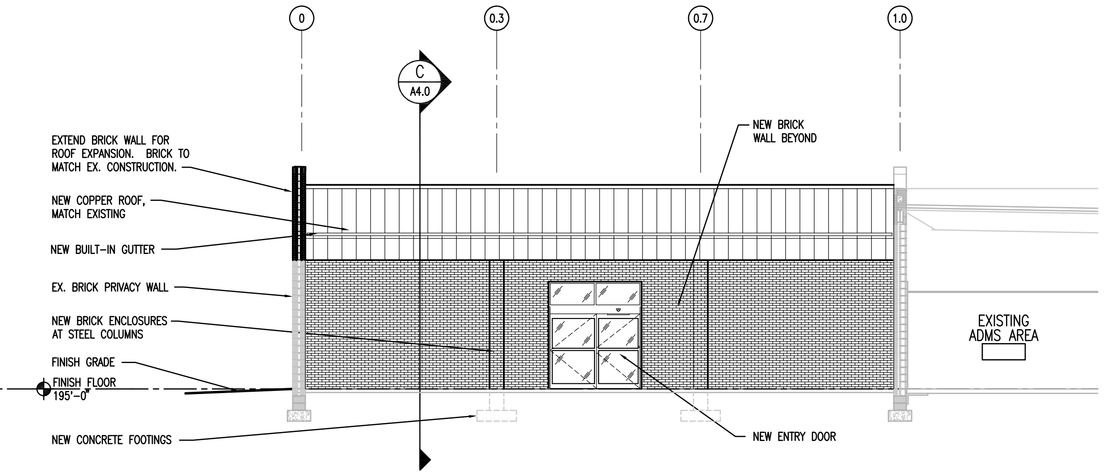

D A4.0 WEST ELEVATION
SCALE: 1/8" = 1'-0"

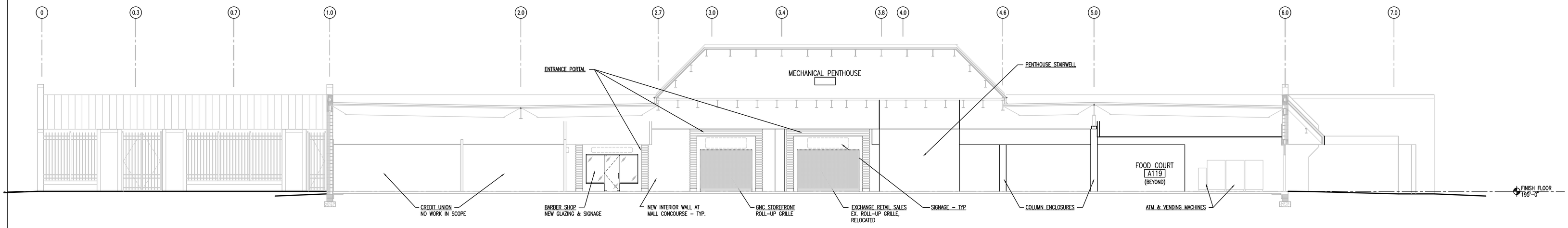

B A4.0 BUILDING SECTION
SCALE: 1/8" = 1'-0"

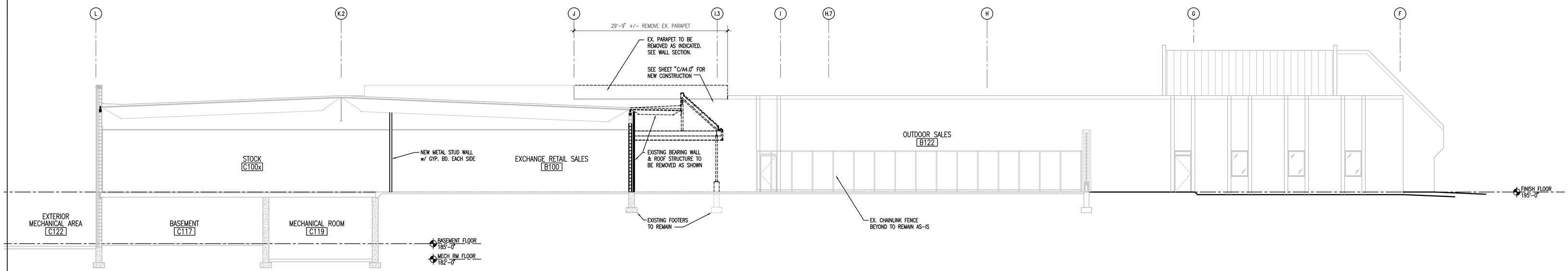

A A4.0 BUILDING SECTION
SCALE: 1/8" = 1'-0"

DATES AND REVISIONS	
No.	Date/Description
	04.11.12 - BID

EXCHANGE™

RICHARD L. BOWEN + ASSOCIATES INC.
13000 Shaker Boulevard / Cleveland, Ohio 44120
Phone: (216) 491-9300 Fax: (216) 491-9053
www.rlba.com - email@rlba.com

FT. MYER EXCHANGE
JBMHH - MYER
ARLINGTON, VIRGINIA

BUILDING SECTIONS

DRAWN BY: RTV
CHECKED BY: -
RLB NO.: 7800.02

DRAWING NO.
A4.0

P:\7800\7800.02 FT. MYER PX IMAGE UPGRADE CONST. CONTRACT DOCS\ARCH\7800.02_A04-00.DWG | PLOTTED 04.09.2012 09:30AM BY ANDREW HENLEY

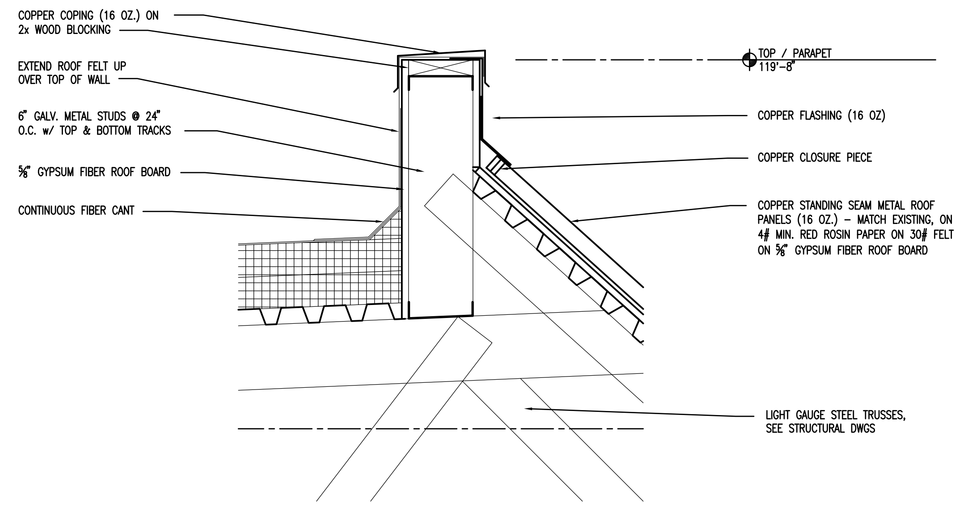

1 A5.0 DETAIL
SCALE: 1 1/2" = 1'-0"
0 1.5" 3" 6" 1'

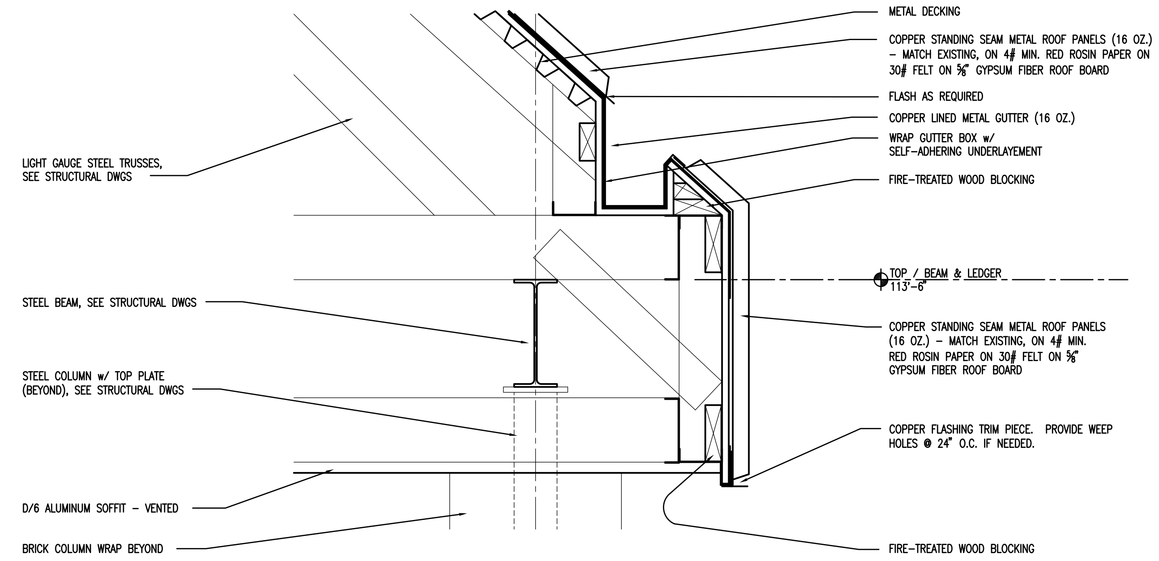

2 A5.0 DETAIL
SCALE: 1 1/2" = 1'-0"
0 1.5" 3" 6" 1'

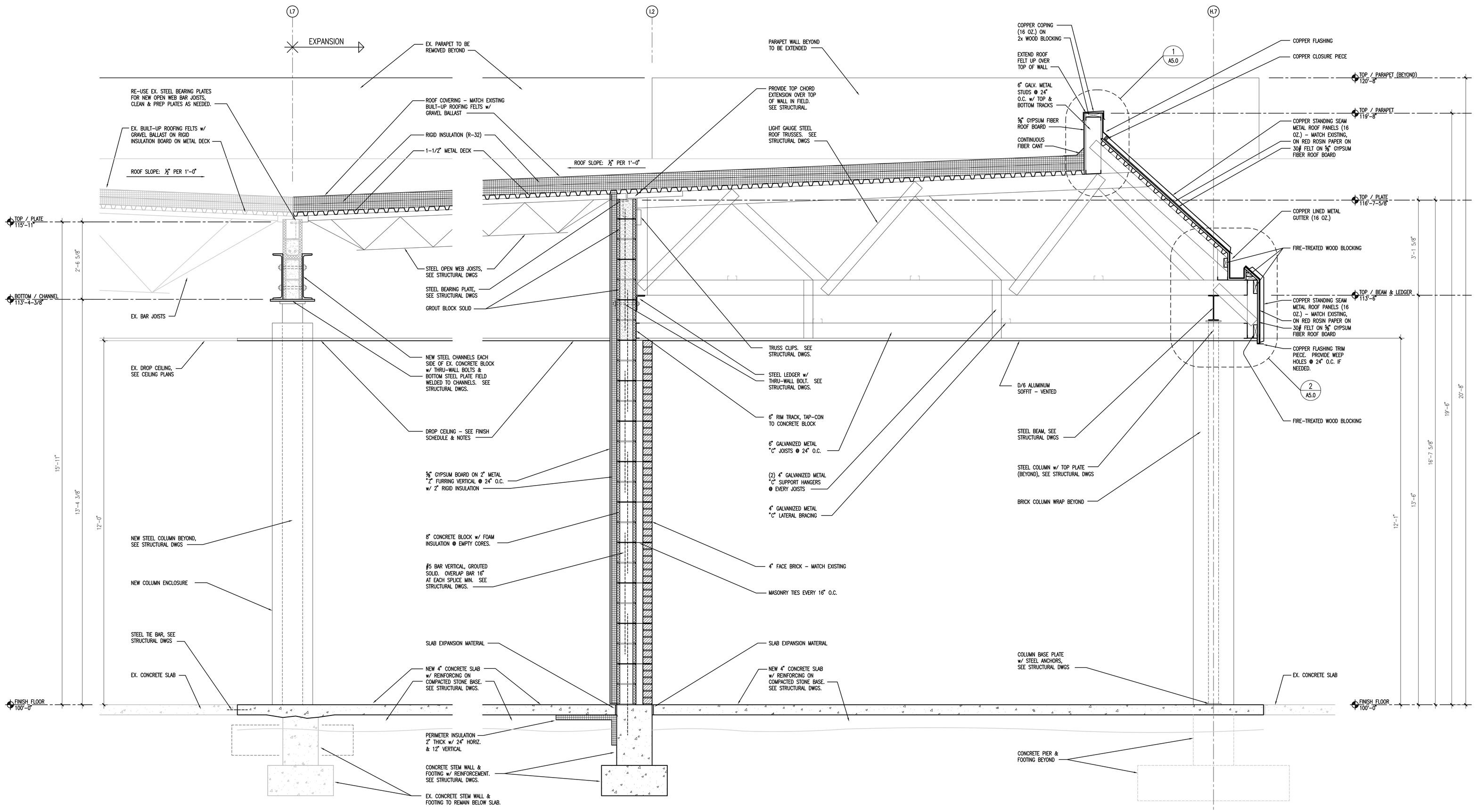

A A5.0 WALL SECTION
SCALE: 3/4" = 1'-0"
0 3" 6" 1' 2'

B A5.0 WALL SECTION
SCALE: 3/4" = 1'-0"
0 3" 6" 1' 2'

P:\7800\7800.02 FT. MYER PX IMAGE UPGRADE CONST. CONTRACT DOCS\ARCH\780002_A05-00.DWG | PLOTTED 04.09.2012 09:33AM BY ANDREW HENLEY

DATES AND REVISIONS

No.	Date/Description
	04.11.12 – BID

EXCHANGE™

RICHARD L. BOWEN + ASSOCIATES INC.
ARCHITECTS • ENGINEERS • CONSTRUCTION MANAGERS
13000 Shaker Boulevard | Cleveland, Ohio 44120
Phone: (216) 491-5900 Fax: (216) 491-5053
www.rlba.com - email@rlba.com

FT. MYER EXCHANGE
JBMHH - MYER
ARLINGTON, VIRGINIA

WALL SECTIONS & DETAILS

DRAWN BY: RTV
CHECKED BY: --
RLB NO.: 7800.02

DRAWING NO.
A5.0

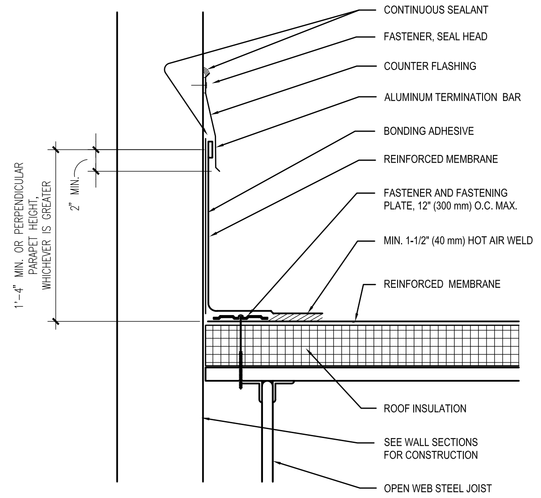

1 A5.1 PARAPET FLASHING
SCALE: 1 1/2" = 1'-0"

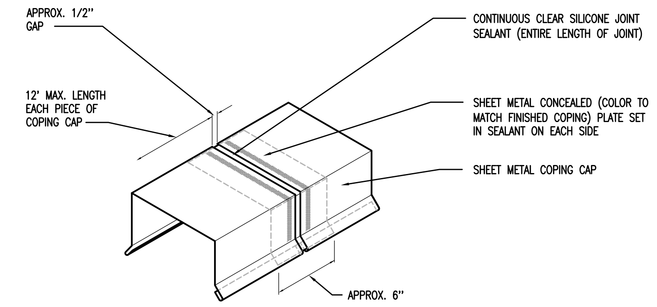

2 A5.1 COPING CAP WITH CONCEALED PLATE
SCALE: 1 1/2" = 1'-0"

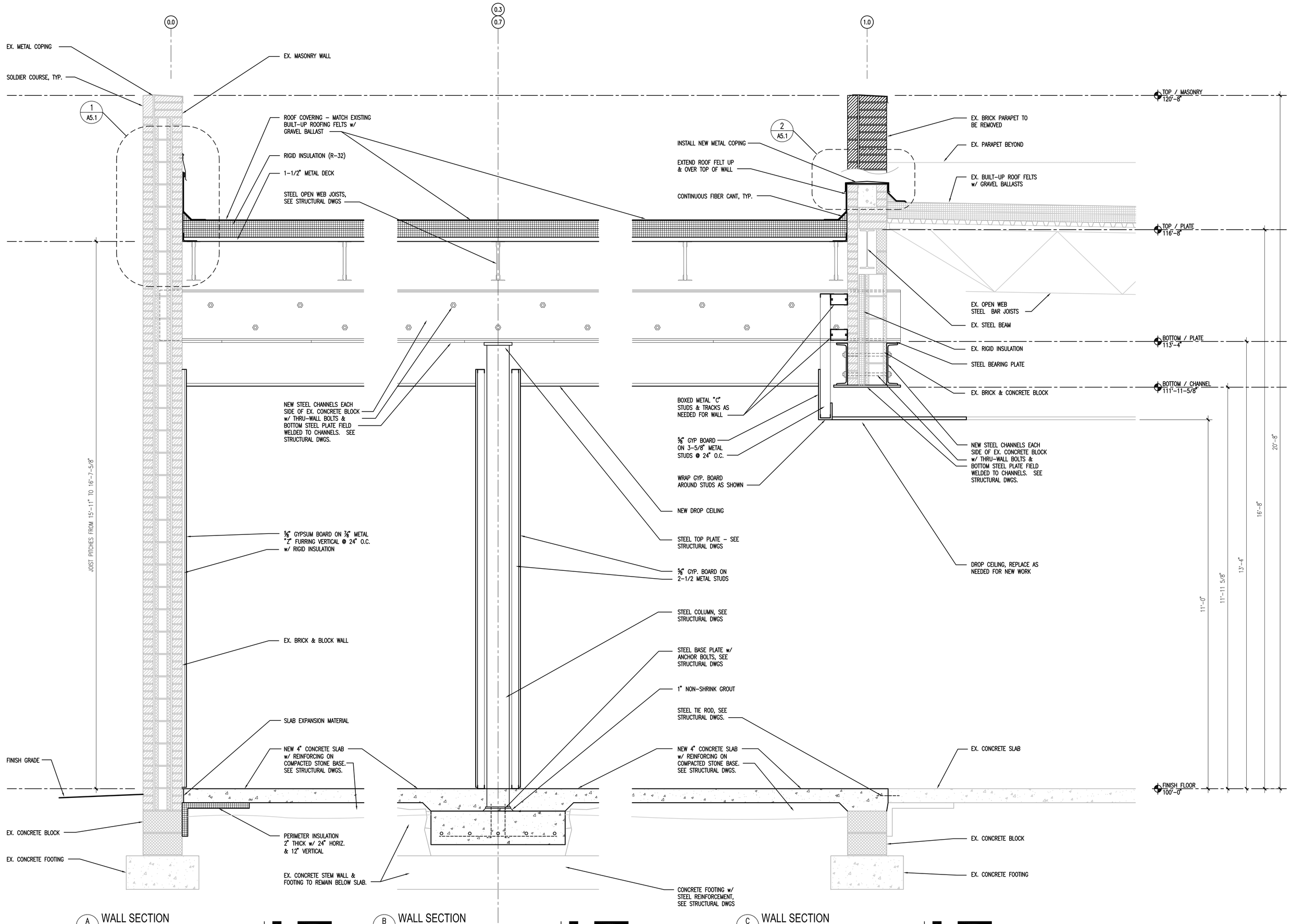

A A5.1 WALL SECTION
SCALE: 3/4" = 1'-0"

B A5.1 WALL SECTION
SCALE: 3/4" = 1'-0"

C A5.1 WALL SECTION
SCALE: 3/4" = 1'-0"

DATES AND REVISIONS	
No.	Date/Description
	04.11.12 – BID

EXCHANGE™

RICHARD L. BOWEN + ASSOCIATES INC.
13000 Shaker Boulevard / Cleveland, Ohio 44120
Phone: (216) 491-5800 Fax: (216) 491-5053
www.rlba.com - email@rlba.com

FT. MYER EXCHANGE
JBMHH - MYER
ARLINGTON, VIRGINIA

WALL SECTIONS & DETAILS

DRAWN BY: RTV
CHECKED BY: --
RLB NO.: 7800.02

DRAWING NO.
A5.1

P:\7800\7800.02 FT. MYER PX IMAGE UPGRADE CONST. CONTRACT DOCS\ARCH\780002_A05-01.DWG | PLOTTED 04.09.2012 09:32AM BY ANDREW HENLEY

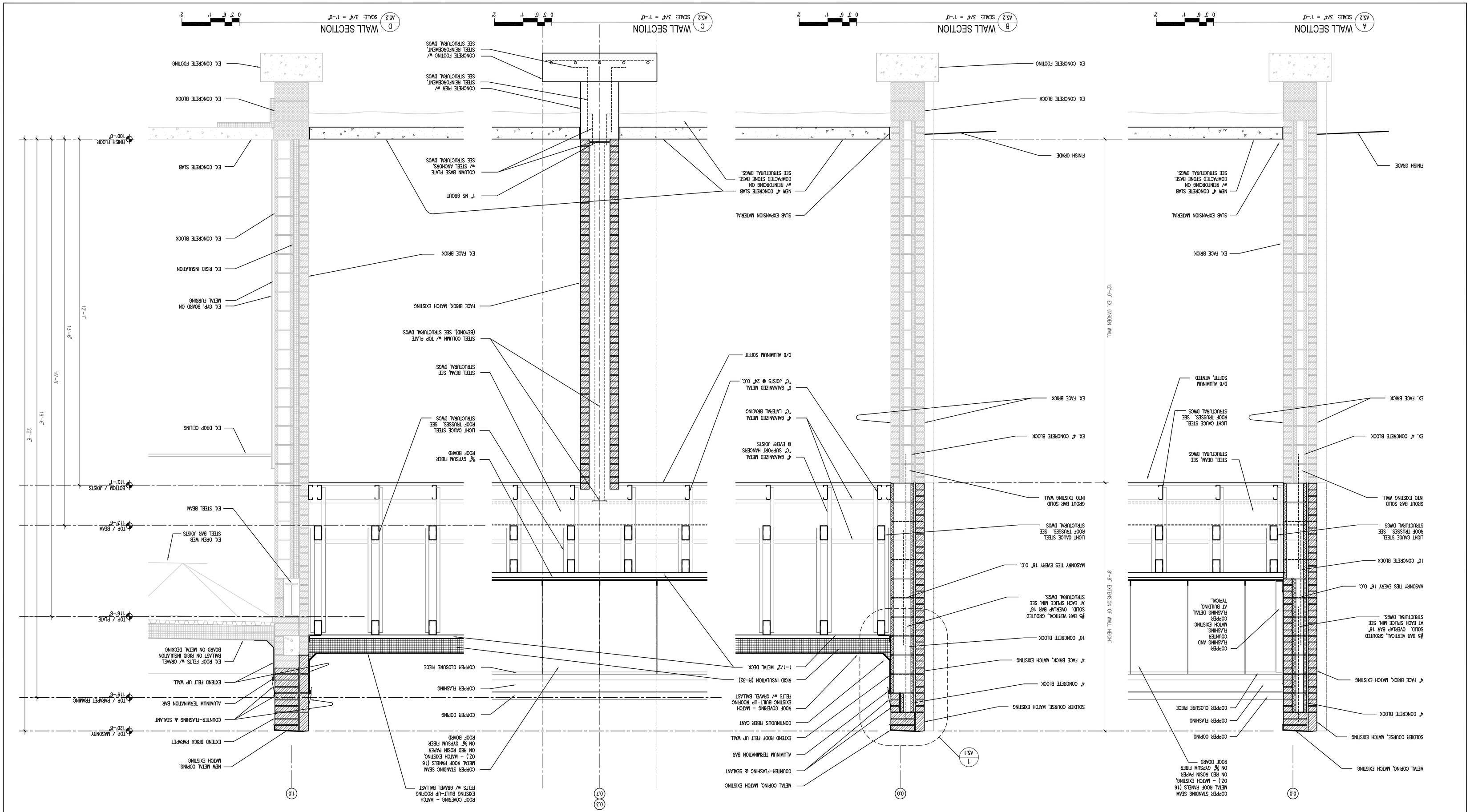

FT. MYER EXCHANGE

JBMHH - MYER
ARLINGTON, VIRGINIA

WALL SECTIONS & DETAILS

DRAWN BY: RIV
CHECKED BY: --
RLB NO.: 7800.02

DRAWING NO. A5.2

RICHARD L. BOWEN + ASSOCIATES INC.
13000 Shaker Boulevard / Cleveland, Ohio 44120
Phone: (216) 491-9300 Fax: (216) 491-9053
www.rlba.com - email@rlba.com

ARCHITECTS • ENGINEERS • CONSTRUCTION MANAGERS

EXCHANGE™

DATES AND REVISIONS

No.	Date/Description
	04.11.12 - BID

P:\7800\7800.02 FT. MYER PX IMAGE UPGRADE CONST. CONTRACT DOCS\ARCH\7800.02_A05-02.DWG | PLOTTED 04.26.2012 04:20PM BY RYAN VANJO

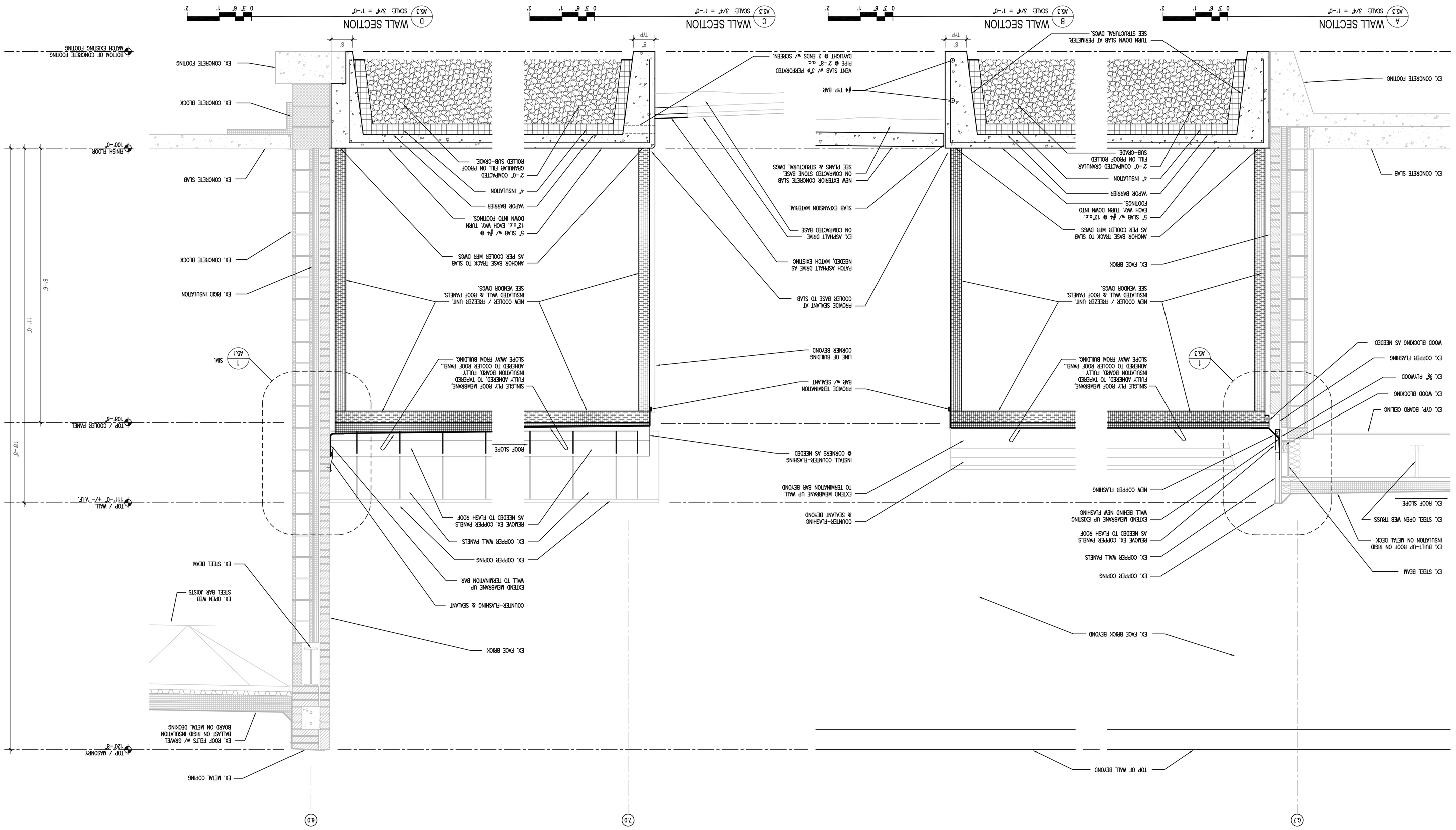

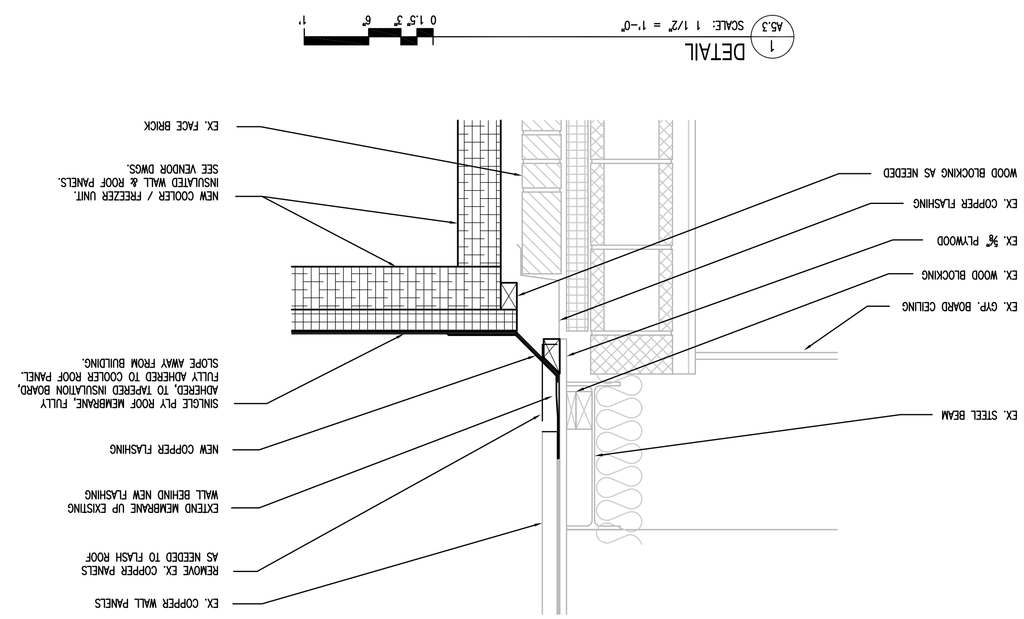

P:\7800\7800.02 FT. MYER FX IMAGE UPGRADE CONST. CONTRACT DOCS\ARCH\7800002_ACS-03.DWG | PLOTTED 04.09.2012 09:54AM BY ANDREW HENLEY

A5.3

DRAWING NO.

RLB NO.: 7800.02

CHECKED BY: --

DRAWN BY: RIV

FT. MYER EXCHANGE

JBMHH - MYER
ARLINGTON, VIRGINIA

WALL SECTIONS & DETAILS

RICHARD L. BOWEN + ASSOCIATES INC.
13000 Shaker Boulevard / Cleveland, Ohio 44120
Phone: (216) 491-0300 Fax: (216) 491-8053
www.rlba.com - email@rlba.com

EXCHANGE™

DATES AND REVISIONS

No.	Date/Description
	04.11.12 - BID

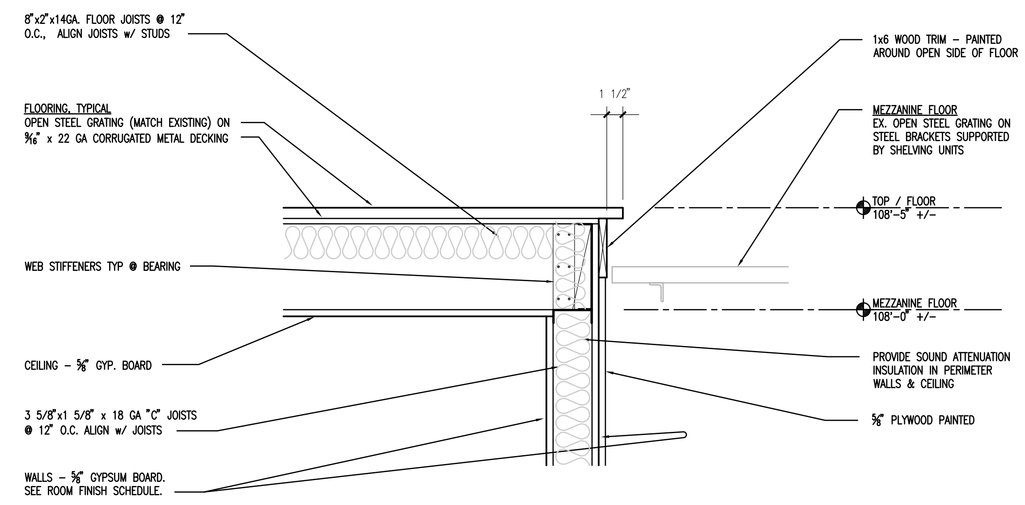

1 A5.4 MEZZANINE FLOOR DETAIL
SCALE: 1 1/2" = 1'-0"

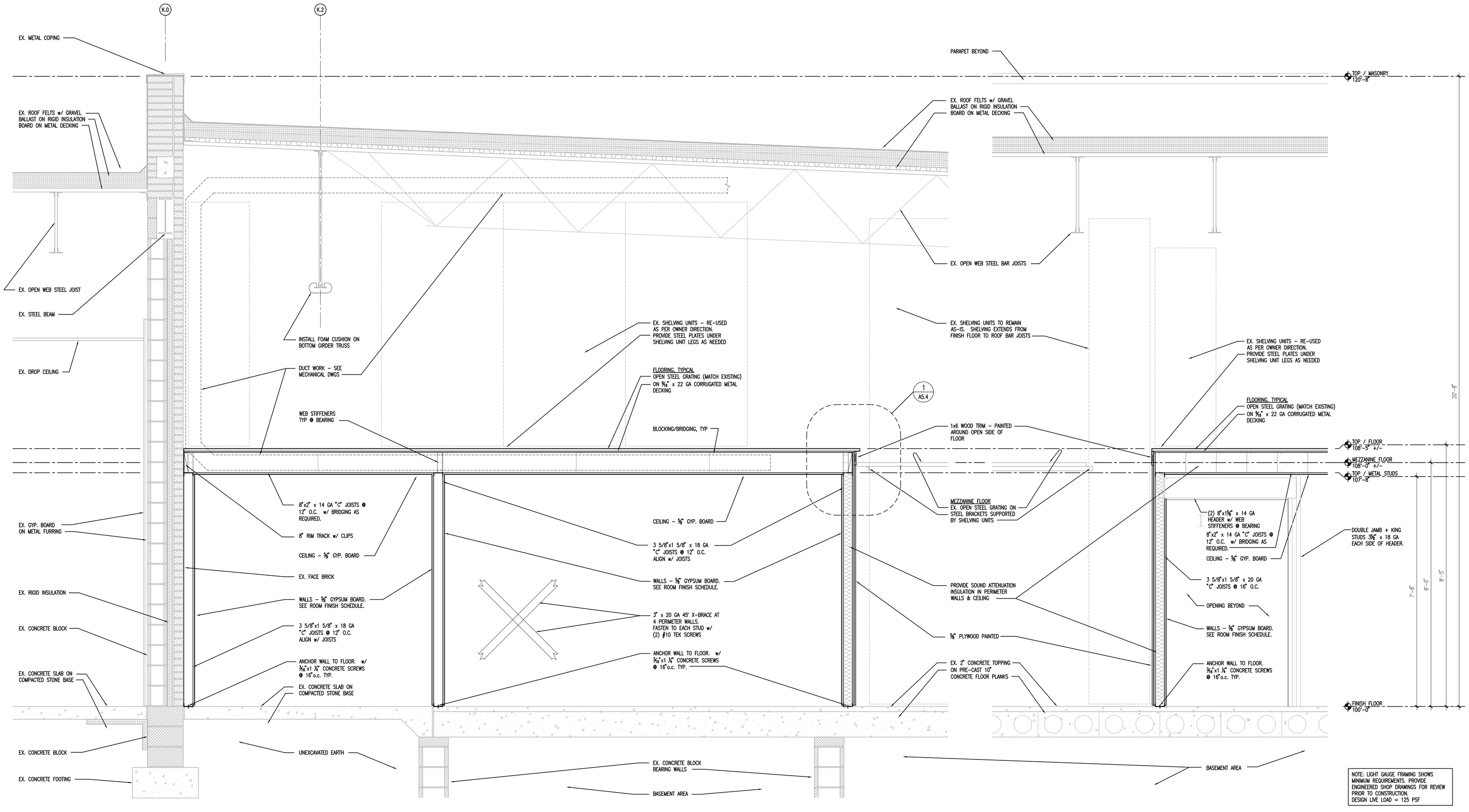

NOTE: LIGHT GAUGE FRAMING SHOWS MINIMUM REQUIREMENTS. PROVIDE ENGINEERED SHOP DRAWINGS FOR REVIEW PRIOR TO CONSTRUCTION. DESIGN LIVE LOAD = 125 PSF

A A5.4 WALL SECTION
SCALE: 3/4" = 1'-0"

B A5.4 WALL SECTION
SCALE: 3/4" = 1'-0"

DATES AND REVISIONS

No.	Date/Description
	04.11.12 – BID

EXCHANGE™

RICHARD L. BOWEN + ASSOCIATES INC.
13000 Shaker Boulevard / Cleveland, Ohio 44120
Phone: (216) 491-5300 Fax: (216) 491-5053
www.rlba.com - email@rlba.com

FT. MYER EXCHANGE
JBMHH - MYER
ARLINGTON, VIRGINIA

BID OPTION #2
WALL SECTIONS & DETAILS

DRAWN BY: RTV
CHECKED BY: --
RLB NO.: 7800.02

DRAWING NO.
A5.4

P:\7800\7800.02 FT. MYER PX IMAGE UPGRADE CONST. CONTRACT DOCS\ARCH\7800X2_A05-04.DWG | PLOTTED 04.09.2012 09:34AM BY ANDREW HENLEY

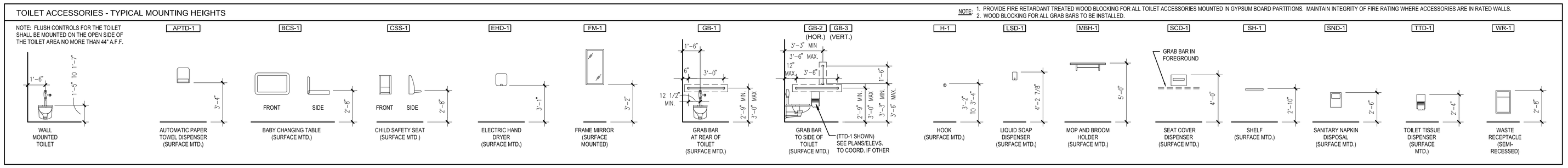

2 A6.0 TOILET ACCESSORIES - TYPICAL MOUNTING HEIGHTS
SCALE: 1/4" = 1'-0"

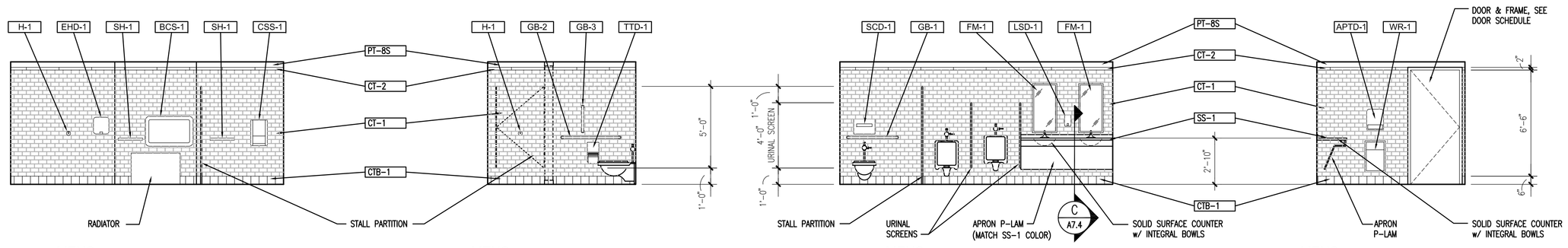

A A6.0 MENS INTERIOR ELEVATION
SCALE: 1/4" = 1'-0"

B A6.0 MENS INTERIOR ELEVATION
SCALE: 1/4" = 1'-0"

C A6.0 MENS INTERIOR ELEVATION
SCALE: 1/4" = 1'-0"

D A6.0 MENS INTERIOR ELEVATION
SCALE: 1/4" = 1'-0"

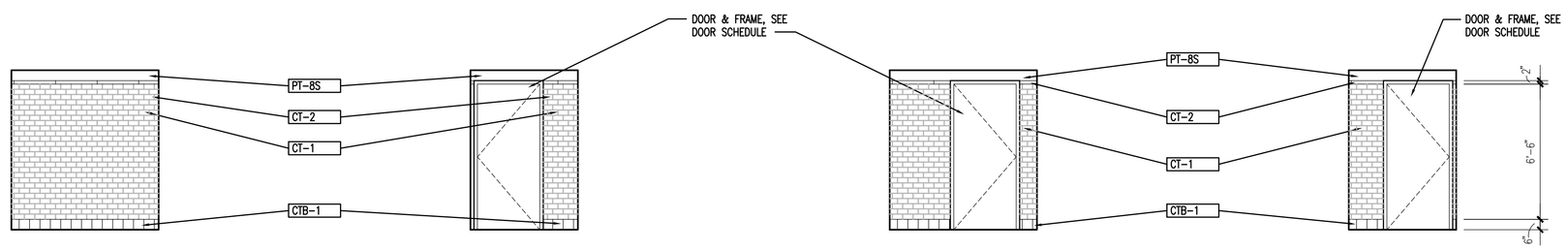

E A6.0 MENS ENTRY INTERIOR ELEVATION
SCALE: 1/4" = 1'-0"

F A6.0 MENS ENTRY INTERIOR ELEVATION
SCALE: 1/4" = 1'-0"

G A6.0 MENS ENTRY INTERIOR ELEVATION
SCALE: 1/4" = 1'-0"

H A6.0 MENS ENTRY INTERIOR ELEVATION
SCALE: 1/4" = 1'-0"

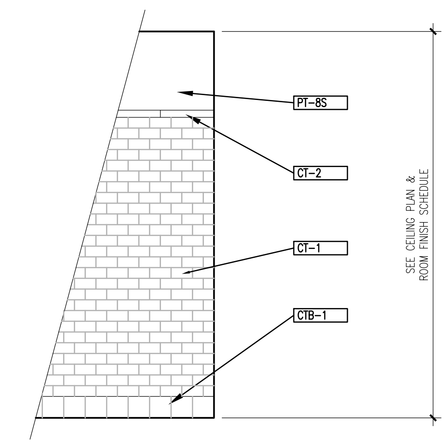

S A6.0 TYPICAL RESTROOM TILE LAYOUT DETAIL
SCALE: 1/2" = 1'-0"

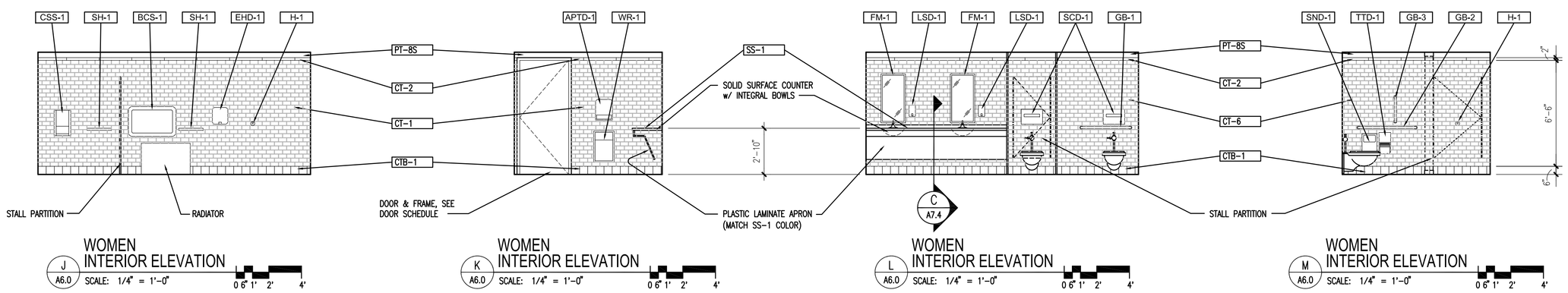

J A6.0 WOMEN INTERIOR ELEVATION
SCALE: 1/4" = 1'-0"

K A6.0 WOMEN INTERIOR ELEVATION
SCALE: 1/4" = 1'-0"

L A6.0 WOMEN INTERIOR ELEVATION
SCALE: 1/4" = 1'-0"

M A6.0 WOMEN INTERIOR ELEVATION
SCALE: 1/4" = 1'-0"

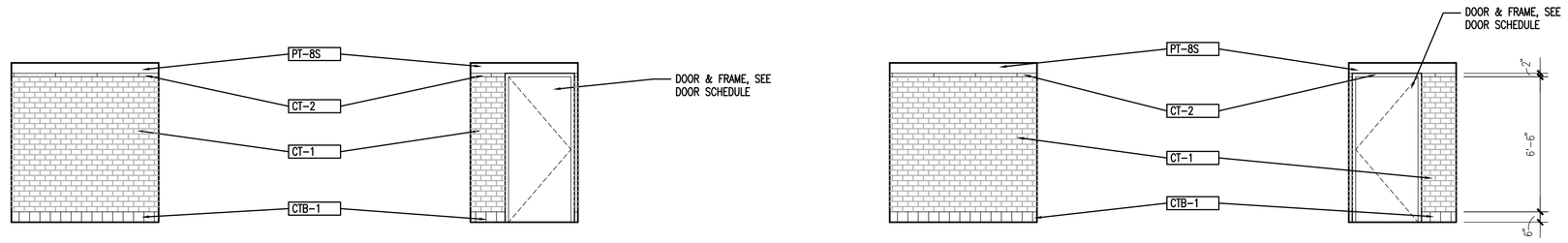

N A6.0 WOMEN'S ENTRY INTERIOR ELEVATION
SCALE: 1/4" = 1'-0"

P A6.0 WOMEN'S ENTRY INTERIOR ELEVATION
SCALE: 1/4" = 1'-0"

Q A6.0 WOMEN'S ENTRY INTERIOR ELEVATION
SCALE: 1/4" = 1'-0"

R A6.0 WOMEN'S ENTRY INTERIOR ELEVATION
SCALE: 1/4" = 1'-0"

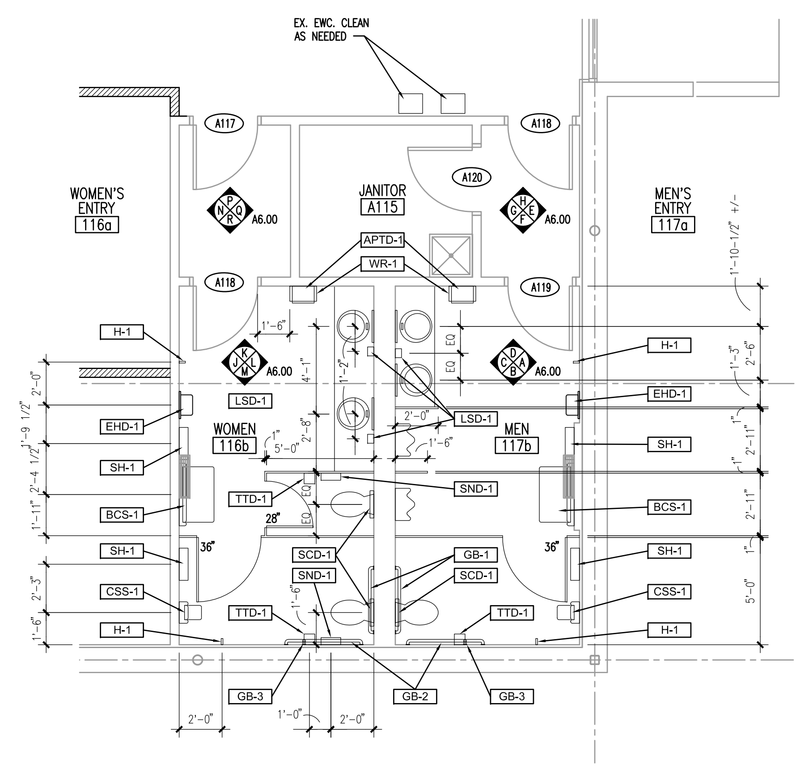

1 A6.0 ENLARGED PUBLIC RESTROOMS
SCALE: 1/4" = 1'-0"

TRUE NORTH

DATES AND REVISIONS

No.	Date/Description
	04.11.12 – BID

EXCHANGE™

RICHARD L. BOWEN + ASSOCIATES INC.
ARCHITECTS • ENGINEERS • MANAGERS • CONSULTANTS
13000 Shaker Boulevard / Cleveland, Ohio 44120
Phone: (216) 491-5900 Fax: (216) 491-5053
www.rlba.com - email@rlba.com

FT. MYER EXCHANGE
JBMHH - MYER
ARLINGTON, VIRGINIA

ENLARGED PUBLIC RESTROOMS

DRAWN BY: RTV
CHECKED BY: --
RLB NO.: 7800.02

DRAWING NO.
A6.0

P:\7800\7800.02 FT. MYER PX IMAGE UPGRADE CONST. CONTRACT DOCS\ARCH\780002_A06-00.DWG | PLOTTED 04.26.2012 03:11PM BY RVAN VANJO

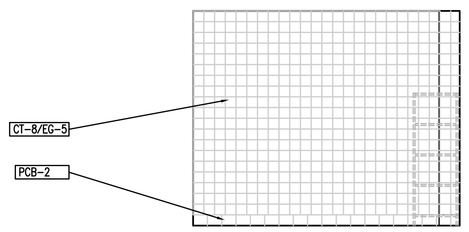

A A6.1 BREAK RM INTERIOR ELEVATION SCALE: 1/4" = 1'-0"

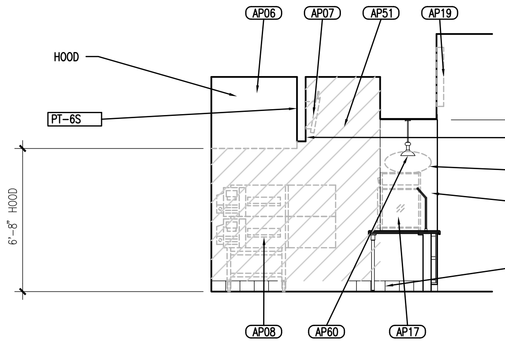

B A6.1 ANTHONY'S PIZZA INTERIOR ELEVATION SCALE: 1/4" = 1'-0"

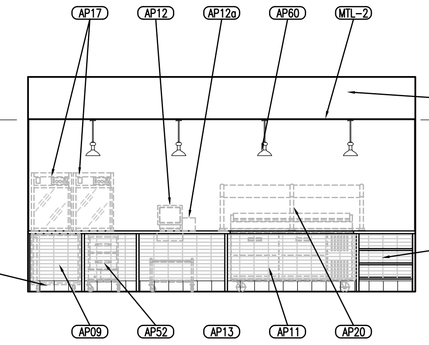

C A6.1 ANTHONY'S PIZZA INTERIOR ELEVATION SCALE: 1/4" = 1'-0"

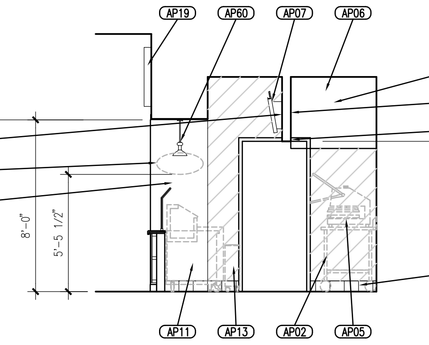

D A6.1 ANTHONY'S PIZZA INTERIOR ELEVATION SCALE: 1/4" = 1'-0"

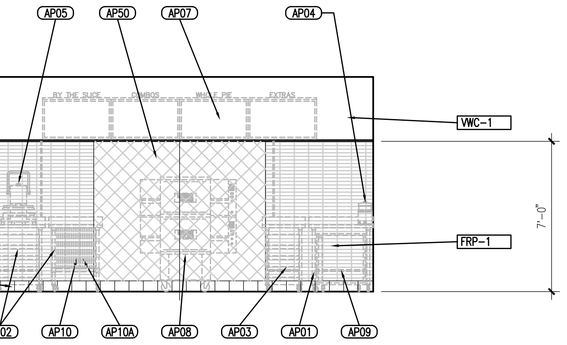

E A6.1 ANTHONY'S PIZZA INTERIOR ELEVATION SCALE: 1/4" = 1'-0"

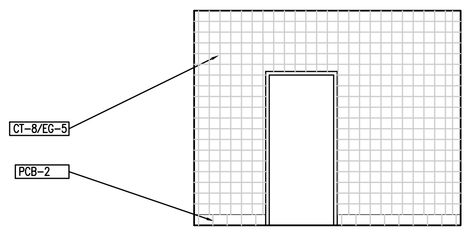

F A6.1 BREAK RM INTERIOR ELEVATION SCALE: 1/4" = 1'-0"

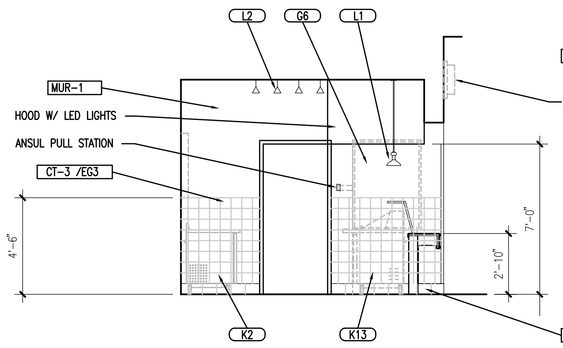

G A6.1 CHARLEY'S SUBS INTERIOR ELEVATION SCALE: 1/4" = 1'-0"

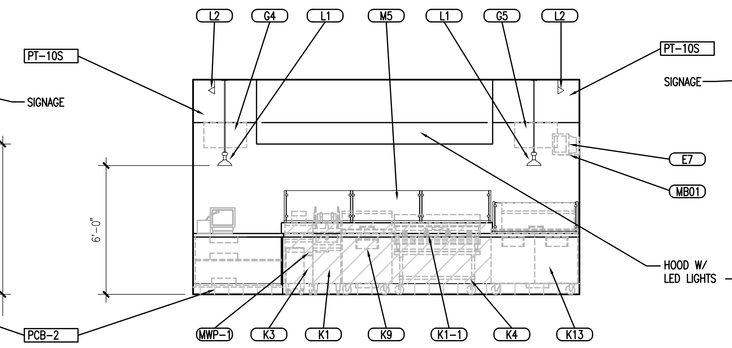

H A6.1 CHARLEY'S SUBS INTERIOR ELEVATION SCALE: 1/4" = 1'-0"

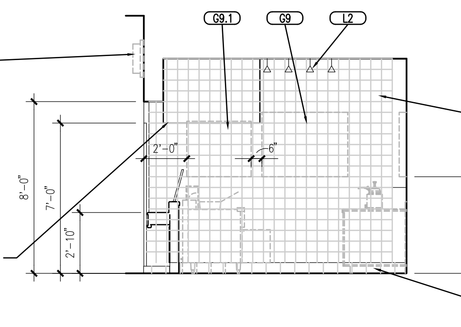

J A6.1 CHARLEY'S SUBS INTERIOR ELEVATION SCALE: 1/4" = 1'-0"

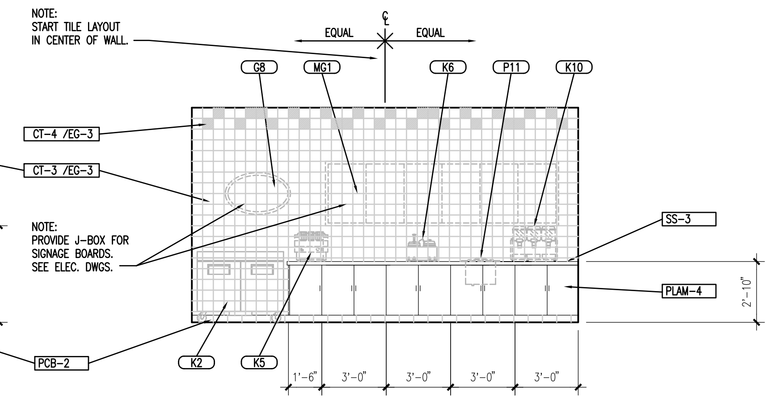

K A6.1 CHARLEY'S SUBS INTERIOR ELEVATION SCALE: 1/4" = 1'-0"

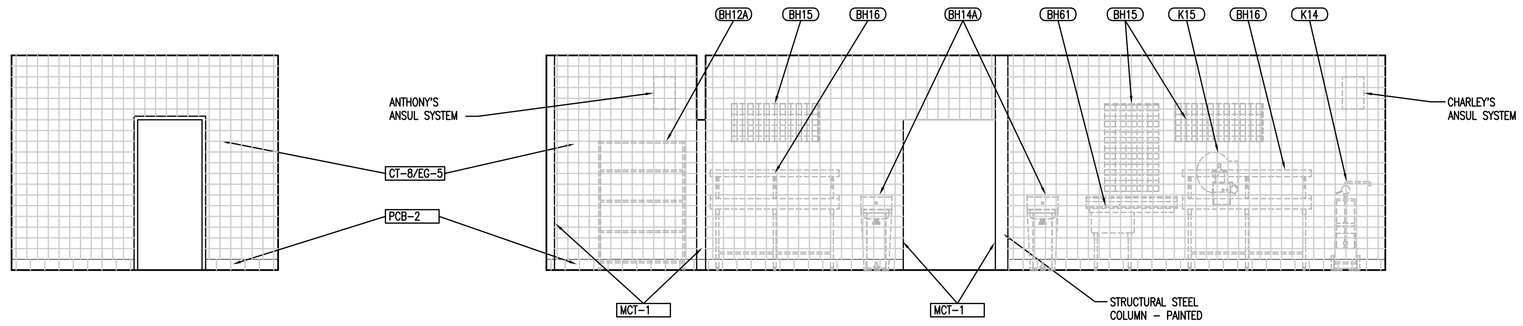

L A6.1 BACKROOM SUPPORT INTERIOR ELEVATION SCALE: 1/4" = 1'-0"

M A6.1 BACKROOM SUPPORT INTERIOR ELEVATION SCALE: 1/4" = 1'-0"

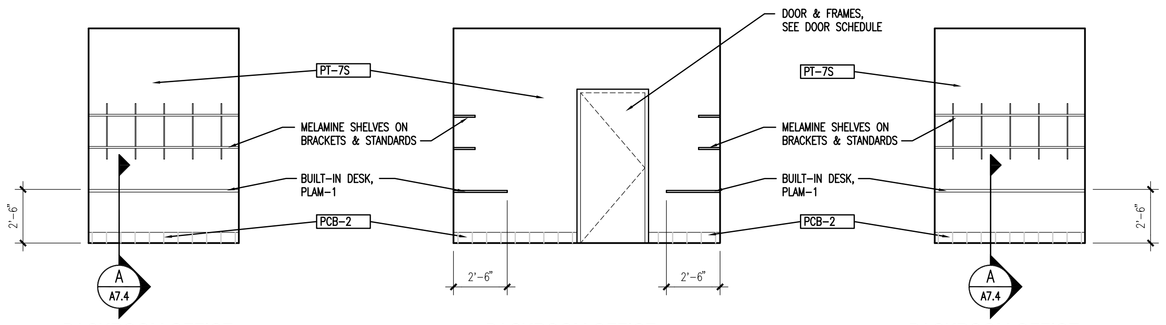

N A6.1 BACKROOM OFFICE INTERIOR ELEVATION SCALE: 1/4" = 1'-0"

P A6.1 BACKROOM OFFICE INTERIOR ELEVATION SCALE: 1/4" = 1'-0"

Q A6.1 BACKROOM OFFICE INTERIOR ELEVATION SCALE: 1/4" = 1'-0"

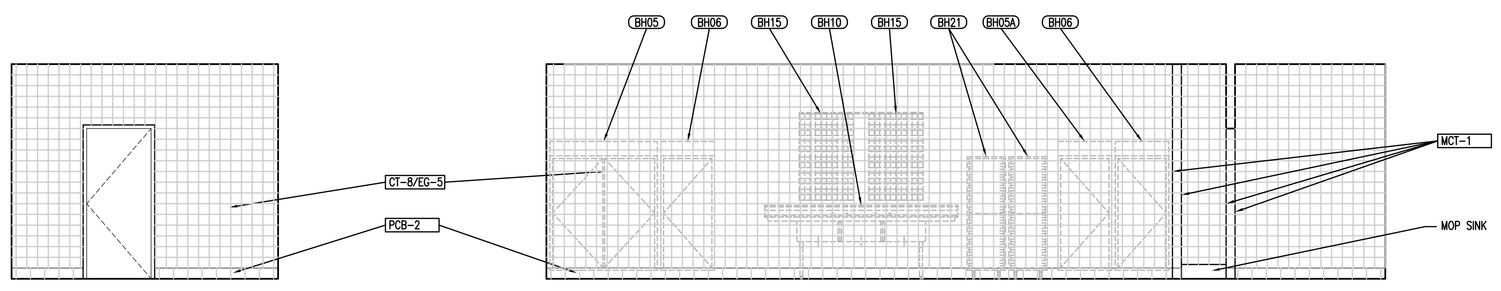

R A6.1 BACKROOM SUPPORT INTERIOR ELEVATION SCALE: 1/4" = 1'-0"

S A6.1 BACKROOM SUPPORT INTERIOR ELEVATION SCALE: 1/4" = 1'-0"

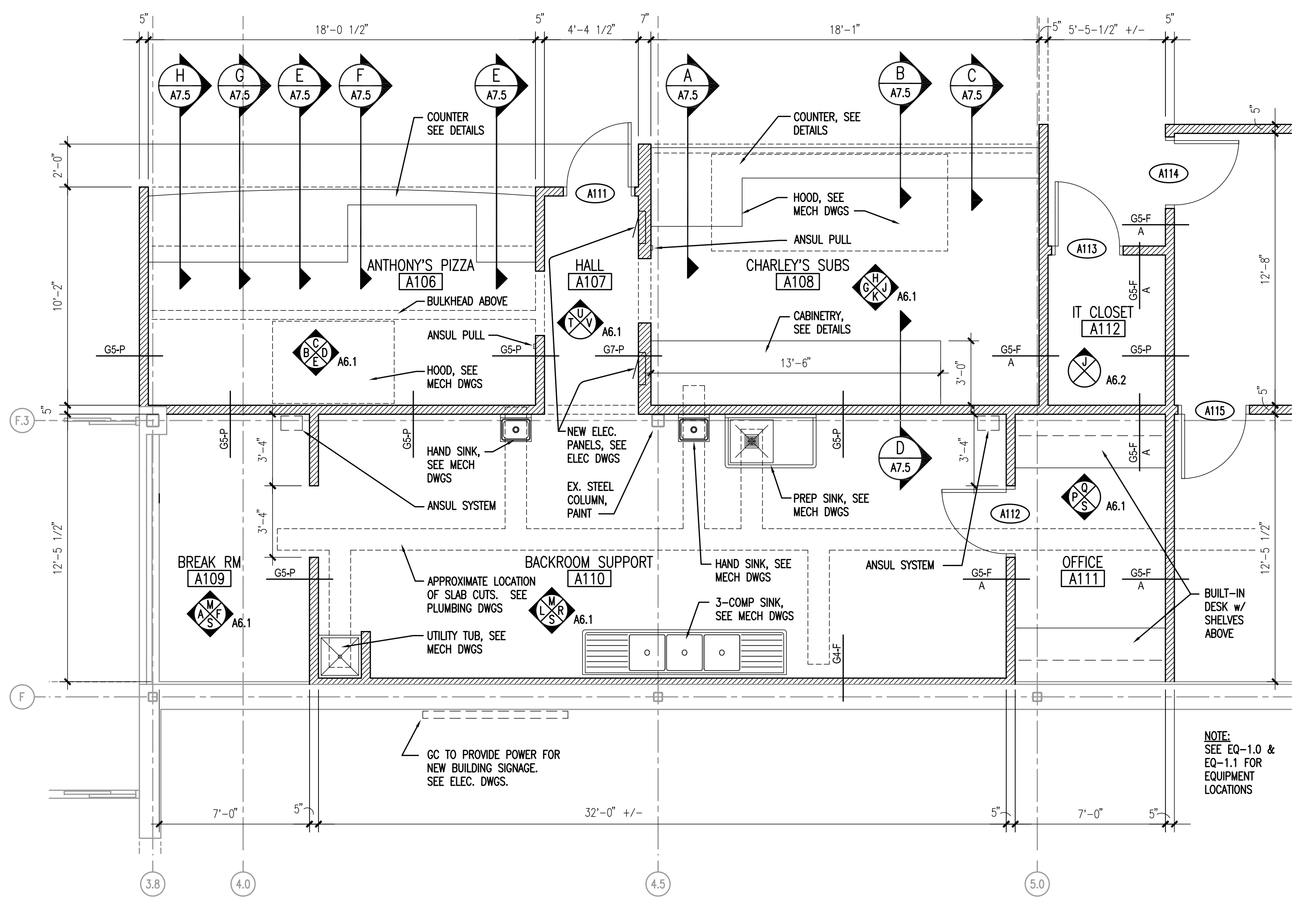

1 A6.1 ENLARGED PLAN SCALE: 1/4" = 1'-0"

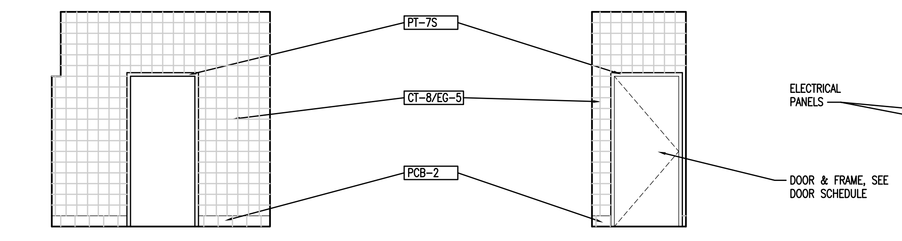

T A6.1 HALL INTERIOR ELEVATION SCALE: 1/4" = 1'-0"

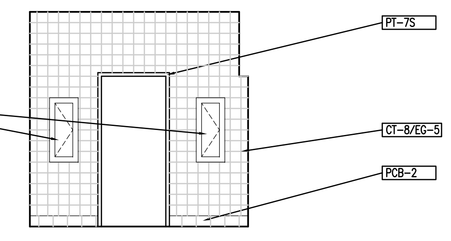

U A6.1 HALL INTERIOR ELEVATION SCALE: 1/4" = 1'-0"

V A6.1 HALL INTERIOR ELEVATION SCALE: 1/4" = 1'-0"

DATES AND REVISIONS

No.	Date/Description
	04.11.12 – BID

EXCHANGE™

RICHARD L. BOWEN + ASSOCIATES INC.
ARCHITECTS • ENGINEERS • MANAGERS • CONSTRUCTION
13000 Shaker Boulevard / Cleveland, Ohio 44120
Phone: (216) 491-93000 Fax: (216) 491-8053
www.rlba.com - email@rlba.com

FT. MYER EXCHANGE
JBMHH - MYER
ARLINGTON, VIRGINIA

ENLARGED ANTHONY'S PIZZA, CHARLEY'S SUBS, & BACK OF HOUSE

DRAWN BY: RTV
CHECKED BY: --
RLB NO.: 7800.02

DRAWING NO.
A6.1

P:\7800\7800.02 FT. MYER PX IMAGE UPGRADE CONST. CONTRACT DOCS\ARCH\780002_A06-01.DWG | PLOTTED 04.09.2012 09:36AM BY ANDREW HENLEY

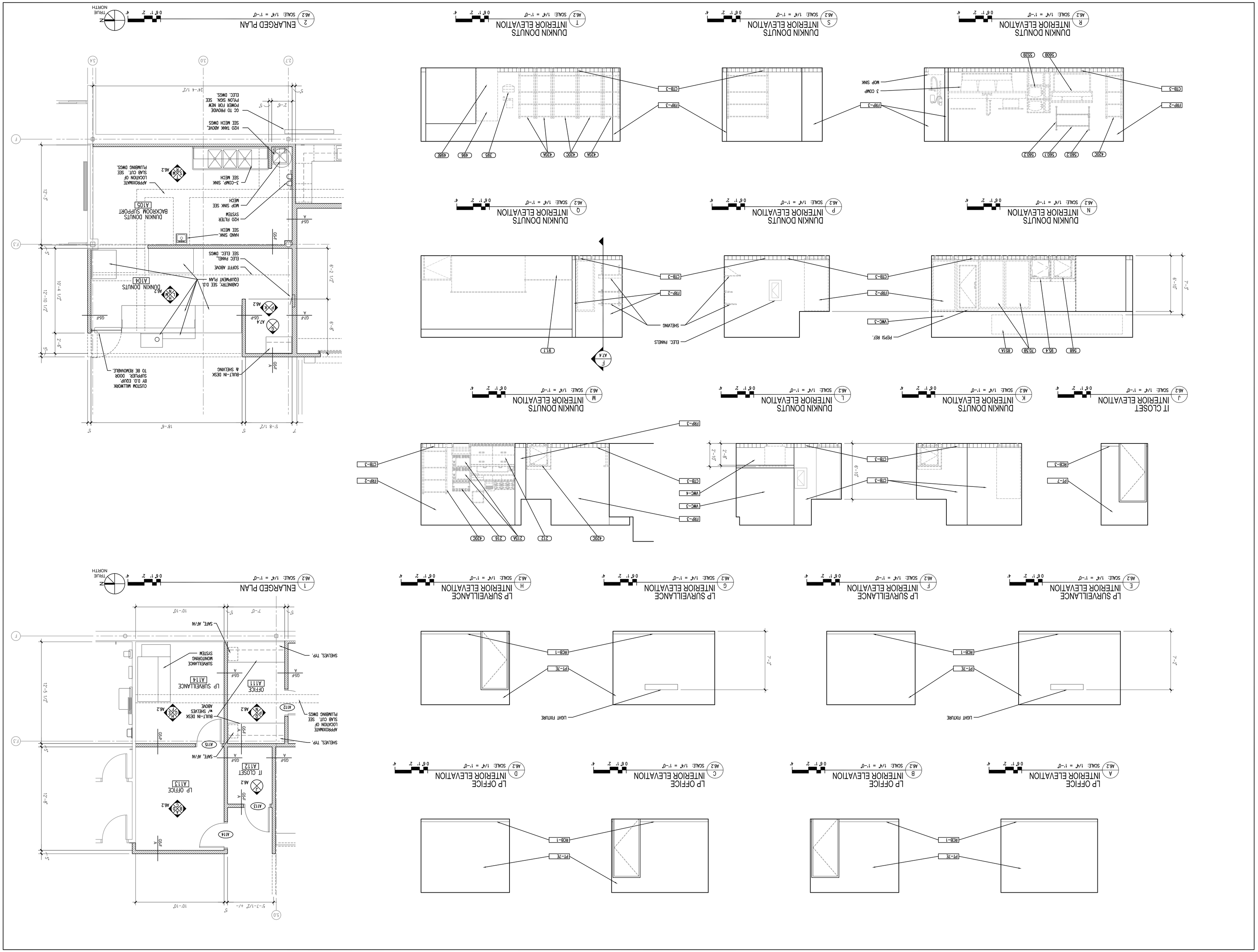

FT. MYER EXCHANGE

JBMHH - MYER
ARLINGTON, VIRGINIA

ENLARGED DUNKIN DONUTS & LP OFFICES

RICHARD L. BOWEN + ASSOCIATES INC.
13000 Shaker Boulevard / Cleveland, Ohio 44120
Phone: (216) 491-8000 Fax: (216) 491-8003
www.rlba.com - email@rlba.com

CONSULTANTS • ARCHITECTS • ENGINEERS • MANAGERS

EXCHANGE™

DATES AND REVISIONS

No.	Date/Description
	06.11.12 - BID

DRAWN BY: RIV
CHECKED BY: --
RLB NO.: 7800.02

DRAWING NO. A6.2

P:\7800\7800.02 FT. MYER PX IMAGE UPGRADE CONST. CONTRACT DOCS\ARCH\7800002_A06-02.DWG | PLOTTED 04.09.2012 09:37AM BY ANDREW HENLEY

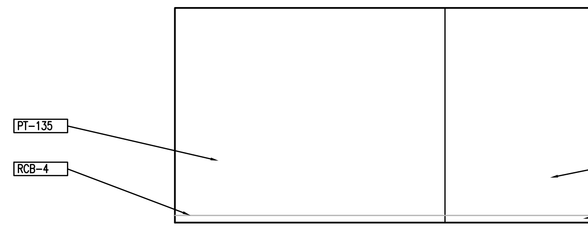

A A6.3 BARBER SHOP INTERIOR ELEVATION
SCALE: 1/4" = 1'-0"

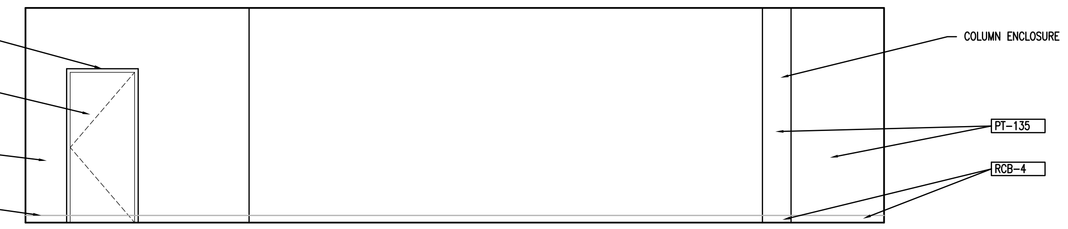

B A6.3 BARBER SHOP INTERIOR ELEVATION
SCALE: 1/4" = 1'-0"

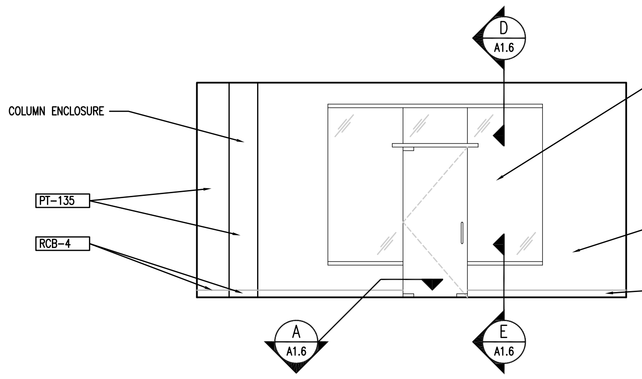

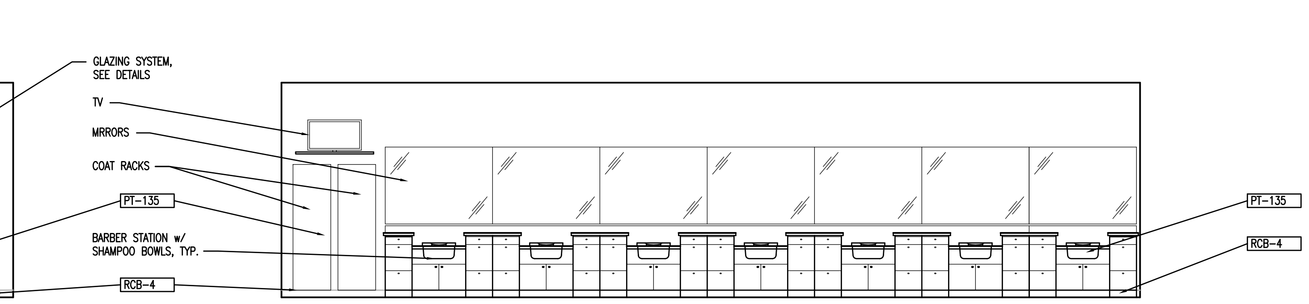

C A6.3 BARBER SHOP INTERIOR ELEVATION
SCALE: 1/4" = 1'-0"

D A6.3 BARBER SHOP INTERIOR ELEVATION
SCALE: 1/4" = 1'-0"

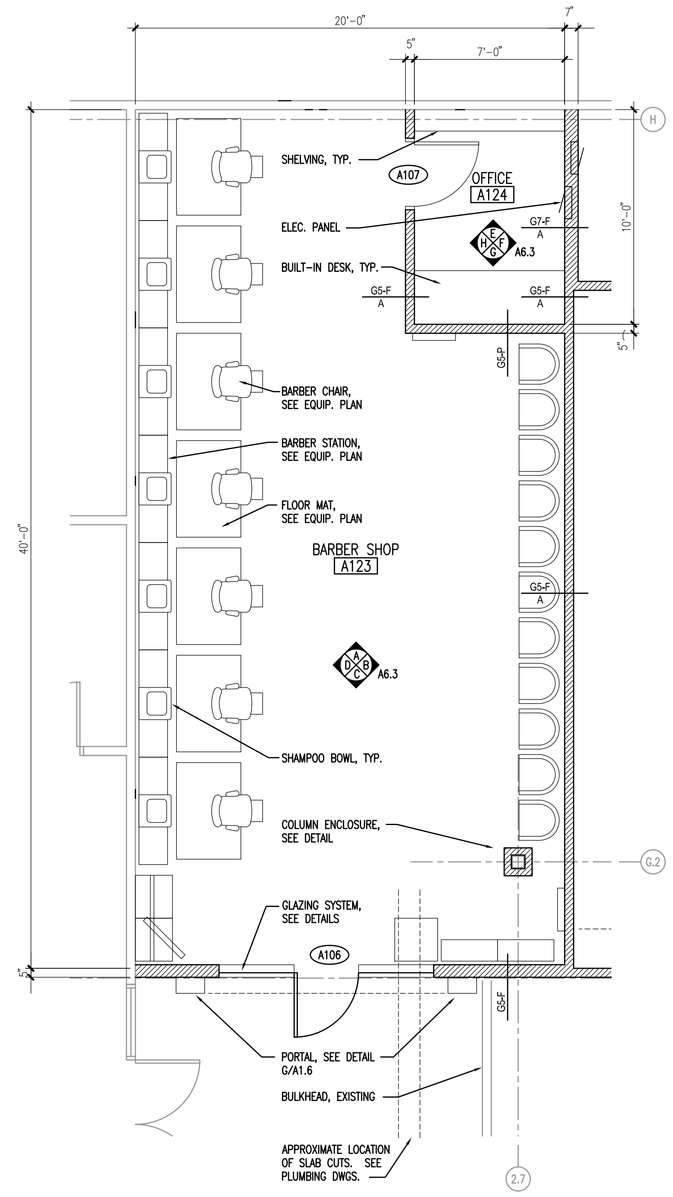

1 A6.3 BARBER SHOP: ENLARGED PLAN
SCALE: 1/4" = 1'-0"

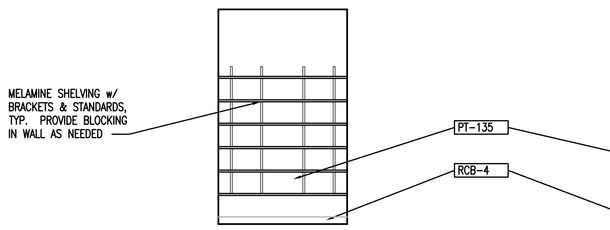

E A6.3 OFFICE INTERIOR ELEVATION
SCALE: 1/4" = 1'-0"

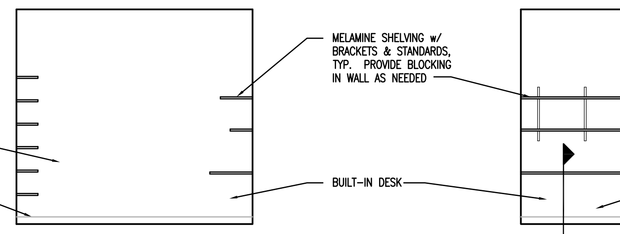

F A6.3 OFFICE INTERIOR ELEVATION
SCALE: 1/4" = 1'-0"

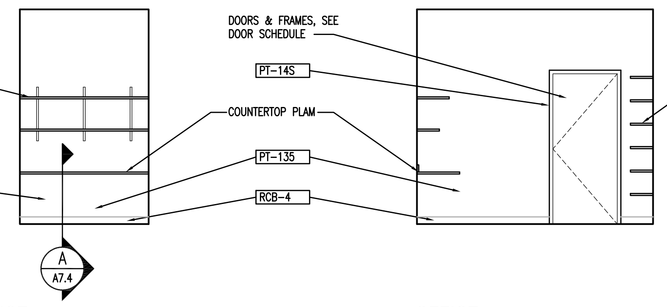

G A6.3 OFFICE INTERIOR ELEVATION
SCALE: 1/4" = 1'-0"

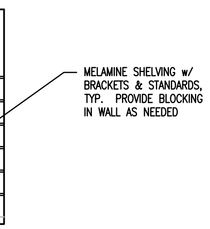

H A6.3 OFFICE INTERIOR ELEVATION
SCALE: 1/4" = 1'-0"

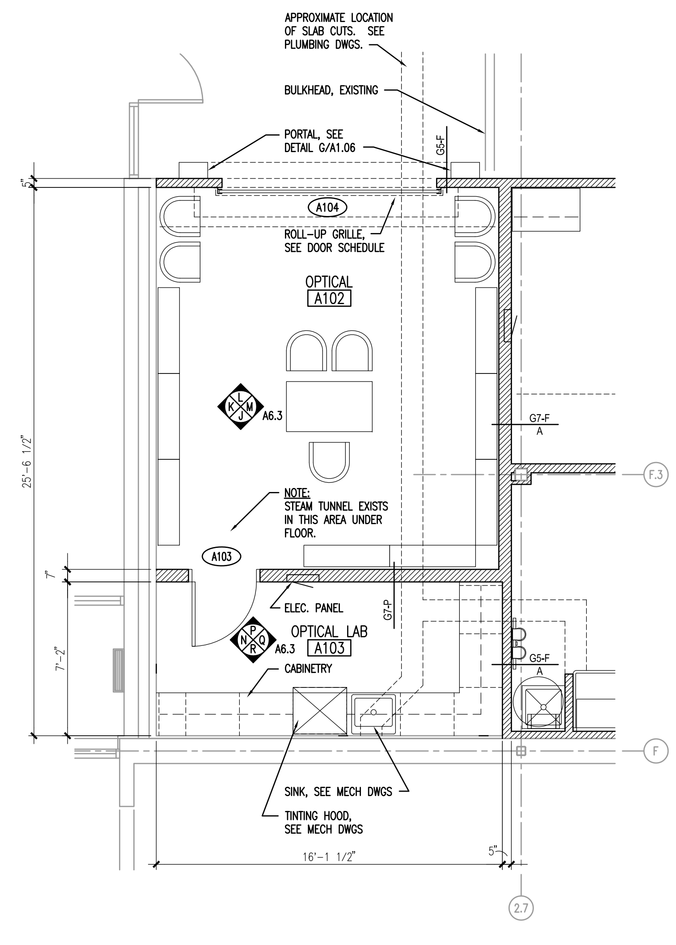

2 A6.3 OPTICAL: ENLARGED PLAN
SCALE: 1/4" = 1'-0"

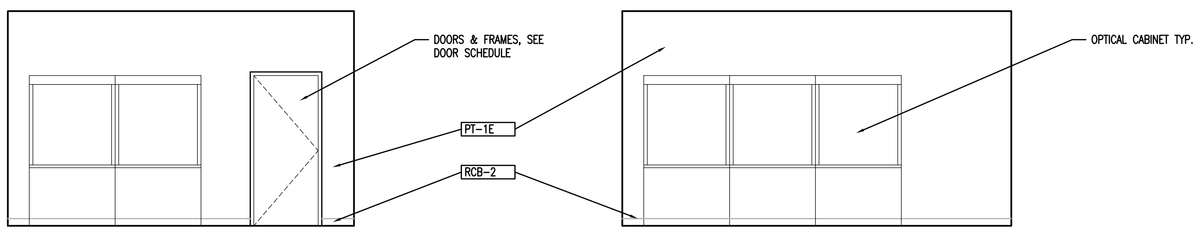

J A6.3 OPTICAL INTERIOR ELEVATION
SCALE: 1/4" = 1'-0"

K A6.3 OPTICAL INTERIOR ELEVATION
SCALE: 1/4" = 1'-0"

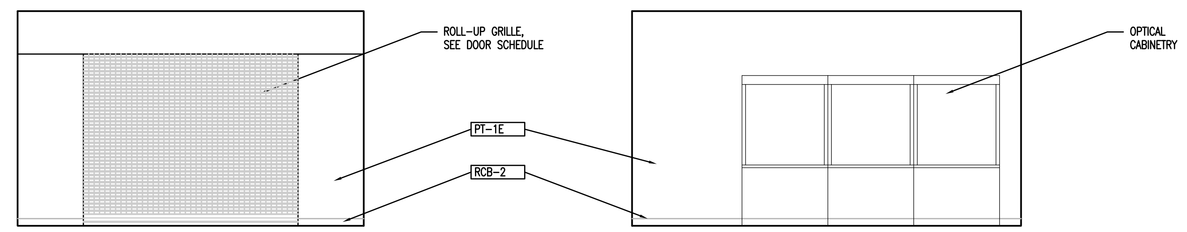

L A6.3 OPTICAL INTERIOR ELEVATION
SCALE: 1/4" = 1'-0"

M A6.3 OPTICAL INTERIOR ELEVATION
SCALE: 1/4" = 1'-0"

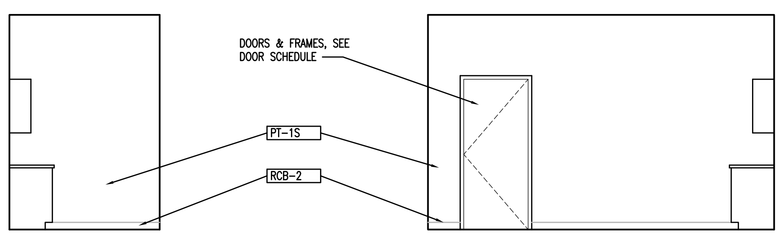

N A6.3 OPTICAL LAB INTERIOR ELEVATION
SCALE: 1/4" = 1'-0"

P A6.3 OPTICAL LAB INTERIOR ELEVATION
SCALE: 1/4" = 1'-0"

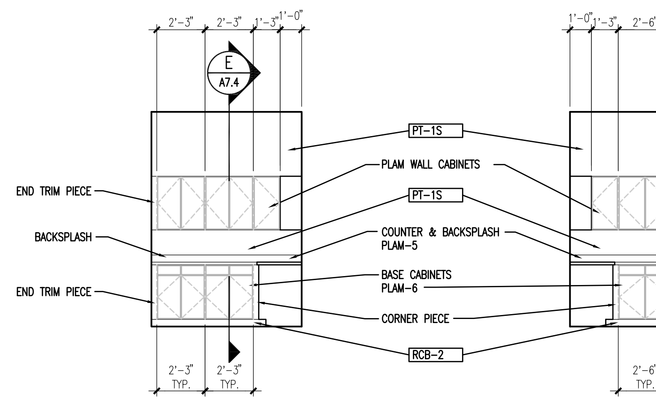

Q A6.3 OPTICAL LAB INTERIOR ELEVATION
SCALE: 1/4" = 1'-0"

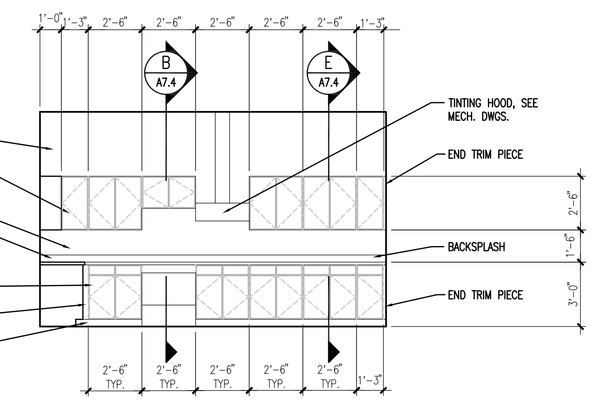

R A6.3 OPTICAL LAB INTERIOR ELEVATION
SCALE: 1/4" = 1'-0"

DATES AND REVISIONS

No.	Date/Description
	04.11.12 – BID

EXCHANGE™

RICHARD L. BOWEN + ASSOCIATES INC.
13000 Shaker Boulevard | Cleveland, Ohio 44120
Phone: (216) 491-5300 Fax: (216) 491-8053
www.rlba.com - email@rlba.com

FT. MYER EXCHANGE
JBMHH - MYER
ARLINGTON, VIRGINIA
ENLARGED BARBER SHOP
ENLARGED OPTICAL

DRAWN BY: RTV
CHECKED BY: --
RLB NO.: 7800.02

DRAWING NO.
A6.3

P:\7800\7800.02 FT. MYER PX IMAGE UPGRADE CONST. CONTRACT DOCS\ARCH\780002_A06-03.DWG | PLOTTED 04.09.2012 09:39AM BY ANDREW HENLEY

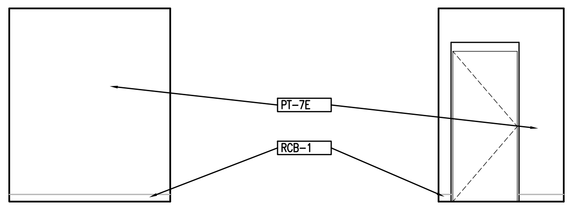

A A6.4 EMPLOYEE VESTIBULE INTERIOR ELEVATION
SCALE: 1/4" = 1'-0"

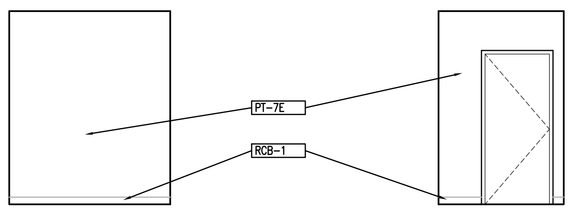

B A6.4 EMPLOYEE VESTIBULE INTERIOR ELEVATION
SCALE: 1/4" = 1'-0"

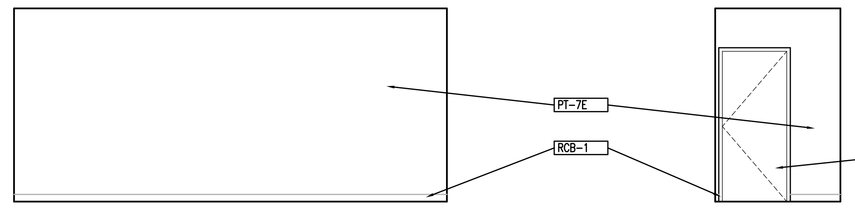

C A6.4 HALL #1 INTERIOR ELEVATION
SCALE: 1/4" = 1'-0"

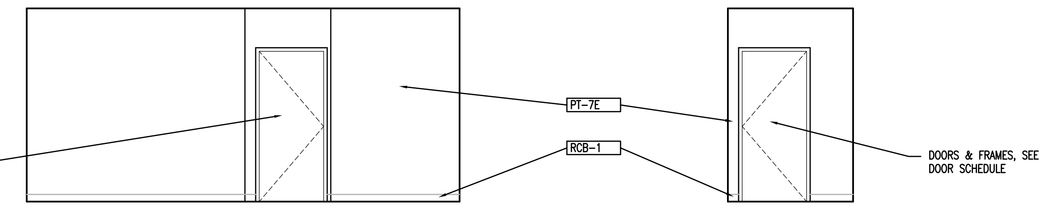

D A6.4 HALL #1 INTERIOR ELEVATION
SCALE: 1/4" = 1'-0"

E A6.4 HALL #1 INTERIOR ELEVATION
SCALE: 1/4" = 1'-0"

F A6.4 HALL #1 INTERIOR ELEVATION
SCALE: 1/4" = 1'-0"

G A6.4 EMPLOYEE VESTIBULE INTERIOR ELEVATION
SCALE: 1/4" = 1'-0"

H A6.4 EMPLOYEE VESTIBULE INTERIOR ELEVATION
SCALE: 1/4" = 1'-0"

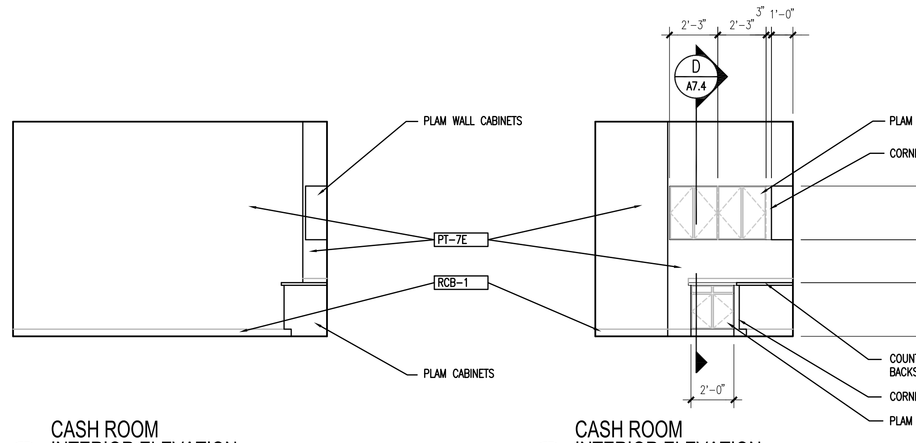

J A6.4 CASH ROOM INTERIOR ELEVATION
SCALE: 1/4" = 1'-0"

K A6.4 CASH ROOM INTERIOR ELEVATION
SCALE: 1/4" = 1'-0"

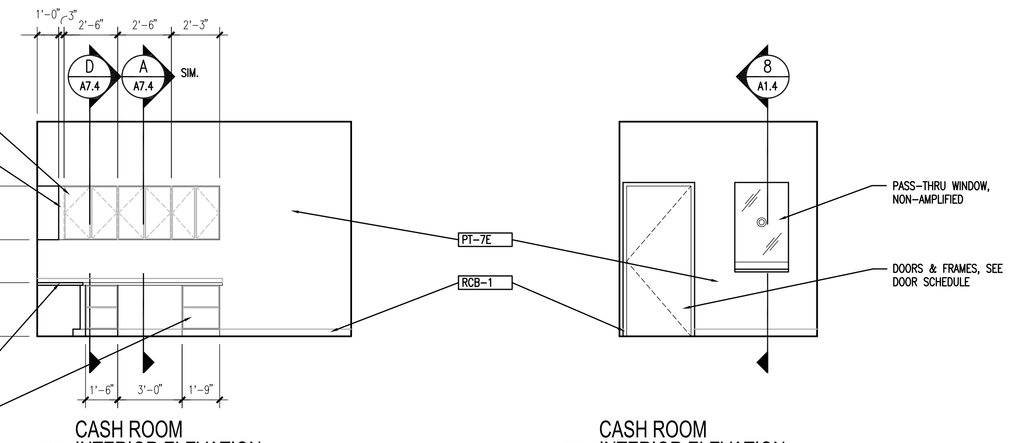

L A6.4 CASH ROOM INTERIOR ELEVATION
SCALE: 1/4" = 1'-0"

M A6.4 CASH ROOM INTERIOR ELEVATION
SCALE: 1/4" = 1'-0"

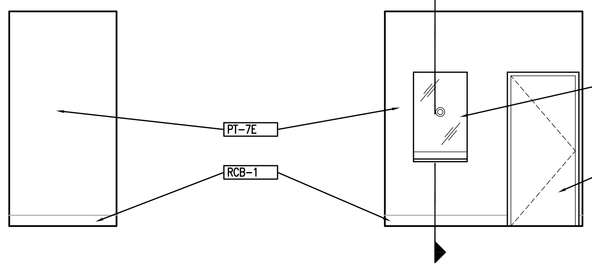

N A6.4 CASH DROP INTERIOR ELEVATION
SCALE: 1/4" = 1'-0"

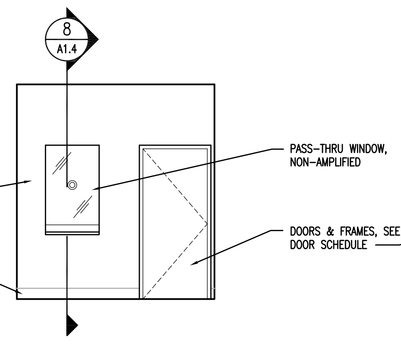

P A6.4 CASH DROP INTERIOR ELEVATION
SCALE: 1/4" = 1'-0"

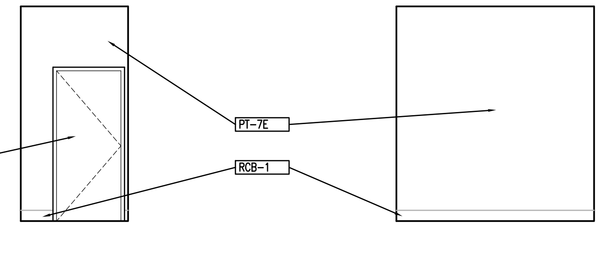

Q A6.4 CASH DROP INTERIOR ELEVATION
SCALE: 1/4" = 1'-0"

R A6.4 CASH DROP INTERIOR ELEVATION
SCALE: 1/4" = 1'-0"

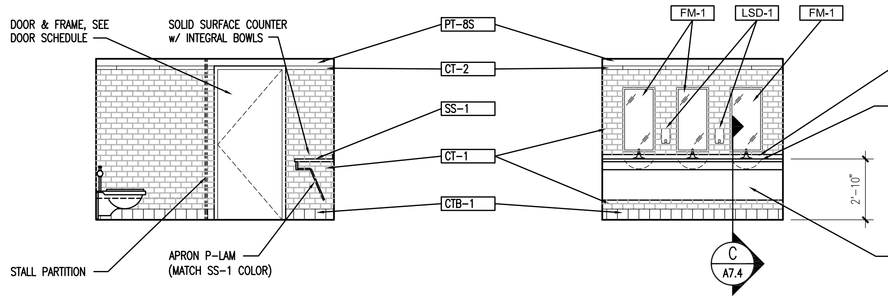

S A6.4 WOMENS RESTROOM INTERIOR ELEVATION
SCALE: 1/4" = 1'-0"

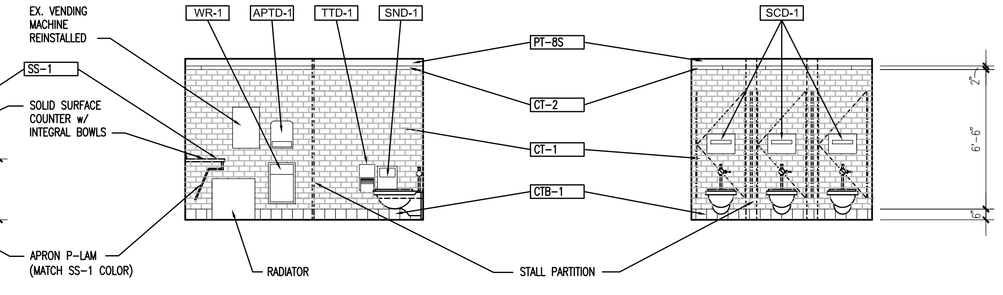

T A6.4 WOMENS RESTROOM INTERIOR ELEVATION
SCALE: 1/4" = 1'-0"

U A6.4 WOMENS RESTROOM INTERIOR ELEVATION
SCALE: 1/4" = 1'-0"

V A6.4 WOMENS RESTROOM INTERIOR ELEVATION
SCALE: 1/4" = 1'-0"

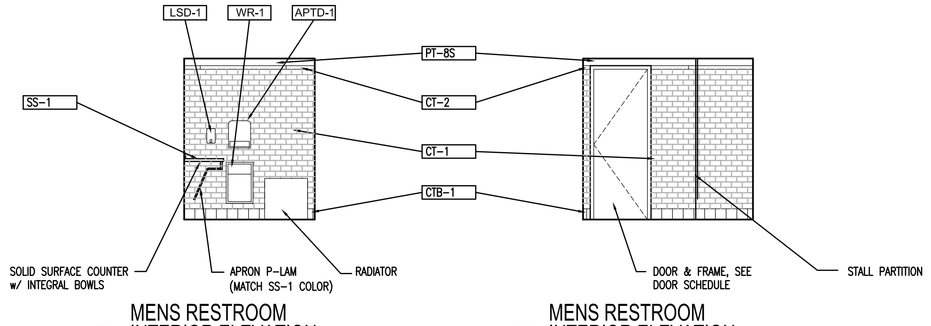

W A6.4 MENS RESTROOM INTERIOR ELEVATION
SCALE: 1/4" = 1'-0"

X A6.4 MENS RESTROOM INTERIOR ELEVATION
SCALE: 1/4" = 1'-0"

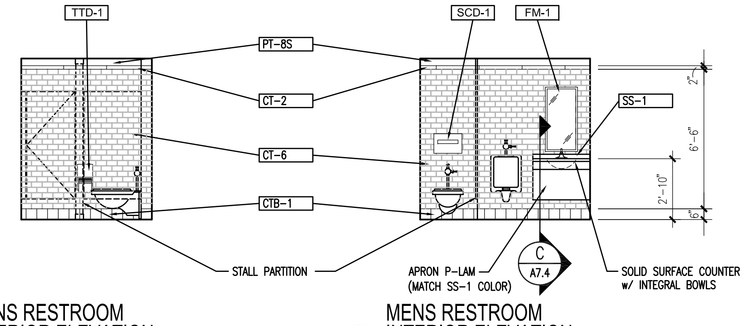

Y A6.4 MENS RESTROOM INTERIOR ELEVATION
SCALE: 1/4" = 1'-0"

Z A6.4 MENS RESTROOM INTERIOR ELEVATION
SCALE: 1/4" = 1'-0"

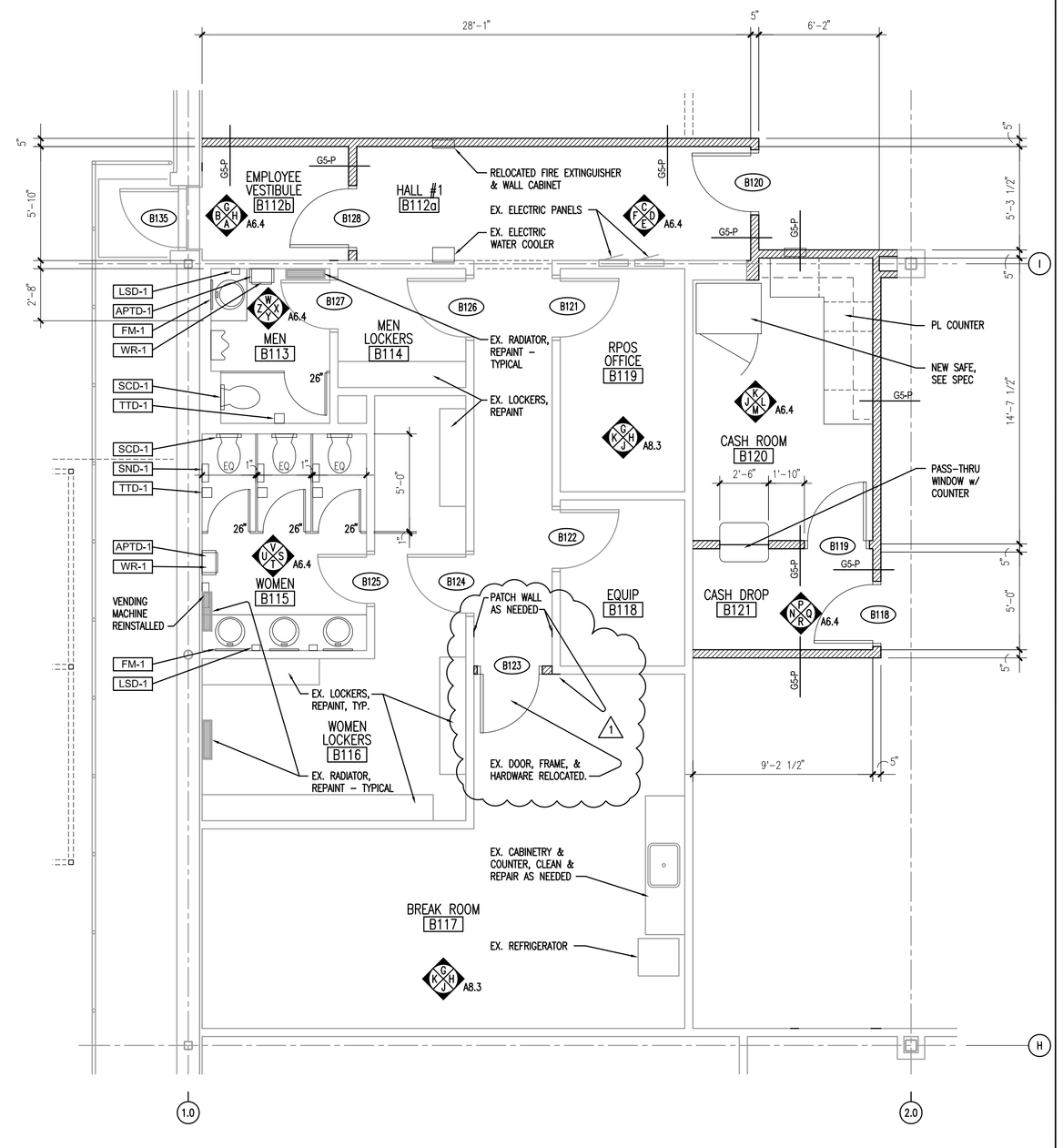

1 A6.4 ENLARGED EMPLOYEE AREA
SCALE: 1/4" = 1'-0"

TRUE NORTH

DATES AND REVISIONS	
No.	Date/Description
	04.11.12 – BID

EXCHANGE™

RICHARD L. BOWEN + ASSOCIATES INC.
ARCHITECTS • ENGINEERS • CONSTRUCTION MANAGERS
13000 Shaker Boulevard / Cleveland, Ohio 44120
Phone: (216) 491-9300 Fax: (216) 491-8053
www.rlba.com - email@rlba.com

FT. MYER EXCHANGE
JBMHH - MYER
ARLINGTON, VIRGINIA

ENLARGED EMPLOYEE AREA

DRAWN BY: RTV
CHECKED BY: --
RLB NO.: 7800.02

DRAWING NO.
A6.4

P:\7800\7800.02 FT. MYER PX IMAGE UPGRADE CONST. CONTRACT DOCS\ARCH\780002_A06-04.DWG | PLOTTED 04-26-2012 03:18PM BY RYAN VANJO

A A6.5 ADMS HALL INTERIOR ELEVATION
SCALE: 1/4" = 1'-0"

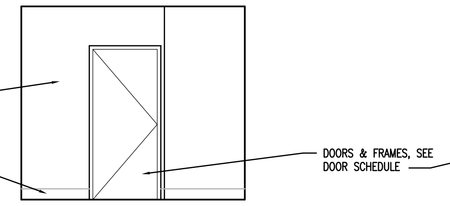

B A6.5 ADMS HALL INTERIOR ELEVATION
SCALE: 1/4" = 1'-0"

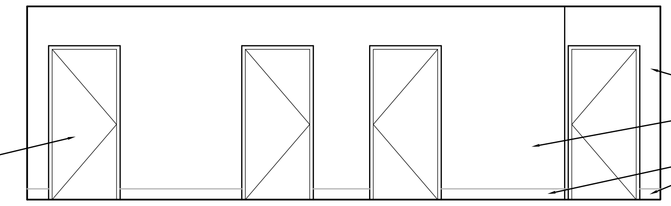

C A6.5 ADMS HALL INTERIOR ELEVATION
SCALE: 1/4" = 1'-0"

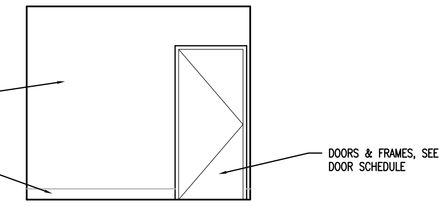

D A6.5 ADMS HALL INTERIOR ELEVATION
SCALE: 1/4" = 1'-0"

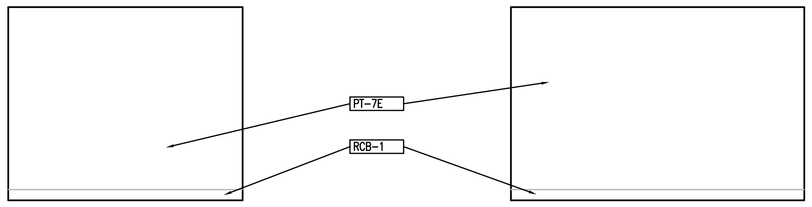

E A6.5 STORE MANAGER INTERIOR ELEVATION
SCALE: 1/4" = 1'-0"

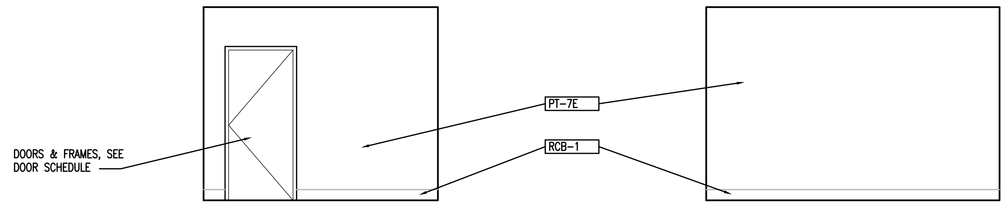

F A6.5 STORE MANAGER INTERIOR ELEVATION
SCALE: 1/4" = 1'-0"

G A6.5 STORE MANAGER INTERIOR ELEVATION
SCALE: 1/4" = 1'-0"

H A6.5 STORE MANAGER INTERIOR ELEVATION
SCALE: 1/4" = 1'-0"

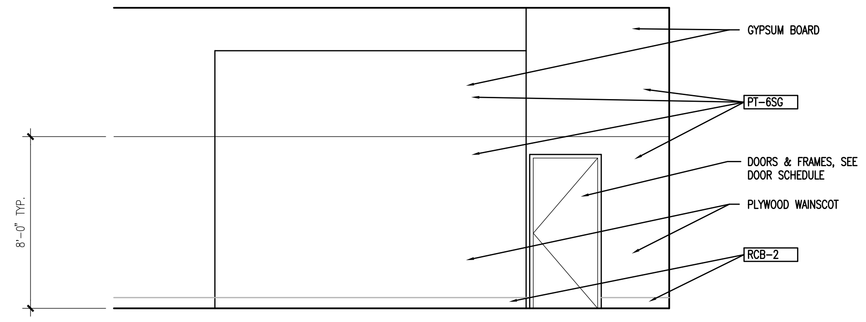

J A6.5 DOCK / MPA AREA INTERIOR ELEVATION
SCALE: 1/4" = 1'-0"

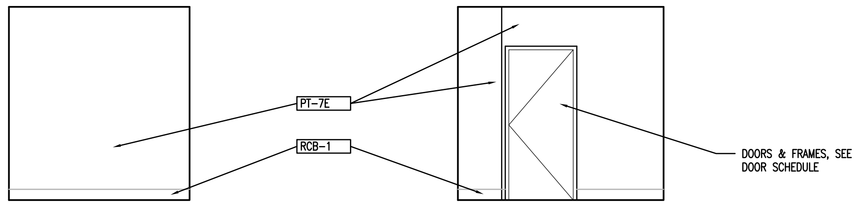

K A6.5 STOCK MANAGER INTERIOR ELEVATION
SCALE: 1/4" = 1'-0"

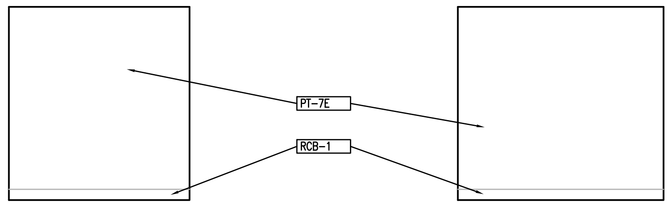

L A6.5 STOCK MANAGER INTERIOR ELEVATION
SCALE: 1/4" = 1'-0"

M A6.5 STOCK MANAGER INTERIOR ELEVATION
SCALE: 1/4" = 1'-0"

N A6.5 STOCK MANAGER INTERIOR ELEVATION
SCALE: 1/4" = 1'-0"

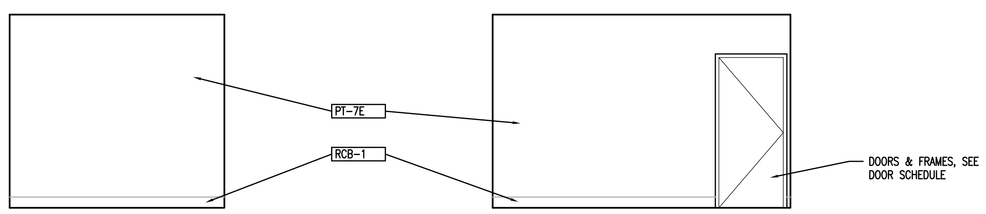

P A6.5 OPERATIONS MANAGER INTERIOR ELEVATION
SCALE: 1/4" = 1'-0"

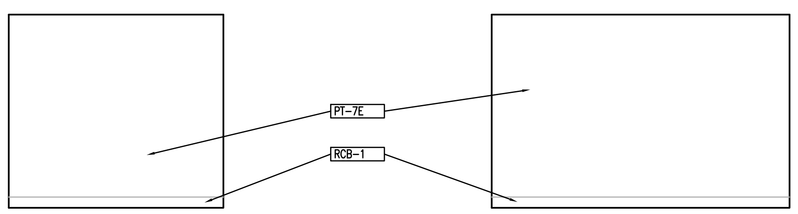

Q A6.5 OPERATIONS MANAGER INTERIOR ELEVATION
SCALE: 1/4" = 1'-0"

R A6.5 OPERATIONS MANAGER INTERIOR ELEVATION
SCALE: 1/4" = 1'-0"

S A6.5 OPERATIONS MANAGER INTERIOR ELEVATION
SCALE: 1/4" = 1'-0"

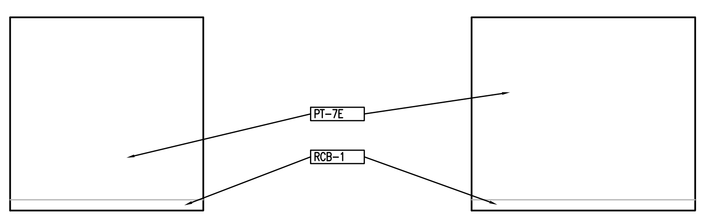

T A6.5 DEPT #2 MANAGER INTERIOR ELEVATION
SCALE: 1/4" = 1'-0"

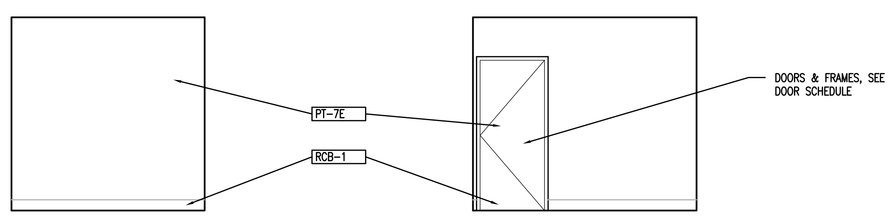

U A6.5 DEPT #2 MANAGER INTERIOR ELEVATION
SCALE: 1/4" = 1'-0"

V A6.5 DEPT #2 MANAGER INTERIOR ELEVATION
SCALE: 1/4" = 1'-0"

W A6.5 DEPT #2 MANAGER INTERIOR ELEVATION
SCALE: 1/4" = 1'-0"

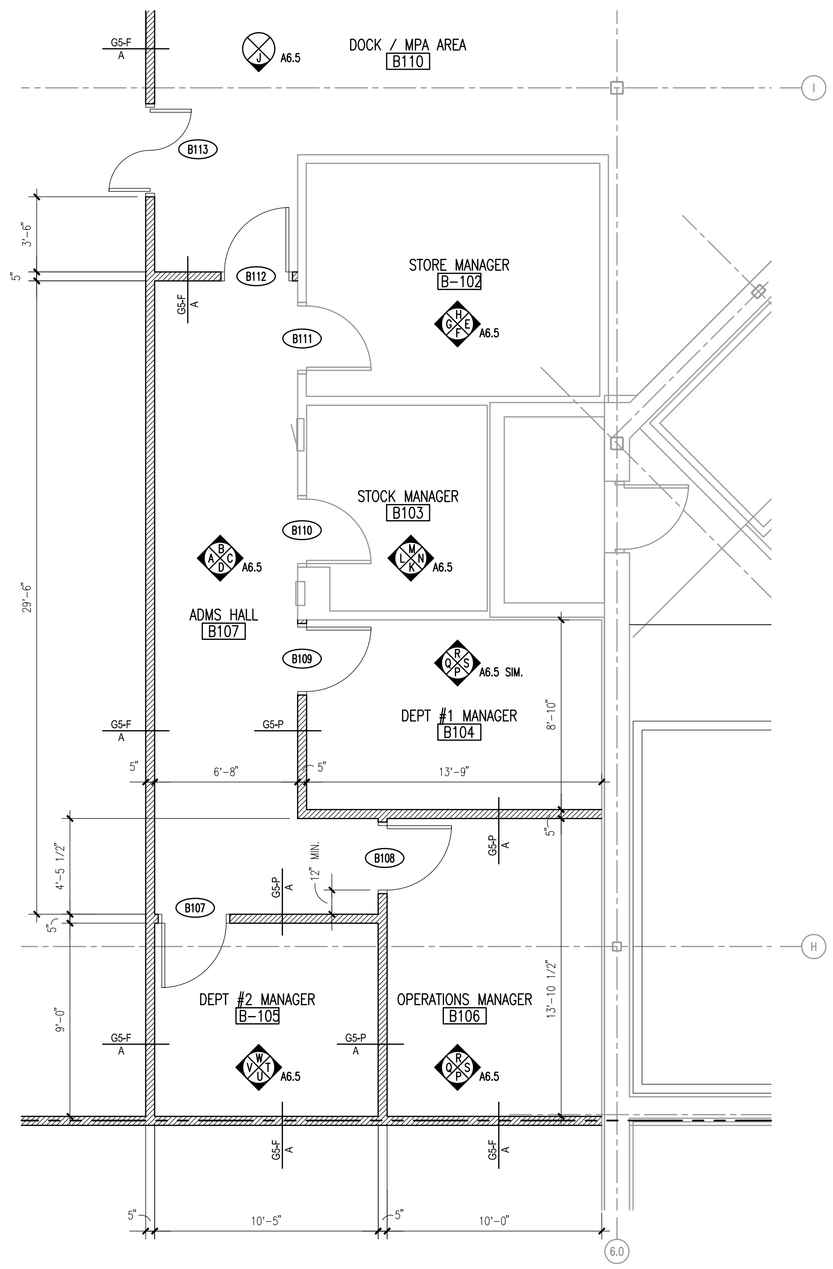

1 A6.5 ENLARGED PLAN
SCALE: 1/4" = 1'-0"

DATES AND REVISIONS	
No.	Date/Description
	04.11.12 – BID

EXCHANGE™

RICHARD L. BOWEN + ASSOCIATES INC.
ARCHITECTS • ENGINEERS • MANAGERS • CONSTRUCTION
13000 Shaker Boulevard / Cleveland, Ohio 44120
Phone: (216) 491-9300 Fax: (216) 491-8053
www.rlba.com • email@rlba.com

FT. MYER EXCHANGE
JBMHH - MYER
ARLINGTON, VIRGINIA

ENLARGED ADMINISTRATIVE OFFICES

DRAWN BY: RTV
CHECKED BY: --
RLB NO.: 7800.02

DRAWING NO.
A6.5

P:\7800\7800.02 FT. MYER PX IMAGE UPGRADE CONST. CONTRACT DOCS\ARCH\780002_A06-05.DWG | PLOTTED 04.09.2012 09:38AM BY ANDREW HENLEY

DATES AND REVISIONS		
No.	Date/Description	
	04.11.12 – BID	

EXCHANGE™

RICHARD L. BOWEN + ASSOCIATES INC.
13000 Shaker Boulevard / Cleveland, Ohio 44120
Phone: (216) 491-9300 Fax: (216) 491-8053
www.rlba.com - email@rlba.com

FT. MYER EXCHANGE

JBMHH - MYER
ARLINGTON, VIRGINIA

BID OPTION #2
MCSS OFFICE / BREAK RM & ALTERATONS

DRAWN BY: RV
CHECKED BY: --
RLB NO.: 7800.02
DRAWING NO. A6.6

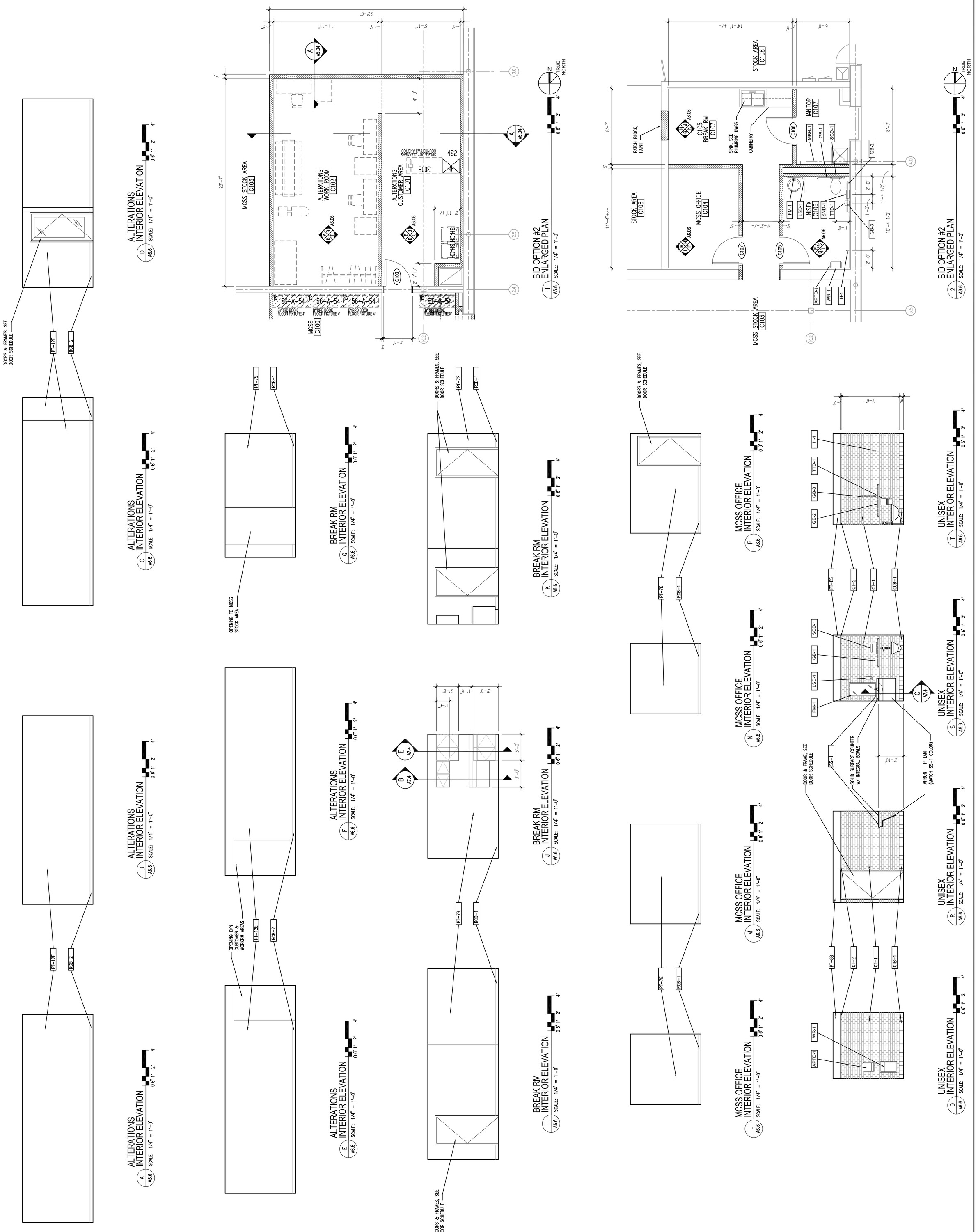

INTERIOR FINISH MATERIAL LIST

ITEMS FURNISHED / INSTALLED AS FOLLOWS:
A -- AAFES
C -- CONTRACTOR

ITEM NO.	ITEM DESCRIPTION	MANUFACTURER	PRODUCT NAME	PRODUCT NUMBER	COLOR	FURNISHED BY:	INSTALLED BY:	REMARKS
ACT-1	ACOUSTICAL CEILING TILES	USG INTERIORS	FISSURED 24" x 48" x 5/8" SQUARE EDGE	562	TILE - WHITE, GRID - WHITE	C	C	DONN DX GRID w/ 3/4" x 3/4" SHADOWLINE ANGLE @ PERIMETER
ACT-2	ACOUSTICAL CEILING TILES	USG INTERIORS	FISSURED 24" x 24" x 5/8" SQUARE EDGE	560	TILE - WHITE, GRID - WHITE	C	C	DONN DX GRID w/ 3/4" x 3/4" SHADOWLINE ANGLE @ PERIMETER
ACT-3	ACOUSTICAL CEILING TILES	USG INTERIORS	CLEAN ROOM CLIMA PLUS 24" x 24" x 5/8" SQUARE EDGE	56091	TILE - WHITE, GRID - WHITE	C	C	DONN DX GRID w/ 7/8" WALL ANGLE @ PERIMETER
ACT-4	ACOUSTICAL CEILING TILES	USG INTERIORS	CLEAN ROOM CLIMA PLUS 24" x 48" x 5/8" SQUARE EDGE		TILE - WHITE, GRID - WHITE			DONN DX GRID w/ 7/8" WALL ANGLE @ PERIMETER
CPT-1	CARPET	J & J INVISION	BROKEN SLATE, MODULAR CARPET TILE	7950M	324 BASALT	C	C	
CPT-2	CARPET	J & J INVISION	BROKEN SLATE, MODULAR CARPET TILE	7950M	338 PYRITE	C	C	
CT-1	CERAMIC TILE	DAL-TILE	3" X 6" SEMI GLOSS		K-175 BISCUIT	C	C	INSTALLED WITH OFFSET BRICK PATTERN TO 7'-0" AFF
CT-2	CERAMIC TILE TRIM PIECE	DAL-TILE	2" X 24" FABRIQUE	P690	GRIS LINEN	C	C	AT TOP OF BISCUIT WALL TILE
CT-3	CERAMIC TILE	DAL-TILE	6" X 6"	B911	LUMINARY GOLD	C	C	
CT-4	CERAMIC TILE	DAL-TILE	6" X 6"	B951	BERRY	C	C	
CT-5	CERAMIC TILE	DAL-TILE	20" X 20"	P526	COPPER	C	C	
CT-6								NOT USED.
CT-7	CERAMIC TILE	DAL-TILE	12"x12" PRE-POLISHED	N500		C	C	DUNKIN DONUT CODE # T-59, PUBLIC AREAS
CT-8	CERAMIC TILE	DAL-TILE	6"x6" SEMI GLOSS	0100	WHITE	C	C	
CTB-1	CERAMIC TILE BASE	DAL-TILE	6"X6" SEMI GLOSS	A-3601	K - 175 BISCUIT	C	C	COVE BASE
CTB-2	CERAMIC TILE BASE	DAL-TILE	6"X6" SEMI GLOSS	S-3619T	K - 175 BISCUIT	C	C	ROUND TOP
CTB-3	CERAMIC TILE BASE	DAL-TILE	***************	Q3565	SAHARA SAND	C	C	DUNKIN DONUT CODE # B-42, W/ T-58
EG-1	EPOXY GROUT	LATICRETE	EPOXY GROUT	78	STERLING SILVER	C	C	
EG-2	EPOXY GROUT	HYDROMENT	EPOXY GROUT	684	CHAR BLACK	C	C	FLOOR GROUT
EG-3	EPOXY GROUT	CUSTOM BUILDING PRODUCTS	EPOXY GROUT	22	SAHARA TAN	C	C	WALL GROUT
EG-4	EPOXY GROUT	CUSTOM BUILDING PRODUCTS	EPOXY GROUT	384	CAMEL	C	C	USE WITH CT-5
EG-5	EPOXY GROUT	CUSTOM BUILDING PRODUCTS	EPOXY GROUT	382	BONE	C	C	
EM-1	ENTRY MAT	PAWLING CORP.	ROL-DEK SERIES	EM-800-	CHARCOAL GRAY	C	C	
FRP-1	FIBER REINFORCED PANELS	MARLITE	3"x6" SYMMETRIX	C100G63	WHITE	C	C	ANTHONY'S, SCORED CUSTOM SIZE
FRP-2	FIBER REINFORCED PANELS	MARLITE	4"x4" SYMMETRIX	C118-G44	ALMOND	C	C	DUNKIN DONUTS CODE # FRP-33
FRP-3	FIBER REINFORCED PANELS	MARLITE		P-100	WHITE	C	C	DUNKIN DONUTS CODE # FRP-22
G-1	GROUT	CUSTOM BUILDING PRODUCTS	GROUT		"COCOA PRISM SANDED"	C	C	DUNKIN DONUTS CODE #G-32
MBR-1	METAL BUMPER RAIL	C/S ACROVYN	5-9/16"x1-9/16" METAL CRASH RAIL	SCR-16SSV		C	C	
MCT-1	METAL CORNER TRIM	GENOTEK	ALUMINUM CORNER TRIM	855	ALUMINUM	C	C	MILL EXTRUDED FINISH
MTL-1	METAL WALL PANELS	MOZ DESIGNS	RADIANCE COLLECTION, FOG PATTERN		ELECTRIC RED	C	C	STOREFRONT PORTAL SYSTEM
MUR-1	WALL MURAL	OMNOVA	RECORE RV04			C	C	SIDE WALL MURAL AF/CI, LEVEL 5 WALL PREP
QT-1	CERAMIC TILE	DAL-TILE	6"x6" QUARRY TILE		SAHARA SAND	C	C	DUNKIN DONUTS CODE # T-58
PCB-1	PORCELAIN TILE BASE	CROSSVILLE	8"x8", COVE BASE	A790	BURGUNDY SMOKE	C	C	ANTHONY'S, CROSS COLORS, COVE BASE
PCB-2	PORCELAIN TILE BASE	CROSSVILLE	6"x8", COVE BASE	A790	BURGUNDY SMOKE	C	C	
PCT-1	PORCELAIN TILE	DAL-TILE	12"x12" FABRIQUE	P690	GRIS LINEN	C	C	
PCT-2	PORCELAIN TILE	CROSSVILLE	8"x8", CROSS DOT TEXTURE	A790	BURGUNDY SMOKE	C	C	CROSS COLORS
PLAM-1	PLASTIC LAMINATE	WILSONART	LAMINATE, MATTE FINISH	4142-60	GREY GLACE	C	C	
PLAM-2	PLASTIC LAMINATE	WILSONART	LAMINATE, MATTE FINISH	D381-60	FASHION GREY	C	C	
PLAM-3	PLASTIC LAMINATE	NEVAMAR	LAMINATE,TEXTURED FINISH	S1027T	LIBERTY RED	C	C	ANTHONY'S, SERVER COUNTER
PLAM-4	PLASTIC LAMINATE	FORMICA	LAMINATE, ARTISAN FINISH	1150-43	VOSAGES PEAR	C	C	ANTHONY'S
PLAM-5	PLASTIC LAMINATE	FORMICA	LAMINATE, MATTE FINISH	7697-58	BISQUE CERAMIC	C	C	COUNTERTOP & BACKSPLASH
PLAM-6	PLASTIC LAMINATE	FORMICA	LAMINATE, ARTISAN FINISH	7008-43	ACAJOUR MAHOGANY	C	C	BASE & UPPER CABINETS
PT-1	PAINT	SHERWIN WILLIAMS	HARMONY - INTERIOR ACRYLIC LATEX	SW7005	PURE WHITE	C	C	
PT-2	PAINT	SHERWIN WILLIAMS	HARMONY - INTERIOR ACRYLIC LATEX	SW6236	GRAYS HARBOR	C	C	
PT-3	PAINT	SHERWIN WILLIAMS	HARMONY - INTERIOR ACRYLIC LATEX	SW6378	CRISP LINEN	C	C	
PT-4	PAINT	SHERWIN WILLIAMS	HARMONY - INTERIOR ACRYLIC LATEX	SW6378	CRISP LINEN	C	C	
PT-5	PAINT	SHERWIN WILLIAMS	HARMONY - INTERIOR ACRYLIC LATEX	SW6107	NOMADIC DESERT	C	C	
PT-6	PAINT	SHERWIN WILLIAMS	HARMONY - INTERIOR ACRYLIC LATEX	SW7006	EXTRA WHITE	C	C	
PT-7	PAINT	SHERWIN WILLIAMS	HARMONY - INTERIOR ACRYLIC LATEX	SW6106	KILIM BEIGE	C	C	
PT-8	PAINT	SHERWIN WILLIAMS	HARMONY - INTERIOR ACRYLIC LATEX	SW7043	WORLDLY GRAY	C	C	
PT-9	PAINT	SHERWIN WILLIAMS	HARMONY - INTERIOR ACRYLIC LATEX	SW6454	SHAMROCK	C	C	WOOD TRIM ON MENU BOARD SOFFIT
PT-10	PAINT	GLIDDEN	************************	70YY/83/037	WEDDING WHITE	C	C	SEMI-GLOSS
PT-11	PAINT	SHERWIN WILLIAMS	HARMONY - INTERIOR ACRYLIC LATEX	SW6069	FRENCH ROAST	C	C	DUNKIN DONUTS CODE# P-69 ALT. DOOR FRAME
PT-12	PAINT	SHERWIN WILLIAMS	HARMONY - INTERIOR ACRYLIC LATEX	SW6077	EVERDAY WHITE	C	C	
PT-13	PAINT	SHERWIN WILLIAMS	HARMONY - INTERIOR ACRYLIC LATEX	SW6371	VANILLIN	C	C	
PT-14	PAINT	SHERWIN WILLIAMS	HARMONY - INTERIOR ACRYLIC LATEX	SW6681	BUTTER UP	C	C	
PT-15	PAINT	SHERWIN WILLIAMS	HARMONY - INTERIOR ACRYLIC LATEX	SW6700	DAY BREAK	C	C	
PT-16	PAINT	SHERWIN WILLIAMS	HARMONY - INTERIOR ACRYLIC LATEX	SW6421	CELERY	C	C	
PT-17	PAINT	SHERWIN WILLIAMS	HARMONY - INTERIOR ACRYLIC LATEX	SEE REMARK	ORANGE JUICE	C	C	MATCH BENJAMIN MOORE 2017-10
PT-18	PAINT	SHERWIN WILLIAMS	HARMONY - INTERIOR ACRYLIC LATEX	SW6258	TRICORN BLACK	C	C	
PT-19	PAINT	SHERWIN WILLIAMS	HARMONY - INTERIOR ACRYLIC LATEX	SW6909	LEMON TWIST	C	C	
PT-20	PAINT	SHERWIN WILLIAMS	HARMONY - INTERIOR ACRYLIC LATEX	SW6966	BLUE BLOOD	C	C	
RCB-1	RUBBER COVE BASE	JOHNSONITE	4" HIGH BASE	179	STEEL	C	C	
RCB-2	RUBBER COVE BASE	JOHNSONITE	4" HIGH BASE	48	GRAY	C	C	
RCB-3	RUBBER COVE BASE	JOHNSONITE	6" HIGH BASE	179	STEEL	C	C	
RCB-4	RUBBER COVE BASE	JOHNSONITE	4" HIGH BASE	29	MOONROCK	C	C	
RCB-5	RUBBER COVE BASE	ARMSTRONG	4" HIGH BASE	619	LIGHT GRAY	C	C	
RS-1	RUBBER TRANSITION STRIP	JOHNSONITE	CTA-29-J WHEELED TRAFFIC TRANSITION	29	MOONROCK	C	C	1/4" MATERIAL TO SUBFLOOR
RS-2	RUBBER TRANSITION STRIP	JOHNSONITE	CTA-29-H WHEELED TRAFFIC TRANSITION	29	MOONROCK	C	C	1/4" MATERIAL TO 1/8" MATERIAL
RS-3	RUBBER TRANSITION STRIP	JOHNSONITE	SSR-29-B REDUCER	29	MOONROCK	C	C	1/8" OR 3/16" MATERIAL TO FLOOR, 35' ROLL
RT-1	RUBBER TILE	ATMOSPHERE	EARTHSHAPES - DISCOVERY	TM928	SIX DEGREES	C	C	4 mm STRAIGHT EDGE TILE
SPP-1	SOLID PLASTIC PARTITIONS	SCRANTON PRODUCTS			CLASSIC (ORANGE PEEL)/CHARCOAL GREY	C	C	FLOOR MOUNTED OVERHEAD BRACED
SS-1	ACRYLIC SOLID SURFACE	DUPONT CORIAN			SILT	C	C	
SS-2	SOLID SURFACE	ZODIAQ	GLOSS FINISH, PENCIL EDGE	QUARTZ	ARGO GREEN	C	C	
SS-3	SOLID SURFACE	FORMICA	TRADITIONS	324	BLACK MATRIX	C	C	
TS-1	METAL TRANSITION STRIP	SCHLUTER	RENO-U	AE	SATIN ALUMINUM	C	C	1/2" MATERIAL TO VINYL FLOORING
VCT-1	VINYL COMPOSITION TILES	ARMSTRONG	IMPERIAL TEXTURE, STANDARD EXCELON, 12"x12"	51861	SOFT WARM GRAY	C	C	
VCT-2	VINYL COMPOSITION TILES	ARMSTRONG	EXCELON STONETEX, 12"x12"	52161	CHARCOAL	C	C	
VCT-3	VINYL COMPOSITION TILES	ARMSTRONG	IMPERIAL TEXTURE, STANDARD EXCELON, 12"x12"	51929	SANDY BEACH	C	C	
VCT-4	VINYL COMPOSITION TILES	ARMSTRONG	IMPERIAL TEXTURE, STANDARD EXCELON, 12"x12"	51811	ANTIQUE WHITE	C	C	
VCT-5	VINYL COMPOSITION TILES	ARMSTRONG	IMPERIAL TEXTURE, STANDARD EXCELON, 12"x12"	51904	STERLING	C	C	
VPC-1	VINYL PANEL CEILING	ARMSTRONG	2'x4' VINYL CLAD	870		C	C	DUNKIN DONUTS. CODE # AC-22
VWC-1	VINYL WALL COVERING	SOURCE ONE	STICKS	2VAT-09	TAN	C	C	
VWC-2	VINYL WALL COVERING	LANARK			SISAL	C	C	LOOM - R2 - LM - 12
VWC-3	VINYL WALL COVERING	APA COLOR GRAPHICS			ORANGE JUMBLE	C	C	DUNKIN DONUTS CODE # WC-30S, BEHIND MENU BOARDS
VWG-1	VINYL WALL GRAPHICS					A	C	
VWG-2	VINYL WALL GRAPHICS	CUSTOM	CUSTOM	CUSTOM	28"x13" OVAL	A	C	AF/CI - FRONT COUNTER GRAPHICS ON STAINLESS STEEL PANEL
VWG-3	VINYL WALL GRAPHICS	CUSTOM	CUSTOM	CUSTOM		A	C	AF/CI SIDE WALLS OF METAL STOREFRONT PORTAL
VWG-4	VINYL WALL GRAPHICS	KOROSEAL DIGITAL PRODUCTS	CUSTOM	WC1DRJFD2822009	ABACO BEACH	A	C	AF/CI - FRONT MENU BOARD SOFFIT - KOROSEAL 330-664-2167
VWG-5	VINYL WALL GRAPHICS	DIGICO IMAGING			PHILLY CHEESESTEAK RIBBON	A	C	AF/CI - FRONT COUNTER GRAPHICS
VWG-6	VINYL WALL GRAPHICS					A	C	AF/CI - "BUBBLE" MURAL EDGE INSTALLED FULL WIDTH OF DRINK STATION FLOOR TO 12'-0" AFF (SAME AS ADJACENT VWC)
WT-1	WOOD TRIM					C	C	3/4" HARDWOOD TRIM PAINTED SHAMROCK, BOTTOM EDGE OF MENU BOARD SOFFIT

ROOM FINISH SCHEDULE

AREA	ROOM NO.	ROOM NAME	FLOOR MATERIAL	FLOOR FINISH	BASE	WEST MATERIAL	WEST FINISH	NORTH MATERIAL	NORTH FINISH	EAST MATERIAL	EAST FINISH	SOUTH MATERIAL	SOUTH FINISH	CEILING MATERIAL	CEILING FINISH	HEIGHT	REMARKS
AREA "A" ROOMS	A-100	MAIN ENTRY	CONC	VCT-1/-2	RCB-3	---	PT-7E	---	PT-7E	---	PT-7E	---	PT-7E	---	PT-1F	VARIES	VCT-2 PERIMETER, PT-7 (SEMI-GLOSS)
	A-101	MALL OF HONOR	CONC	VCT-1/-2	RCB-3	GYP BD	VWC-1	GYP BD	VWC-1	GYP BD	VWC-1	GYP BD / BR	VWC-1/PT-7E	---	ACT-2	12'-0"	VCT-2 PERIMETER
	A-102	OPTICAL	CONC	CPT-2	RCB-2	GYP BD	PT-1E	GYP BD	PT-1E	GYP BD	PT-1E	GYP BD	PT-1E		ACT-2	9'-0"	
	A-103	OPTICAL LAB	CONC	VCT-3	RCB-2	GYP BD	PT-1E	GYP BD	PT-1E	GYP BD	PT-1E	GYP BD	PT-1E		ACT-2	9'-0"	
	A-104	DUNKIN DONUTS	CONC	QT-1/G-1	QTB-1/G-1	GYP BD	FRP-2/VWG-3	GYP BD	FRP-2/VWG-3	GYP BD	FRP-2/VWG-3	GYP BD	FRP-2/VWG-3		VPC-1	10'-0"	
	A-105	DUNKIN DONUTS BACKROOM	CONC	QT-1/G-1	QTB-1/G-1	GYP BD	FRP-2	GYP BD	FRP-1	GYP BD	FRP-1	GYP BD	FRP-2	---	VPC-1	9'-0"	
	A-106	ANTHONY'S PIZZA	CONC	PCT-1/EG-2	CTB-1/EG-2	GYP BD	FRP-1/PT-6	GYP BD	MTL-1	GYP BD	FRP-1/VWG-4	GYP BD	MTL-1		ACT-3	10'-0"	
	A-107	HALL	CONC	PCT-2/EG-2	PCB-2/EG-2	GYP BD	CT-8/EG-5	GYP BD	CT-8/EG-5	GYP BD	CT-8/EG-5	GYP BD	CT-8/EG-5		ACT-3	10'-0"	
	A-108	CHARLEY'S SUBS	CONC	PCT-2/EG-2	PCB-2/EG-2	GYP BD	CT-3/CT-4/EG-3	GYP BD	MUR-1/CT-3/EG-3	GYP BD	PT-10/CT-3/EG-3	GYP BD	CT-3/EG-3		ACT-3	10'-0"	
	A-109	BREAK AREA	CONC	PCT-2/EG-2	PCB-2/EG-2	GYP BD	CT-8/EG-5	GYP BD	CT-8/EG-5	GYP BD	CT-8/EG-5	GYP BD	CT-8/EG-5		ACT-3	10'-0"	
	A-110	BACKROOM SUPPORT	CONC	PCT-2/EG-2	PCB-2/EG-2	GYP BD	CT-8/EG-5	GYP BD	CT-8/EG-5	GYP BD	CT-8/EG-5	GYP BD	CT-8/EG-5		ACT-3	9'-0"	
	A-111	OFFICE	CONC	VCT-2	RCB-3	GYP BD	PT-7E	GYP BD	PT-7E	GYP BD	PT-7E	GYP BD	PT-7E		ACT-3	9'-0"	
	A-112	IT CLOSET	CONC	VCT-2	RCB-3	GYP BD	PT-7E	GYP BD	PT-7E	GYP BD	PT-7E	GYP BD	PT-7E		ACT-1	9'-0"	
	A-113	LP OFFICE	CONC	VCT-2	RCB-3	GYP BD	PT-7E	GYP BD	PT-7E	GYP BD	PT-7E	GYP BD	PT-7E		ACT-1	9'-0"	
	A-114	LP SURVEILLANCE	CONC	VCT-2	RCB-3	GYP BD	PT-7E	GYP BD	PT-7E	GYP BD	PT-7E	GYP BD	PT-7E		ACT-1	9'-0"	
	A-115	JANITOR	CONC	PCT-1/EG-1	CTB-1/EG-1	GYP BD	CT-1/CT-2/EG-1	GYP BD	CT-1/CT-2/EG-1	GYP BD	CT-1/CT-2/EG-1	GYP BD	CT-1/CT-2/EG-1		EX	7'-6"	USE PT-8S ON WALLS ABOVE TILE
	A-116a	WOMEN	CONC	PCT-1/EG-1	CTB-1/EG-1	GYP BD	CT-1/CT-2/EG-1	GYP BD	CT-1/CT-2/EG-1	GYP BD	CT-1/CT-2/EG-1	GYP BD	CT-1/CT-2/EG-1		EX	7'-6"	USE PT-8S ON WALLS ABOVE TILE
	A-116	WOMEN	CONC	PCT-1/EG-1	CTB-1/EG-1	GYP BD	CT-1/CT-2/EG-1	GYP BD	CT-1/CT-2/EG-1	GYP BD	CT-1/CT-2/EG-1	GYP BD	CT-1/CT-2/EG-1		EX	7'-6"	USE PT-8S ON WALLS ABOVE TILE
	A-117a	MEN	CONC	PCT-1/EG-1	CTB-1/EG-1	GYP BD	CT-1/CT-2/EG-1	GYP BD	CT-1/CT-2/EG-1	GYP BD	CT-1/CT-2/EG-1	GYP BD	CT-1/CT-2/EG-1		EX	7'-6"	USE PT-8S ON WALLS ABOVE TILE
	A-117b	MEN	CONC	PCT-1/EG-1	CTB-1/EG-1	GYP BD	CT-1/CT-2/EG-1	GYP BD	CT-1/CT-2/EG-1	GYP BD	CT-1/CT-2/EG-1	GYP BD	CT-1/CT-2/EG-1		EX	7'-6"	USE PT-8S ON WALLS ABOVE TILE
	A-118	FOOD STOCK	CONC	VCT-2	RCB-3	GYP BD	PT-7S	GYP BD	PT-7S	GYP BD	PT-7S	GYP BD	PT-7S	GYP. BD.	PT-1F	8'-10"	
	A-119	FOOD COURT	CONC	VCT-1/-2	RCB-3	GYP BD	VWC-1	GYP BD	VWC-1	GYP BD	VWC-1	---	---		ACT	12'-0"	MATCH EXISTING TILES & GRID
	A-120	CONCESSIONS	CONC	VCT-1/-2	RCB-3	GYP BD	VWC-1	---	---	---	---	---	---		ACT	12'-0"	MATCH EXISTING TILES & GRID
	A-121	GNC	CONC	VCT-5	RCB-5	GYP BD	PT-1E	GYP BD	PT-1E	GYP BD	PT-1E	GYP BD	PT-1E		ACT-1	9'-0"	
	A-122	GNC STOCK RM	CONC	VCT-5	RCB-5	GYP BD	PT-1E	GYP BD	PT-1E	GYP BD	PT-1E	GYP BD	PT-1E		ACT-1	9'-0"	
	A-123	BARBER SHOP	CONC	VCT-4	RCB-2	GYP BD	PT-13E	GYP BD	PT-13E	GYP BD	PT-13E	GYP BD	PT-13E		ACT-2	9'-0"	
	A-124	OFFICE	CONC	VCT-4	RCB-2	GYP BD	PT-13E	GYP BD	PT-13E	GYP BD	PT-13E	GYP BD	PT-13E		ACT-2	9'-0"	
AREA "B" ROOMS	B-100	EXCHANGE RETAIL SALES	CONC	VCT-4	RCB-2	GYP BD	PT	GYP BD	PT	GYP BD	PT	GYP BD	PT		ACT-1	12'-0"	SEE FINISH PLAN & ELEVATIONS FOR PAINT LOCATION
	B-101	HALL	CONC	VCT-2	RCB-1	GYP BD	PT-7E	GYP BD	PT-7E	GYP BD	PT-7E	GYP BD	PT-7E		ACT-1	9'-0"	
	B-102	STORE MANAGER	CONC	VCT-2	RCB-1	GYP BD	PT-7E	GYP BD	PT-7E	GYP BD	PT-7E	GYP BD	PT-7E		ACT-1	8'-0"	
	B-103	STOCK MANAGER	CONC	VCT-2	RCB-1	GYP BD	PT-7E	GYP BD	PT-7E	GYP BD	PT-7E	GYP BD	PT-7E		ACT-1	8'-0"	
	B-104	DEPT #1 MANAGER	CONC	VCT-2	RCB-1	GYP BD	PT-7E	GYP BD	PT-7E	GYP BD	PT-7E	GYP BD	PT-7E		ACT-1	8'-0"	
	B-105	DEPT #2 MANAGER	CONC	VCT-2	RCB-1	GYP BD	PT-7E	GYP BD	PT-7E	GYP BD	PT-7E	GYP BD	PT-7E		ACT-1	8'-0"	
	B-106	OPERATIONS MANAGER	CONC	VCT-2	RCB-1	GYP BD	PT-7E	GYP BD	PT-7E	GYP BD	PT-7E	GYP BD	PT-7E		ACT-1	8'-0"	
	B-107	COOLER/FREEZER															
	B-108	COOLER															
	B-109	TOOL															
	B-110	MPA DOCK AREA										GYP BD	PT-6S				
	B-111	SECURED STOCK										GYP BD	PT-6S				
	B-112a	EMPLOYEE HALL	CONC	VCT-2	RCB-1	GYP BD	PT-7E	GYP BD	PT-7E	GYP BD	PT-7E	GYP BD	PT-7E		ACT-1	9'-0"	
	B-112b	EMPLOYEE VESTIBULE	CONC	VCT-2	RCB-1	GYP BD	PT-7E	GYP BD	PT-7E	GYP BD	PT-7E	GYP BD	PT-7E		ACT-1	9'-0"	
	B-113	MEN	CONC	PCT-1/EG-1	CTB-1/EG-1	GYP BD	CT-1/CT-2/EG-1	GYP BD	CT-1/CT-2/EG-1	GYP BD	CT-1/CT-2/EG-1	GYP BD	CT-1/CT-2/EG-1		EX	7'-6"	USE PT-8S ON WALLS ABOVE TILE
	B-114	MEN LOCKERS	CONC	PCT-1/EG-1	CTB-1/EG-1	GYP BD	CT-1/CT-2/EG-1	GYP BD	CT-1/CT-2/EG-1	GYP BD	CT-1/CT-2/EG-1	GYP BD	CT-1/CT-2/EG-1		EX	8'-0"	USE PT-8S ON WALLS ABOVE TILE
	B-115	WOMEN	CONC	PCT-1/EG-1	CTB-1/EG-1	GYP BD	CT-1/CT-2/EG-1	GYP BD	CT-1/CT-2/EG-1	GYP BD	CT-1/CT-2/EG-1	GYP BD	CT-1/CT-2/EG-1		EX	7'-6"	USE PT-8S ON WALLS ABOVE TILE
	B-116	WOMEN LOCKERS	CONC	PCT-1/EG-1	CTB-1/EG-1	GYP BD	CT-1/CT-2/EG-1	GYP BD	CT-1/CT-2/EG-1	GYP BD	CT-1/CT-2/EG-1	GYP BD	CT-1/CT-2/EG-1		EX	8'-0"	USE PT-8S ON WALLS ABOVE TILE
	B-117	BREAK ROOM	CONC	VCT-2	RCB-1	GYP BD	PT-7E	GYP BD	PT-7E	GYP BD	PT-7E	GYP BD	PT-7E		EX	9'-0"	
	B-118	EQUIPMENT	CONC	VCT-2	RCB-1	GYP BD	PT-7E	GYP BD	PT-7E	GYP BD	PT-7E	GYP BD	PT-7E		EX	8'-0"	
	B-119	ICA OFFICE	CONC	VCT-2	RCB-1	GYP BD	PT-7E	GYP BD	PT-7E	GYP BD	PT-7E	GYP BD	PT-7E		EX	8'-0"	
	B-120	CASH ROOM	CONC	VCT-2	RCB-1	GYP BD	PT-7E	GYP BD	PT-7E	GYP BD	PT-7E	GYP BD	PT-7E		ACT-1	8'-0"	
	B-121	DROP ROOM	CONC	VCT-2	RCB-1	GYP BD	PT-7E	GYP BD	PT-7E	GYP BD	PT-7E	GYP BD	PT-7E		ACT-1	8'-0"	
	B-122	EXTERIOR OUTDOOR SALES													---	12'-0"	SEE SECTIONS
	B-123	COVERED OUTDOOR SALES	CONC	---	---	BRICK	---	BRICK	---	---	---	BRICK	---				
	B-124	MECHANICAL															
AREA "C" ROOMS	C-100	MCSS RETAIL AREA	CONC	VCT-1	RCB-1	GYP BD	PT-2E/PT-3E	GYP BD	PT-2E/PT-3E	GYP BD	PT-2E/PT-3E	GYP BD	PT-2E/PT-3E		EX	12'-0"	SEE INTERIOR ELEVATIONS FOR PAINT LOCATION
	C-101	ALTERATIONS CUSTOMER AREA	CONC	VCT-3	RCB-2	GYP BD	PT-12S	GYP BD	PT-12S	GYP BD	PT-12S	GYP BD	PT-12S	GYP BD	PT-1F	7'-6"	SEE SECTIONS
	C-102	ALTERATIONS WORK ROOM	CONC	VCT-3	RCB-2	GYP BD	PT-12S	GYP BD	PT-12S	GYP BD	PT-12S	GYP BD	PT-12S	GYP BD	PT-1F	7'-6"	SEE SECTIONS
	C-103	MCSS STOCK AREA	CONC	RCB-1	---	GYP BD/PLY	PT-6S	---	---	---	---	GYP BD/PLY	PT-6S	---	---	---	RCB AT ALTERATIONS WALLS
	C-104	OFFICE	CONC	CPT-1	RCB-2	GYP BD	PT-6S	GYP BD	PT-6S	GYP BD	PT-6S	GYP BD	PT-6S	GYP BD	PT-1F	8'-0"	
	C-105	BREAK ROOM	CONC	VCT-1	RCB-2	GYP BD	PT-6S	GYP BD	PT-6S	GYP BD	PT-6S	GYP BD	PT-6S	GYP BD	PT-1F	8'-0"	
	C-106	UNISEX	CONC	PCT-1/EG-1	CTB-1/EG-1	GYP BD	CT-1/CT-2/EG-1	GYP BD	CT-1/CT-2/EG-1	GYP BD	CT-1/CT-2/EG-1	GYP BD	CT-1/CT-2/EG-1	GYP BD	PT-1F	8'-0"	USE PT-8S ON WALLS ABOVE TILE
	C-107	JANITOR	CONC	PCT-1/EG-1	CTB-1/EG-1	GYP BD	CT-1/CT-2/EG-1	GYP BD	CT-1/CT-2/EG-1	GYP BD	CT-1/CT-2/EG-1	GYP BD	CT-1/CT-2/EG-1	GYP BD	PT-1F	8'-0"	USE PT-8S ON WALLS ABOVE TILE
	C-108	STOCK AREA															
	C-109	STAIRWELL															
	C-110	HALL															
	C-111	COMPUTER ROOM															
	C-112	OFFICE AREA	CONC	VCT-2	RCB-1	GYP BD	PT-7E	GYP BD	PT-7E	GYP BD	PT-7E	GYP BD	PT-7E		EX	7'-9"	
	C-113	UNISEX	CONC	PCT-1/EG-1	CTB-1/EG-1	GYP BD	CT-1/CT-2/EG-1	GYP BD	CT-1/CT-2/EG-1	GYP BD	CT-1/CT-2/EG-1	GYP BD	CT-1/CT-2/EG-1	GYP BD	PT-1F	7'-9"	TILE & PT-8S TO MATCH DETAIL "S/A6.00"
	C-114	EUTC ROOM	CONC	VCT-2	RCB-1	GYP BD	PT-7E	GYP BD	PT-7E	GYP BD	PT-7E	GYP BD	PT-7E		EX	7'-9"	
	C-115	TRAINING ROOM	CONC	VCT-2	RCB-1	GYP BD	PT-7E	GYP BD	PT-7E	GYP BD	PT-7E	GYP BD	PT-7E		EX	7'-9"	
	C-116	MECHANICAL ROOM															
	C-117	BASEMENT AREA															
	C-118	BASEMENT AREA	CONC	---	---	CONC. BLK	PT-	CONC. BLK	PT-	CONC. BLK	PT-	CONC. BLK	PT-	CONC.	EX	7'-9"	
	C-119	MECHANICAL/ELECTRICAL AREA															
	C-120	MECHANICAL/ELECTRICAL ROOM															
	C-121	MECHANICAL/ELECTRICAL ROOM															
	C-122	OUTDOOR MECHANICAL AREA															

GRAPHICS SCHEDULE

ITEMS FURNISHED / INSTALLED AS FOLLOWS:
A -- AAFES
C -- CONTRACTOR

	MARK	DESCRIPTION	FURNISHED BY:	INSTALLED BY:	REMARKS
EXCHANGE MALL	GX-X-02	MALL OF HONOR BUNTING RIBBON	A	C	
	GX-X-03	MALL OF HONOR BUNTING STARS	A	C	
	GX-X-05	MALL OF HONOR COLUMN TVS	A	C	MAY REQUIRE EXTV OVERSIGHT/INSTALLATION
	GX-X-06	EXCHANGE IDENTITY SIGN	A	C	
	GX-X-07	RECESSED GRAPHICS AT MALL ENTRY	A	C	
	GX-X-11	"SEA TO SHINING SEA" MURAL	A	C	FOLLOW CURRENT PROCESS
	GX-X-13	FOOD COURT DIMENSIONAL TYPE (TV TOWER)	A	C	
	GX-X-14	FOOD COURT PROMOTIONAL GRAPHICS	A	C	
	GX-X-15	BUBBLE GRAPHIC	A	C	FOLLOW CURRENT PROCESS
	GX-V-01a-1	BLUE WALL COVERING ON LEFT AND RIGHT SIDE OF MAIN VESTIBULE	A	C	
	GX-V-01a-2	BLUE WALL COVERING ON LEFT AND RIGHT SIDE OF MAIN VESTIBULE	A	C	
	GX-V-02-2	WELCOME TO YOUR "FT MYER" EXCHANGE	A	C.	
	GX-V-02-5	WELCOME	A	C.	
	GX-V-02(3)	MALL DIRECTORY-DIMENSIONAL LETTERS	A	C.	
	GX-V-02(4)	BASE MAP-DIMENSIONAL LETTERS	A	C.	
	GX-GM-02-1	WE SERVE THE BEST CUSTOMERS IN THE WORLD	A	C.	
	GX-GM-02-2	THANK YOU FOR SHOPPING YOUR EXCHANGE	A	C.	
	GX-GM-03-(2)	RESTROOM WAYFINDING BLADE SIGN	A	C.	
	GX-GM-03-(3)	ATM BLADE SIGN	A	C.	
	GX-GM-03-4	RESTROOM/DRINKING FOUNTAIN NICHE GRAPHICS	A	C.	
	GX-V-09	VENDING NICHE GRAPHICS	A	C.	
	GX-V-10	COMMUNITY INFO PINNABLE SURFACE	A	C.	
	GX-V-11	COMMUNITY INFO DIMENSIONAL LETTERING	A	C.	

ITEMS FURNISHED / INSTALLED AS FOLLOWS:
A -- AAFES
C -- CONTRACTOR

	MARK	DESCRIPTION	FURNISHED BY:	INSTALLED BY:	REMARKS
EXTERIOR	GX-E-11	EXTERIOR CUSTOMER MISSION PLAQUE	A	C	
	GX-E-13	EXCHANGE STORE & MALL HOURS	A	C	
	GX-E-15	FOOD COURT VINYL TYPE & HOURS	A	C	
	GX-E-16	FOOD COURT RESTAURANT LOGOS	A	C	
FOOD COURT	GX-F-02	WE SERVE THE BEST CUSTOMERS IN THE WORLD	A	C.	
	GX-F-08	WALLCOVER WITH X	A	C.	
	GX-F-09	DIMENSIONAL TAGLINE WE SAVE YOU MONEY EVERYDAY	A	C.	
POWERZONE	GX-P-01a	POWERZONE DIMENSIONAL LOGO	A	C	3D LETTERING PROVIDED BY MK PRINT SOURCE
	GX-P-02	POWERZONE TAG LINE	A	C	3D LETTERING PROVIDED BY MK PRINT SOURCE

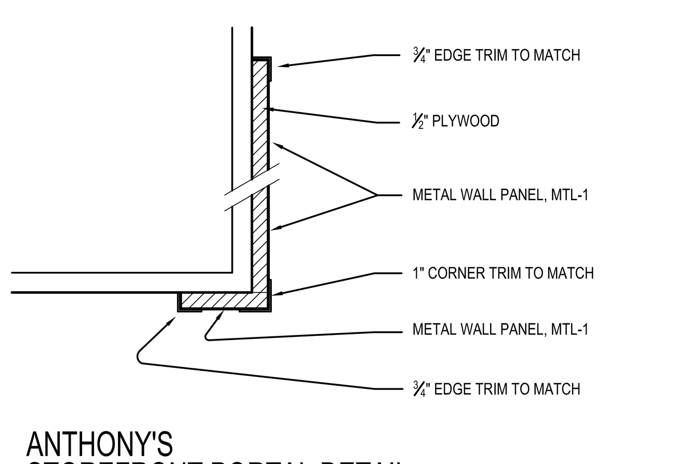

3 / A7.0 ANTHONY'S STOREFRONT PORTAL DETAIL
SCALE: 3" = 1'-0"

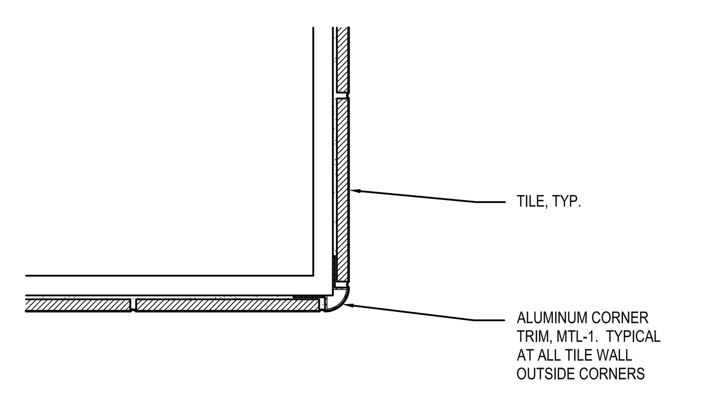

2 / A7.0 TILE BULLNOSE DETAIL
SCALE: 3" = 1'-0"

ROOM FINISH SCHEDULE NOTES

1. EXISTING FINISHES TO BE REMOVED COMPLETE.
2. SURFACES TO BE LEVEL, SQUARE, AND PREPARED ACCORDING TO MANUFACTURERS INSTRUCTIONS PRIOR TO INSTALLATION.
3. SEE INTERIOR ELEVATIONS, FINISH PLANS, MILLWORK DETAILS, ETC. FOR FURTHER INFORMATION IN TERMS OF FINISH LOCATIONS.
4. SEE FINISH PLANS FOR TRANSITION STRIP LOCATIONS.

PAINT KEY

EXAMPLE: PT-1S
PT = PAINT
NUMBER = PAINT COLOR
LETTER = PAINT SHEEN

SHEEN GUIDE
E = EGGSHEL / SATIN
F = FLAT
S = SEMI-GLOSS

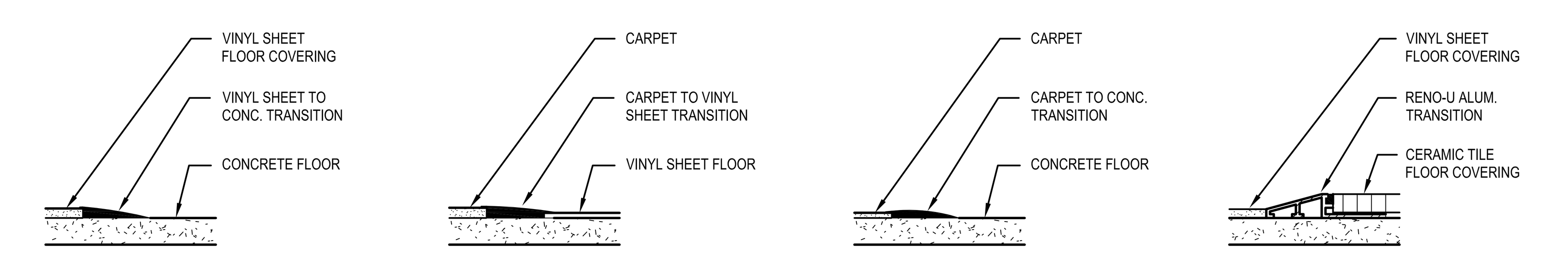

1 / A7.0 TRANSITION STRIPS
SCALE: 1/4" = 1'-0"

DATES AND REVISIONS

No.	Date/Description
	04.11.12 - BID

EXCHANGE™

RICHARD L. BOWEN + ASSOCIATES INC.
13000 Shaker Boulevard / Cleveland, Ohio 44120
Phone: (216) 491-9300 Fax: (216) 491-8053
www.rlba.com - email@rlba.com

ENGINEERS • ARCHITECTS • CONSTRUCTION MANAGERS

FT. MYER EXCHANGE
JBMHH - MYER
ARLINGTON, VIRGINIA

INTERIOR FINISH MATERIAL LIST & ROOM FINISH SCHEDULE

DRAWN BY: RTV
CHECKED BY: --
RLB NO.: 7800.02
DRAWING NO.
A7.0

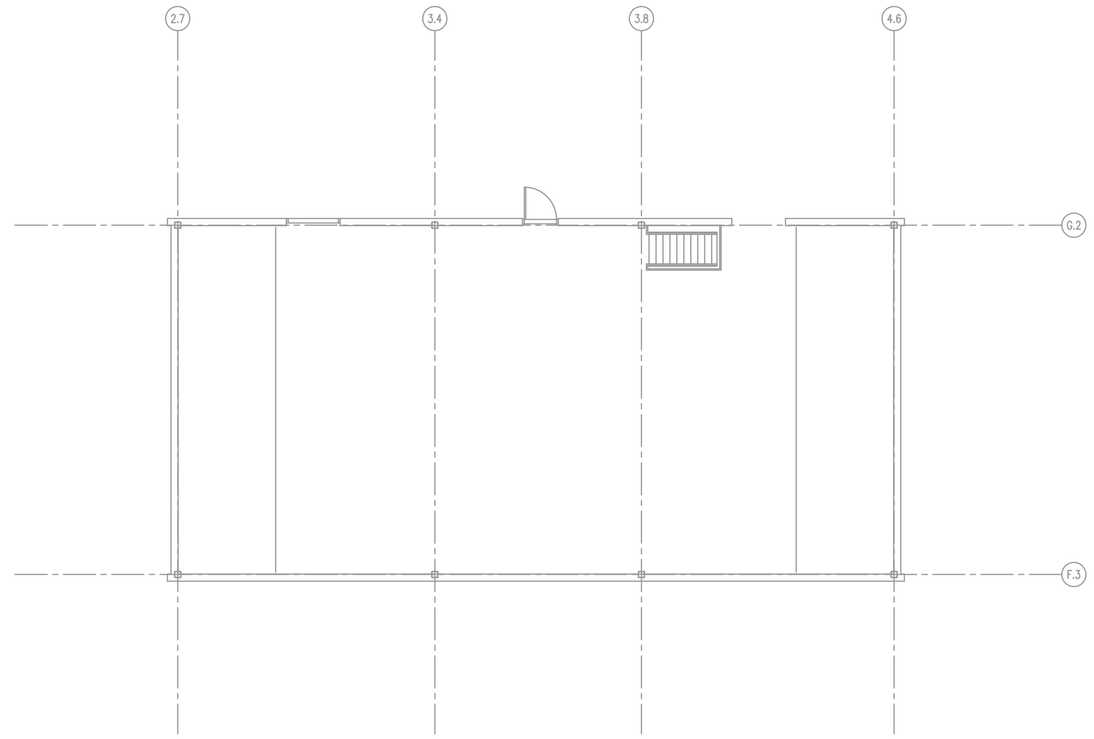

2 A7.1 MECHANICAL PENTHOUSE FLOOR PLAN
SCALE: 1/8" = 1'-0"
0 1' 2' 4' 8'
N TRUE NORTH

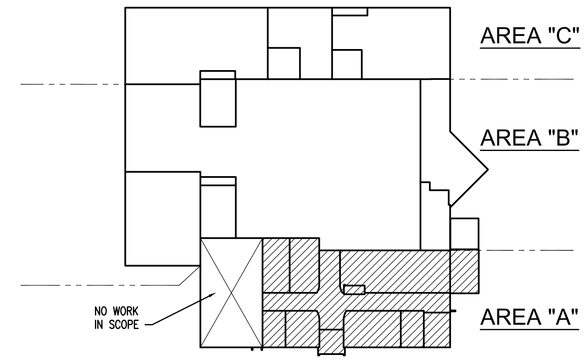

KEY PLAN
SCALE: N.T.S.
N TRUE NORTH

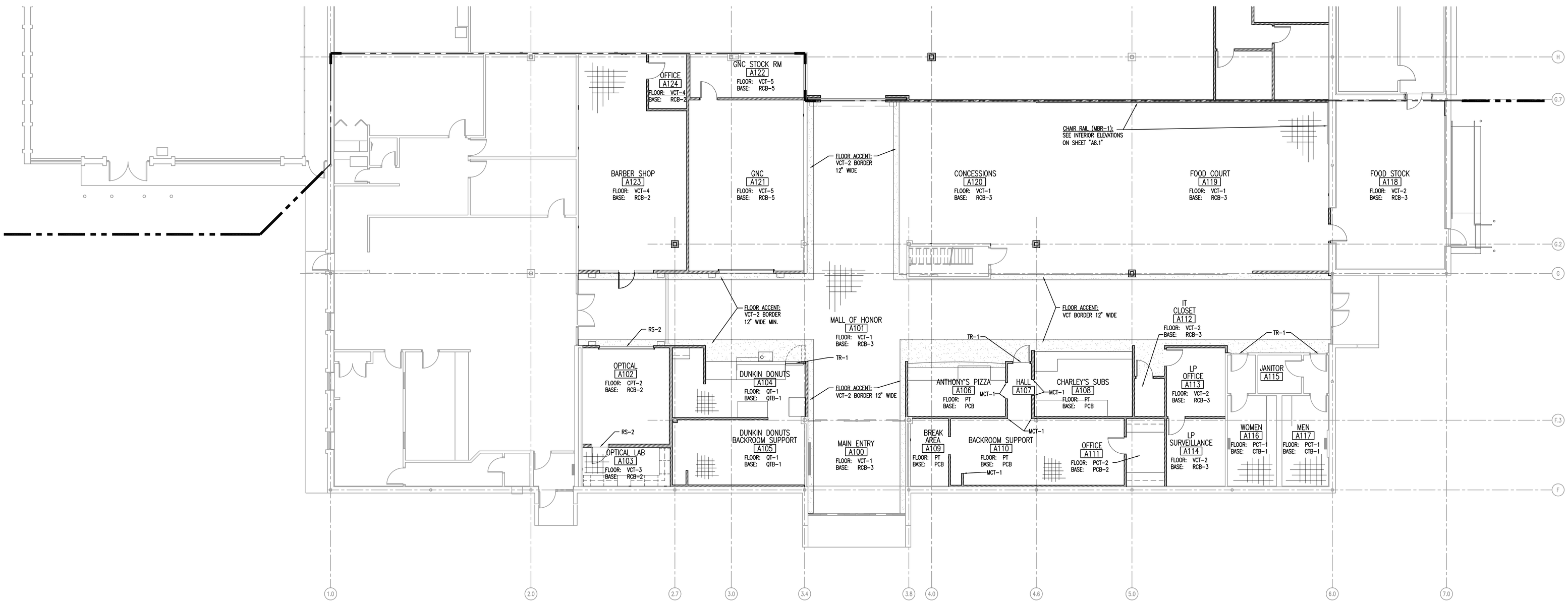

1 A7.1 ENLARGED MALL & FOOD COURT FLOOR PLAN
SCALE: 1/8" = 1'-0"
0 1' 2' 4' 8'
N TRUE NORTH

AREA "A"

DATES AND REVISIONS	
No.	Date/Description
	04.11.12 – BID

EXCHANGE™

RICHARD L. BOWEN + ASSOCIATES INC.
ARCHITECTS • ENGINEERS • CONSTRUCTION MANAGERS
13000 Shaker Boulevard / Cleveland, Ohio 44120
Phone: (216) 491-9300 Fax: (216) 491-8053
www.rlba.com • email@rlba.com

FT. MYER EXCHANGE
JBMHH - MYER
ARLINGTON, VIRGINIA

AREA "A"
FLOOR FINISH PLAN

DRAWN BY: RTV
CHECKED BY: --
RLB NO.: 7800.02

DRAWING NO.
A7.1

P:\7800\7800.02 FT. MYER PX IMAGE UPGRADE CONST. CONTRACT DOCS\ARCH\7800.02_A07-01.DWG | PLOTTED 04.09.2012 09:42AM BY ANDREW HENLEY

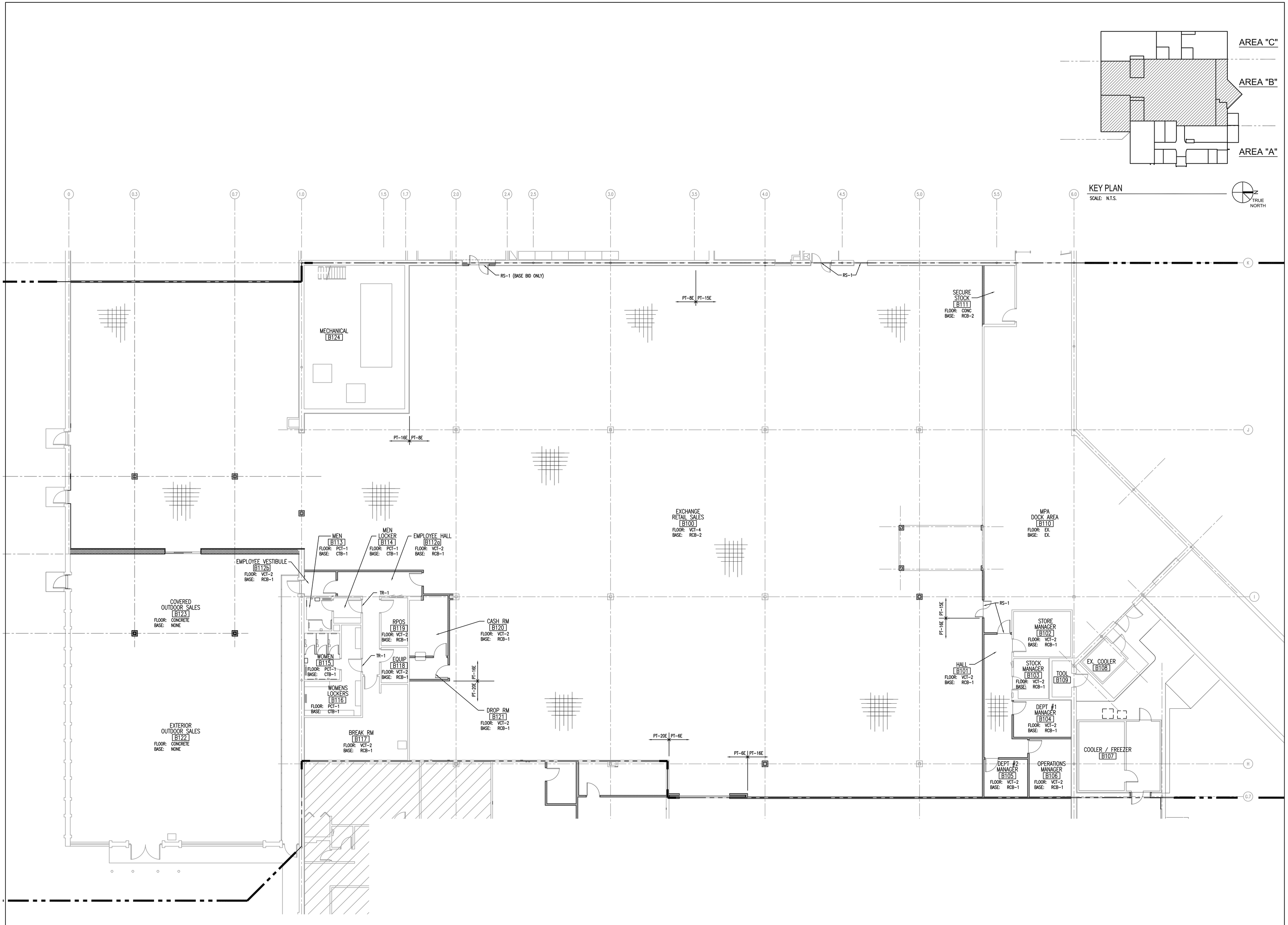

KEY PLAN
SCALE: N.T.S.

N
TRUE NORTH

1 A7.2 ENLARGED RETAIL SALES AREA FLOOR PLAN
SCALE: 1/8" = 1'-0"

0 1' 2' 4' 8'

N
TRUE NORTH

AREA "B"

DATES AND REVISIONS	
No.	Date/Description
	04.11.12 – BID

EXCHANGE™

RICHARD L. BOWEN + ASSOCIATES INC.
ARCHITECTS • ENGINEERS • CONSTRUCTION MANAGERS
13000 Shaker Boulevard / Cleveland, Ohio 44120
Phone: (216) 491-9300 Fax: (216) 491-9053
www.rlba.com - email@rlba.com

FT. MYER EXCHANGE
JBMHH - MYER
ARLINGTON, VIRGINIA

AREA "B"
FLOOR FINISH PLAN

DRAWN BY: RTV
CHECKED BY: --
RLB NO.: 7800.02

DRAWING NO.
A7.2

P:\7800\7800.02 FT. MYER PX IMAGE UPGRADE CONST. CONTRACT DOCS\ARCH\780002_A07-02.DWG | PLOTTED 04.09.2012 09:53AM BY ANDREW HENLEY

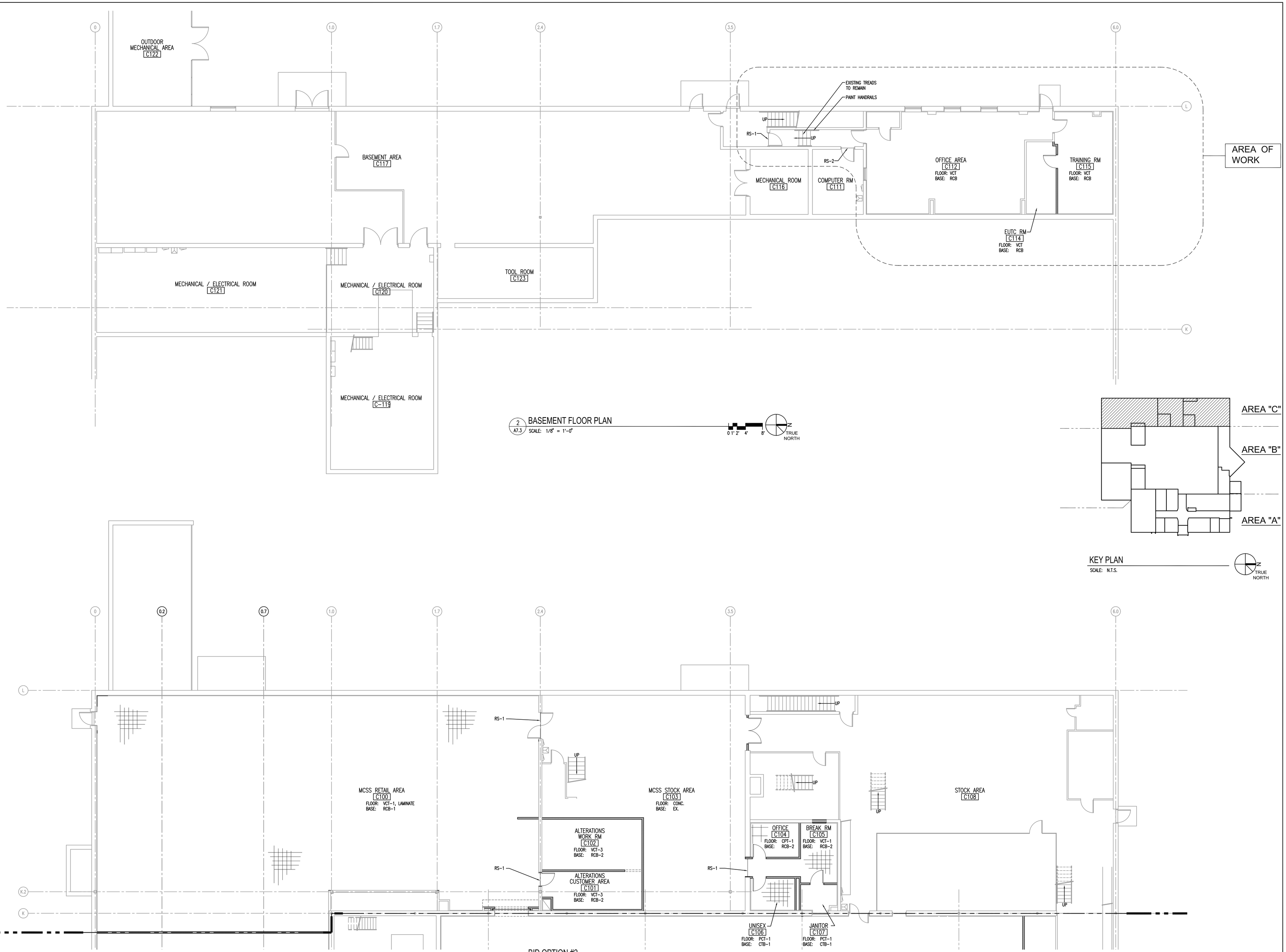

DATES AND REVISIONS	
No.	Date/Description
	04.11.12 – BID

EXCHANGE™

RICHARD L. BOWEN + ASSOCIATES INC.
13000 Shaker Boulevard / Cleveland, Ohio 44120
Phone: (216) 491-0300 Fax: (216) 491-8053
www.rlba.com - email@rlba.com

FT. MYER EXCHANGE
JBMHH - MYER
ARLINGTON, VIRGINIA

AREA "C"
FINISH FLOOR PLAN

DRAWN BY: RTV
CHECKED BY: --
RLB NO.: 7800.02

DRAWING NO.
A7.3

P:\7800\7800.02 FT. MYER PX IMAGE UPGRADE CONST. CONTRACT DOCS\ARCH\780002_A07-03.DWG | PLOTTED 04.26.2012 03:29PM BY RYAN VANJO

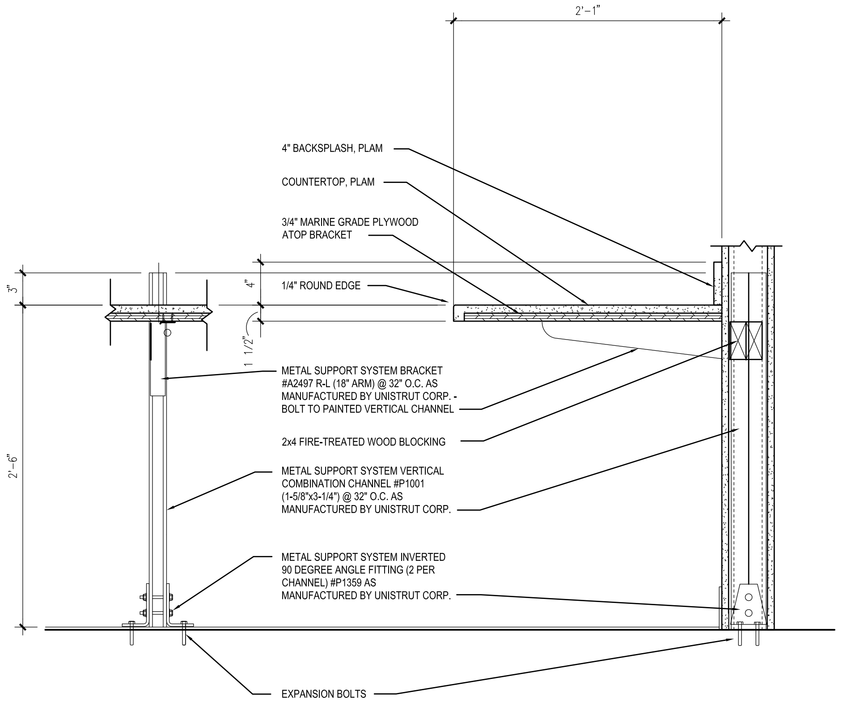

A A7.4 TYPICAL COUNTER DETAIL
SCALE: 1 1/2" = 1'-0"

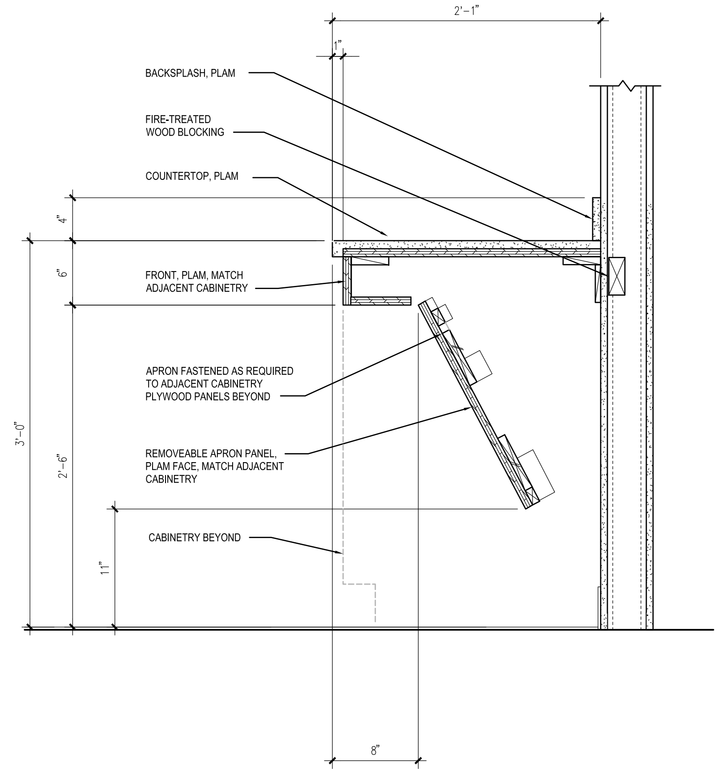

B A7.4 TYPICAL COUNTER DETAIL
SCALE: 1 1/2" = 1'-0"

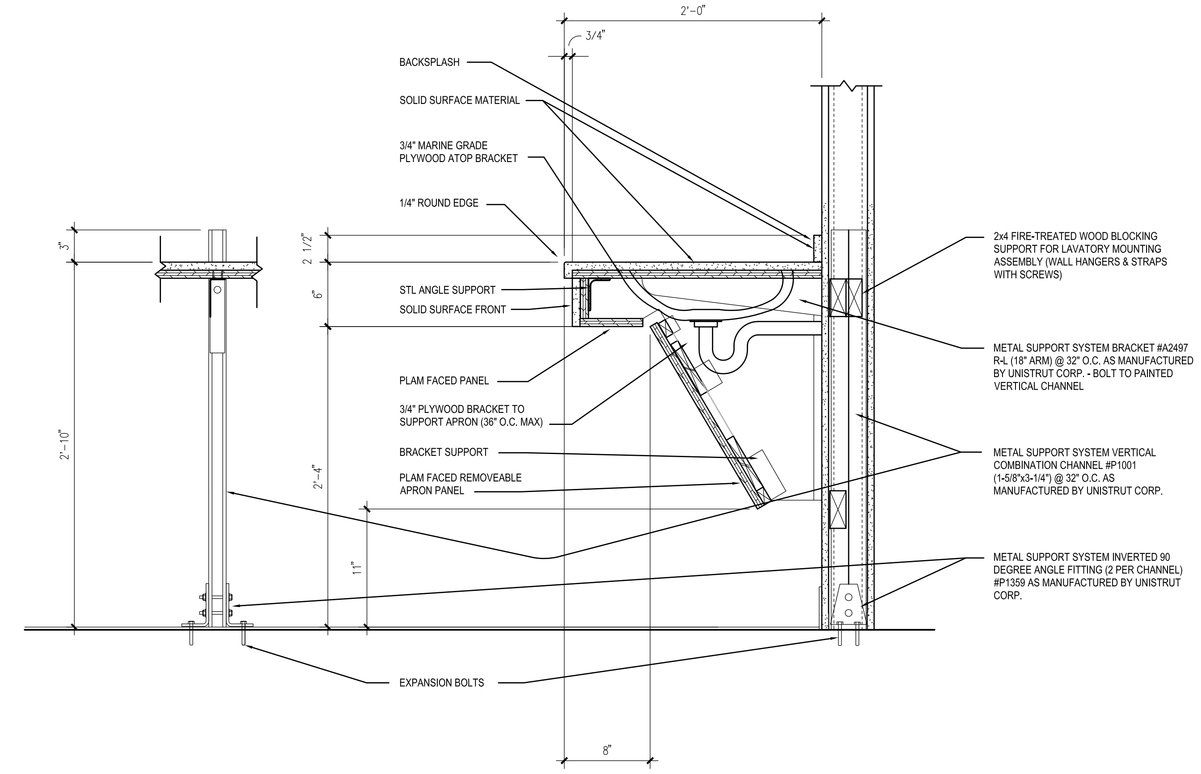

C A7.4 RESTROOM TYPICAL COUNTER DETAIL
SCALE: 1 1/2" = 1'-0"

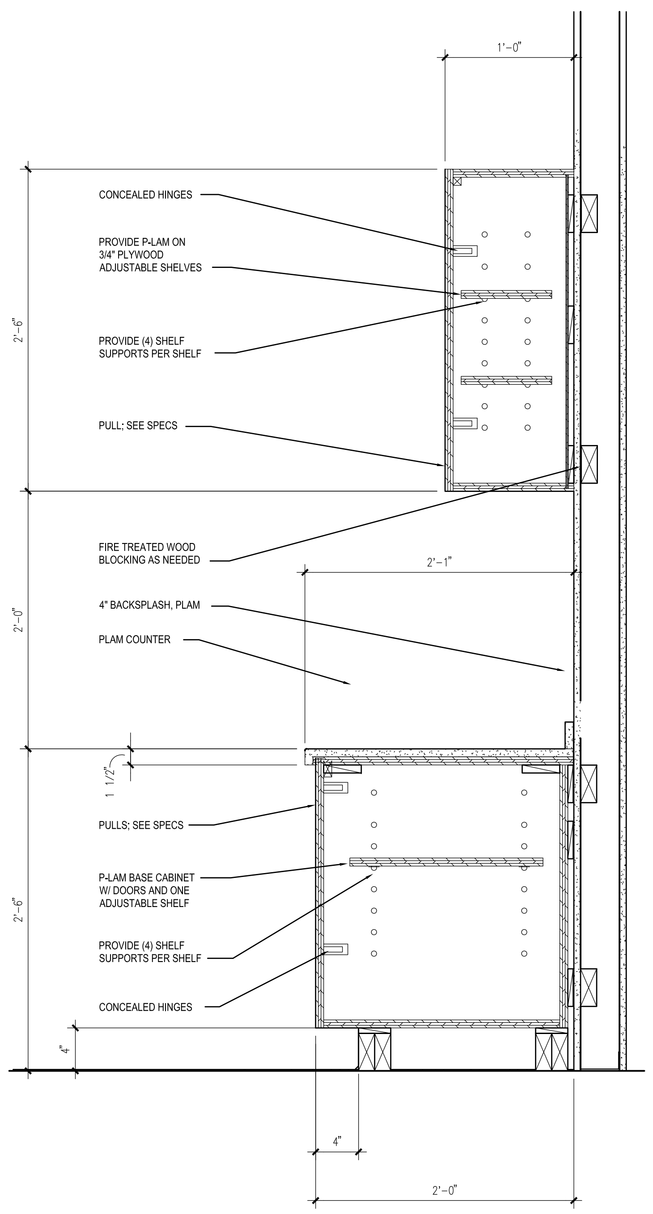

D A7.5 TYPICAL BASE & WALL CABINET DETAIL
SCALE: 1 1/2" = 1'-0"

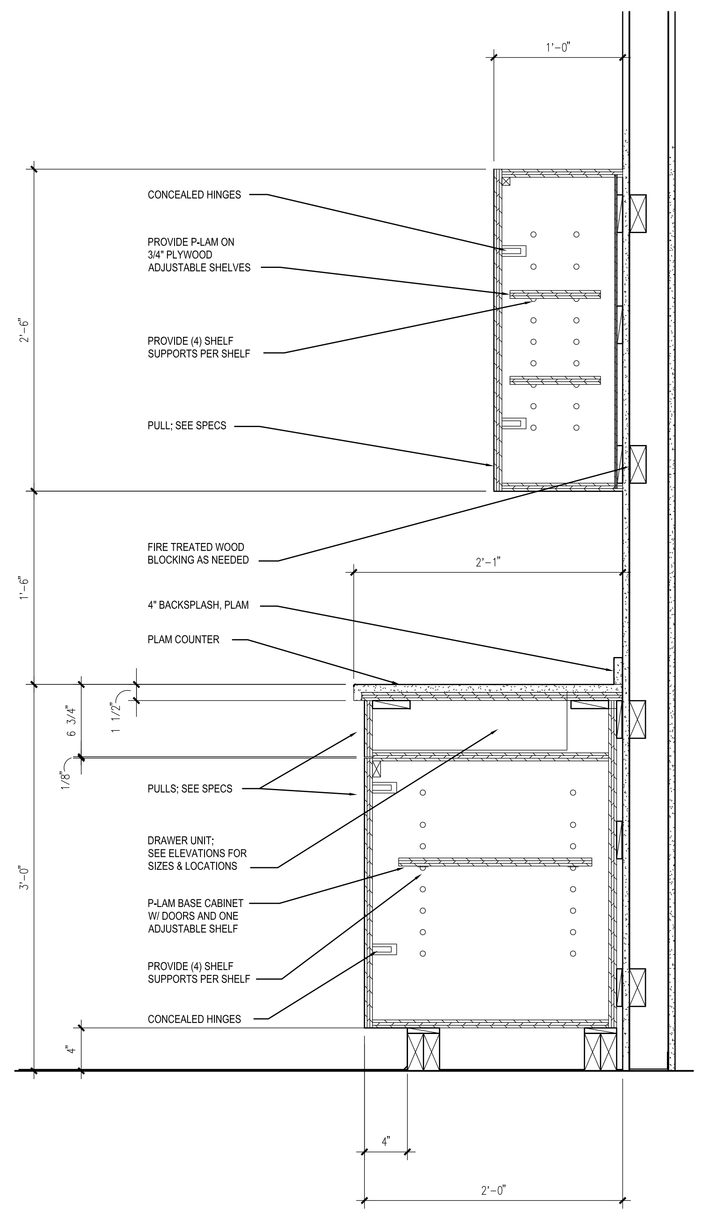

E A7.5 TYPICAL BASE & WALL CABINET DETAIL
SCALE: 1 1/2" = 1'-0"

MILLWORK GENERAL NOTES:

1. ALL EXPOSED PLYWOOD CABINET, DRAWERS AND PANEL SURFACES TO BE PLASTIC LAMINATE SURFACED (PLAM), EXCEPT AS NOTED.
2. ALL INTERIOR EXPOSED SURFACES OF CABINETS, DRAWERS AND SHELVES TO BE ALL INTERIOR EXPOSED SURFACES OF CABINETS, DRAWERS AND SHELVES TO BE PLASTIC LAMINATED SURFACED, EXCEPT AS NOTED.
3. ALL COUNTERS, LEDGES AND SPLASHES TO BE PLASTIC LAMINATE, U.N.O.
4. PROVIDE SUPPORTS WHERE REQUIRED TO HOLD COUNTER SPAN TO A MAXIMUM OF 48" O.C. PROVIDE CONTINUOUS 3x3x3/16 ANGLE SUPPORT FOR COUNTERS AT END WALL CONDITIONS. USE TAMPER-RESISTANT FASTENERS.
5. PROVIDE ALL WOOD BLOCKING AT MOUNTING HEIGHTS INDICATED ON ELEVATIONS.
6. REFER TO SPECIFICATIONS FOR INTERIOR ARCHITECTURAL WOODWORK.
7. COORDINATE OPENINGS ON BACK OF CABINETS FOR ELECTRICAL AND COMMUNICATIONS OUTLETS, PLUMBING LINES AS REQUIRED.
8. DOTTED LINE WORK INDICATES POSITION OF UNDER COUNTER FILES, FURNITURE AND EQUIPMENT PROVIDED BY OWNER. MILLWORK CONTRACTOR TO COORDINATE WITH OTHER WORK IN THIS PROJECT.
9. MEDIUM DENSITY FIBER BOARD (MDF) SHALL HAVE THE SAME MEANING AS PLYWOOD ON MILLWORK DETAILS ONLY.
10. FIELD VERIFY ALL EXISTING CONDITIONS AND DIMENSIONS.
11. THE CONTRACTOR SHALL COORDINATE AND ACCOMMODATE SINKS, FAUCET SETS, UNDER COUNTER EQUIPMENT, ETC. WITHIN THIS MILLWORK.

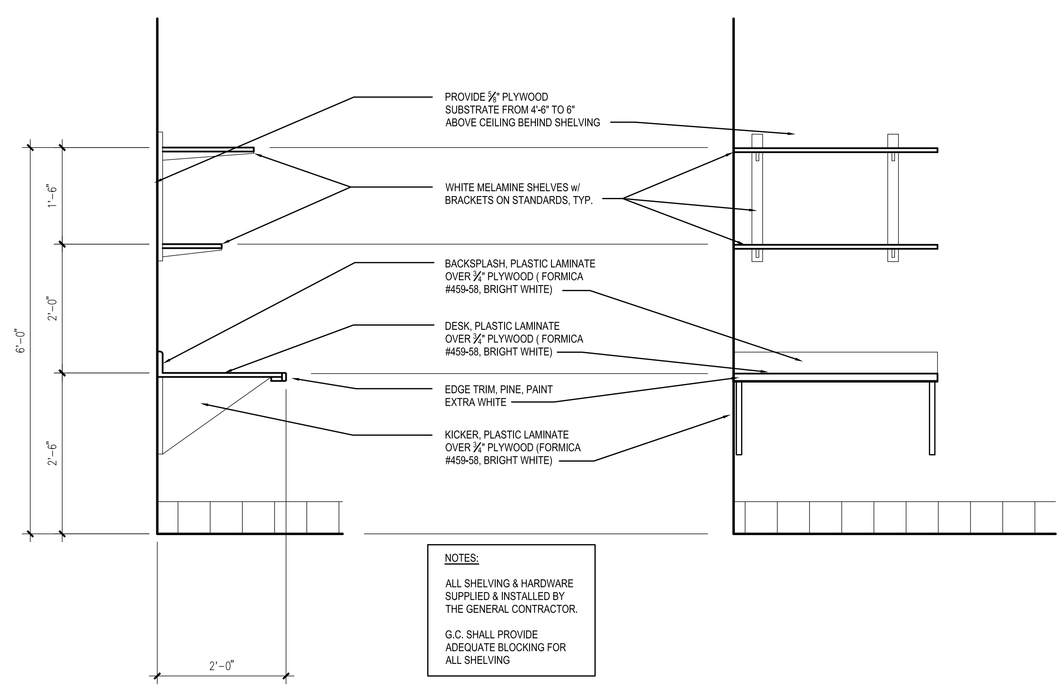

NOTES:

ALL SHELVING & HARDWARE SUPPLIED & INSTALLED BY THE GENERAL CONTRACTOR.

G.C. SHALL PROVIDE ADEQUATE BLOCKING FOR ALL SHELVING

F A7.4 DUNKIN DONUTS BUILT-IN DESK DETAIL
SCALE: 3/4" = 1'-0"

G A7.4 DUNKIN DONUTS BUILT-IN DESK DETAIL
SCALE: 3/4" = 1'-0"

DATES AND REVISIONS

No.	Date/Description
	04.11.12 – BID

EXCHANGE™

ARCHITECTS • ENGINEERS • MANAGERS • CONSTRUCTION

RICHARD L. BOWEN + ASSOCIATES INC.
13000 Shaker Boulevard / Cleveland, Ohio 44120
Phone: (216) 491-9300 Fax: (216) 491-8053
www.rlba.com - email@rlba.com

FT. MYER EXCHANGE
JBMHH - MYER
ARLINGTON, VIRGINIA

MILLWORK DETAILS

DRAWN BY: RTV
CHECKED BY: --
RLB NO.: 7800.02

DRAWING NO.
A7.4

P:\7800\7800.02 FT. MYER PX IMAGE UPGRADE CONST. CONTRACT DOCS\ARCH\780002_A07-04.DWG | PLOTTED 04.09.2012 09:44AM BY ANDREW HENLEY

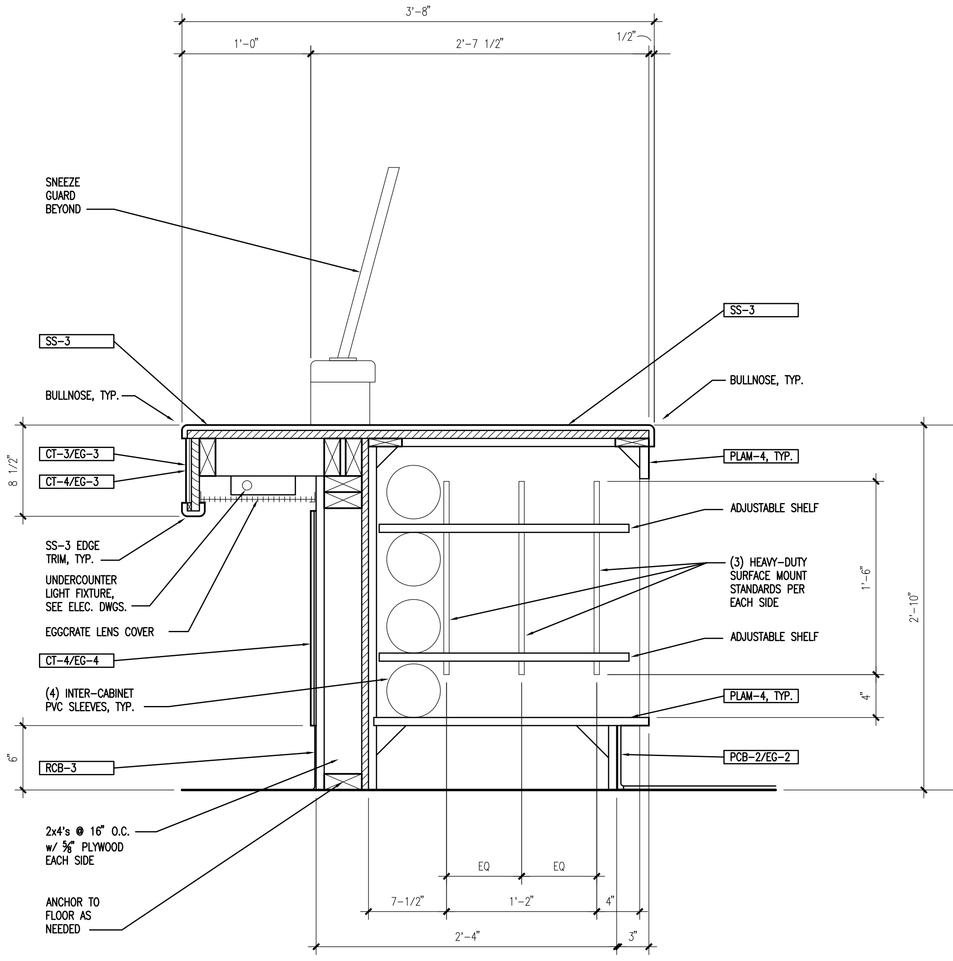

CHARLEY'S GRILLED SUBS
POS COUNTER DETAIL
A / A7.5 SCALE: 1 1/2" = 1'-0"

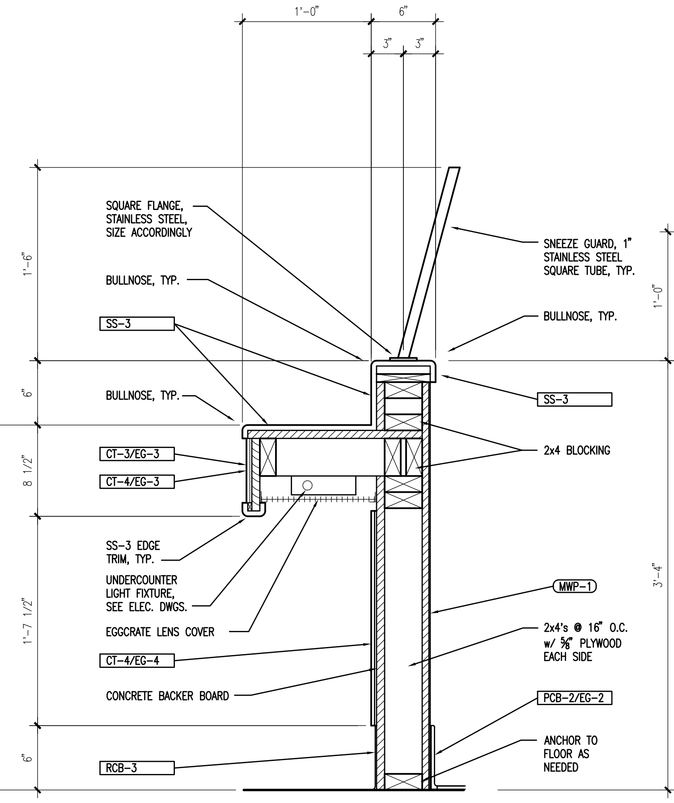

CHARLEY'S GRILLED SUBS
SERVER COUNTER DETAIL
B / A7.5 SCALE: 1 1/2" = 1'-0"

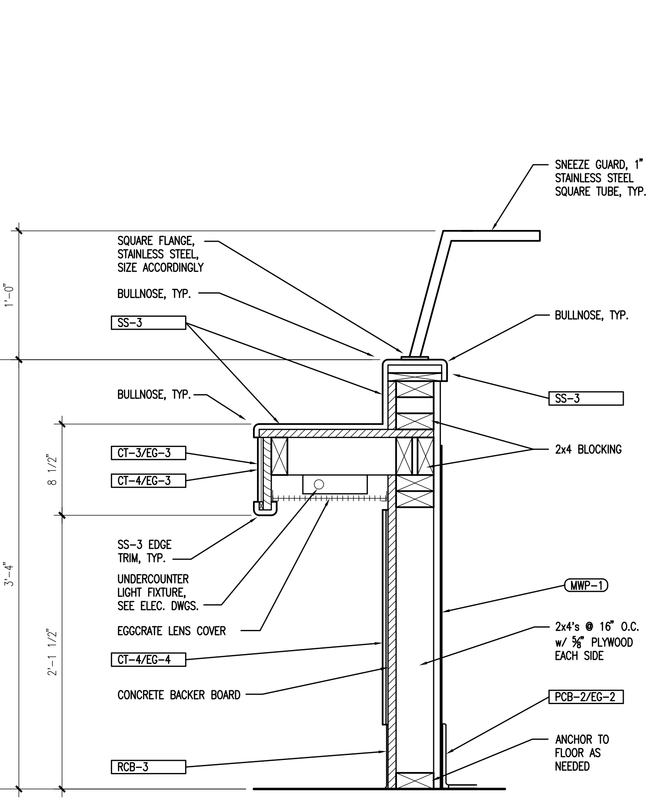

CHARLEY'S GRILLED SUBS
PICK-UP COUNTER DETAIL
C / A7.5 SCALE: 1 1/2" = 1'-0"

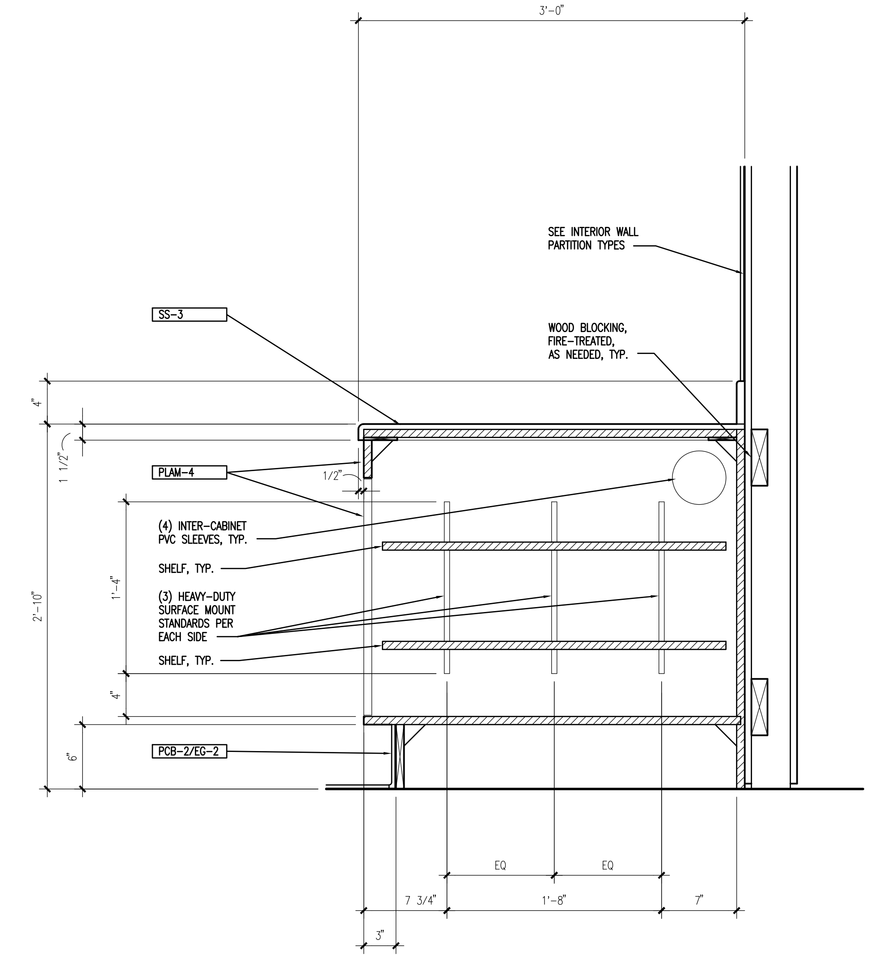

CHARLEY'S GRILLED SUBS
BACKWALL COUNTER DETAIL
D / A7.5 SCALE: 1 1/2" = 1'-0"

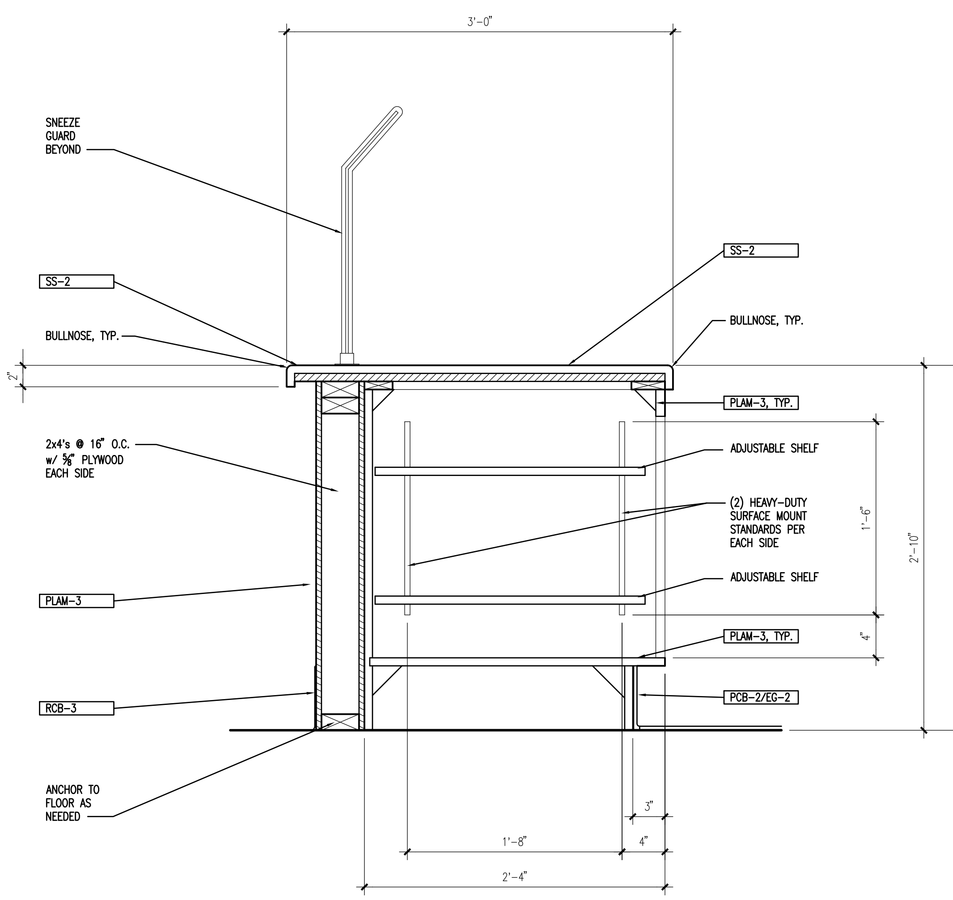

ANTHONY'S PIZZA
COUNTER DETAIL
E / A7.5 SCALE: 1 1/2" = 1'-0"

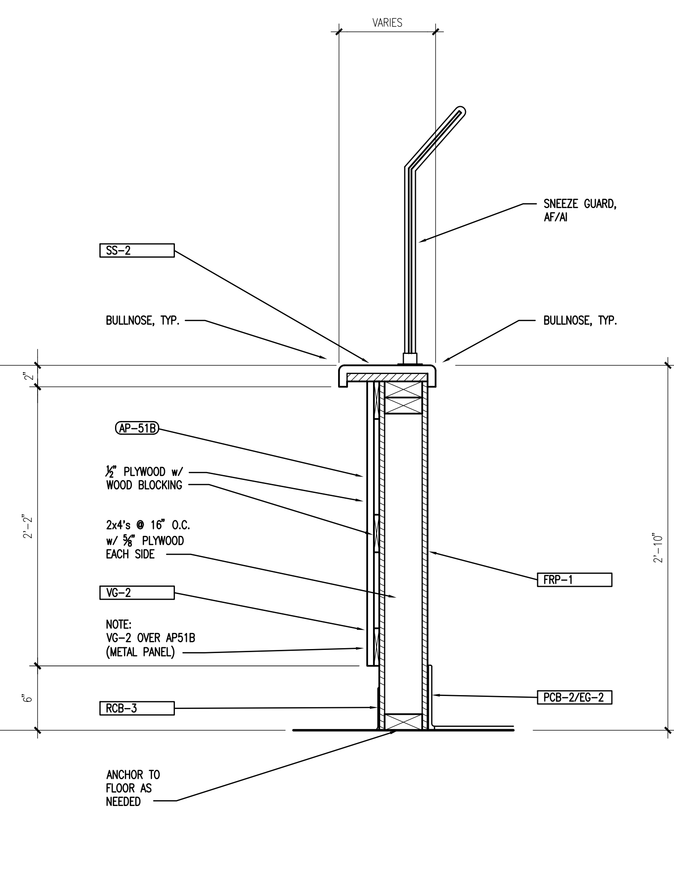

ANTHONY'S PIZZA
COUNTER DETAIL
F / A7.5 SCALE: 1 1/2" = 1'-0"

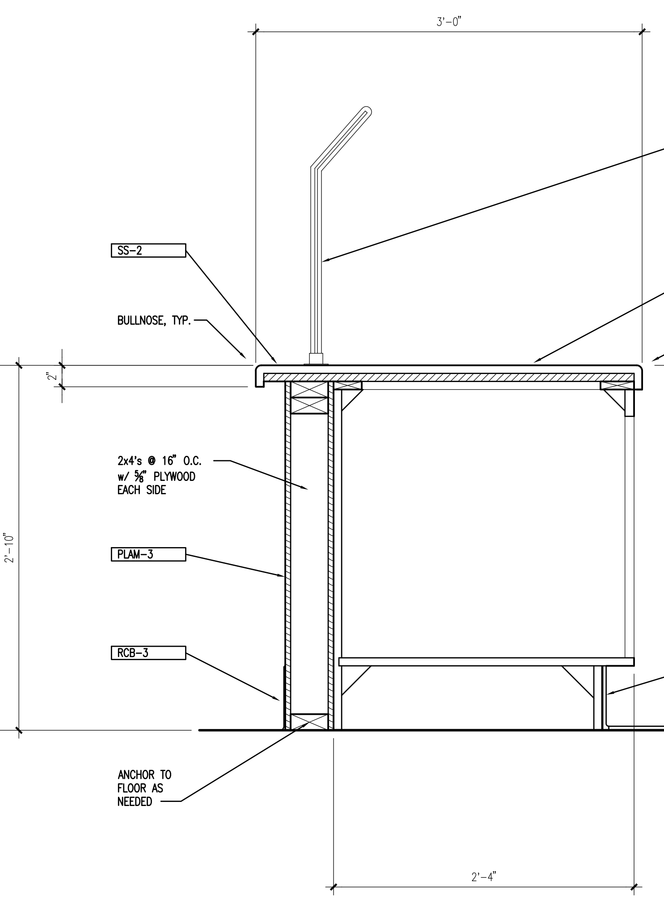

ANTHONY'S PIZZA
COUNTER DETAIL
G / A7.5 SCALE: 1 1/2" = 1'-0"

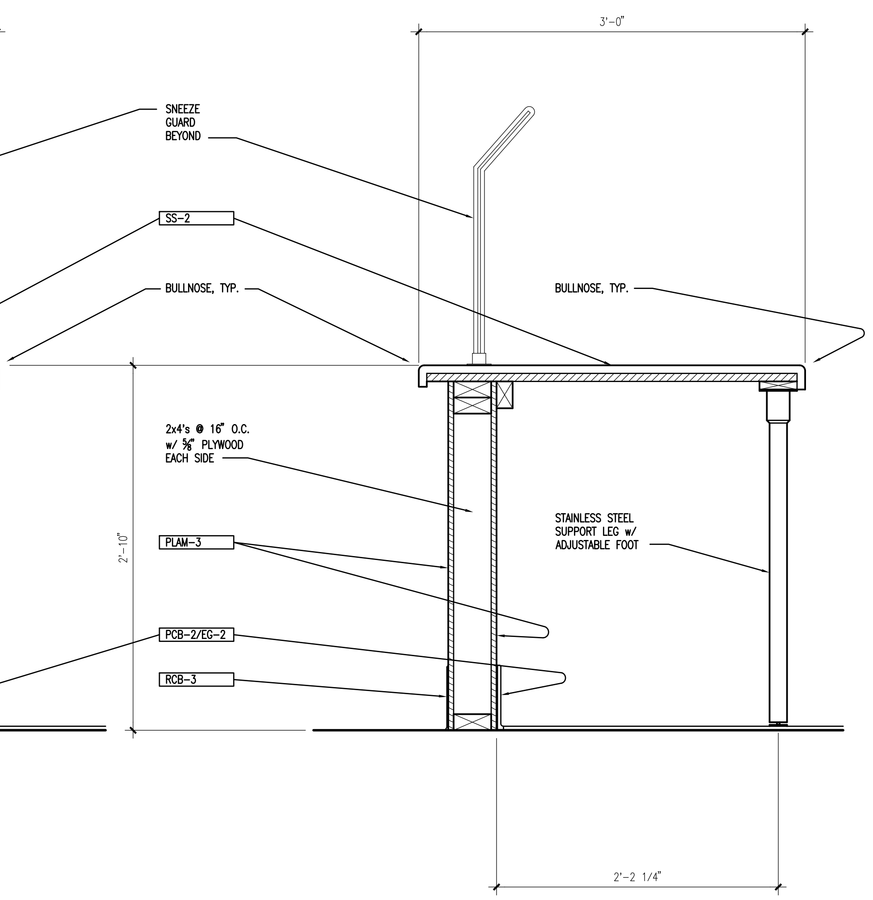

ANTHONY'S PIZZA
COUNTER DETAIL
H / A7.5 SCALE: 1 1/2" = 1'-0"

DATES AND REVISIONS

No.	Date/Description
	04.11.12 – BID

EXCHANGE™

RICHARD L. BOWEN + ASSOCIATES INC.
13000 Shaker Boulevard / Cleveland, Ohio 44120
Phone: (216) 491-9300 Fax: (216) 491-9053
www.rlba.com - email@rlba.com

FT. MYER EXCHANGE
JBMHH - MYER
ARLINGTON, VIRGINIA

MILLWORK DETAILS

DRAWN BY: RTV
CHECKED BY: ---
RLB NO.: 7800.02

DRAWING NO.
A7.5

P:\7800\7800.02 FT. MYER PX IMAGE UPGRADE CONST. CONTRACT DOCS\ARCH\780002_A07-05.DWG | PLOTTED 04.09.2012 09:17AM BY ANDREW HENLEY

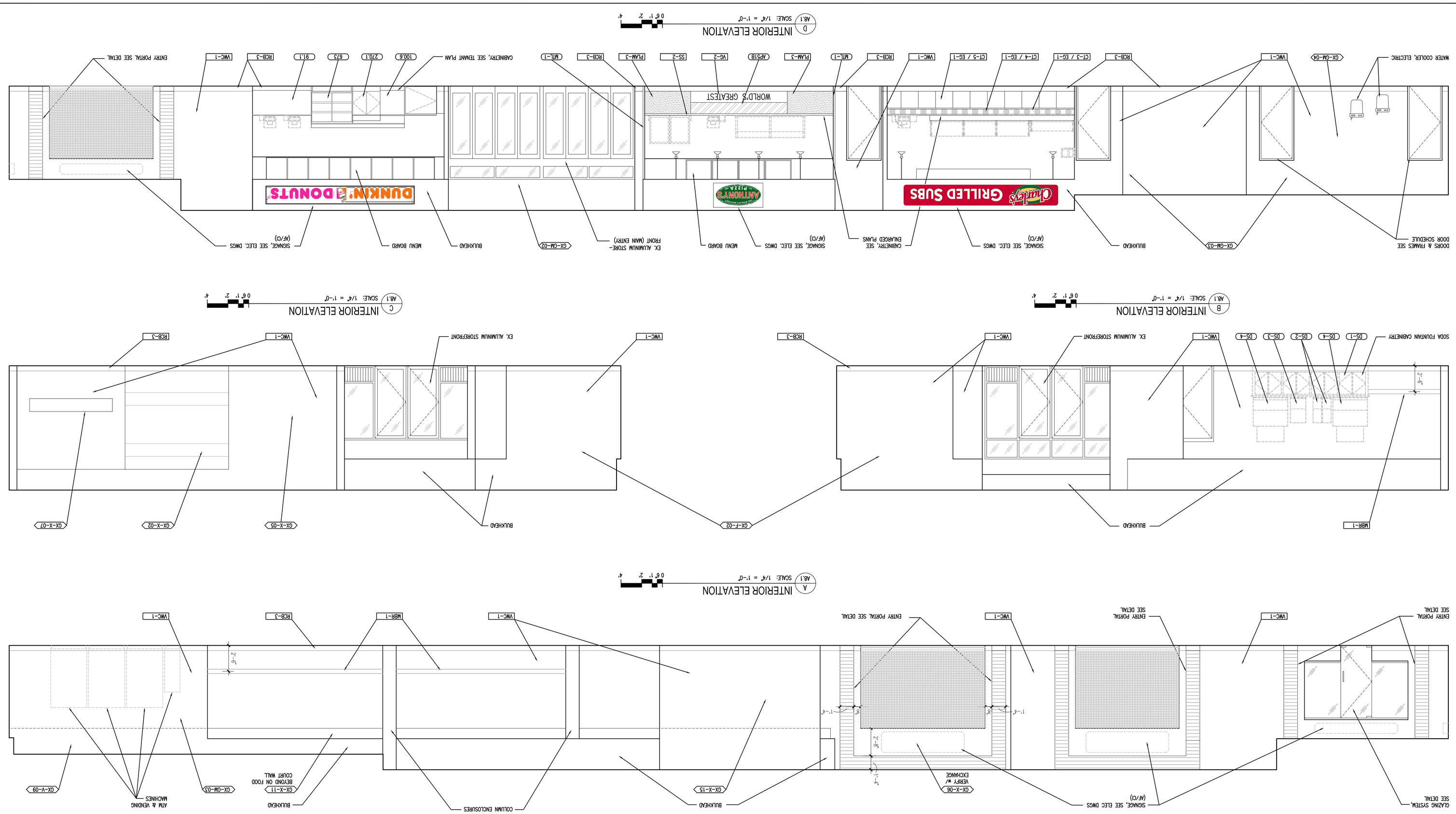

FT. MYER EXCHANGE

JBMHH - MYER
ARLINGTON, VIRGINIA

INTERIOR ELEVATIONS

DRAWN BY: RIV
CHECKED BY: -
RLB NO.: 7800.02

DRAWING NO. A8.1

RICHARD L. BOWEN + ASSOCIATES INC.
13000 Shaker Boulevard / Cleveland, Ohio 44120
Phone: (216) 491-8000 Fax: (216) 491-8003
www.rlba.com - email@rlba.com

© CONSULTANTS • ARCHITECTS • ENGINEERS • MANAGERS

EXCHANGE™

DATES AND REVISIONS

No.	Date/Description
	04.11.12 - BID

P:\7800\7800.02 FT. MYER PX IMAGE UPGRADE CONST. CONTRACT DOCS\ARCH\7800002_A08-01.DWG | PLOTTED 04.09.2012 09:46AM BY ANDREW HENLEY

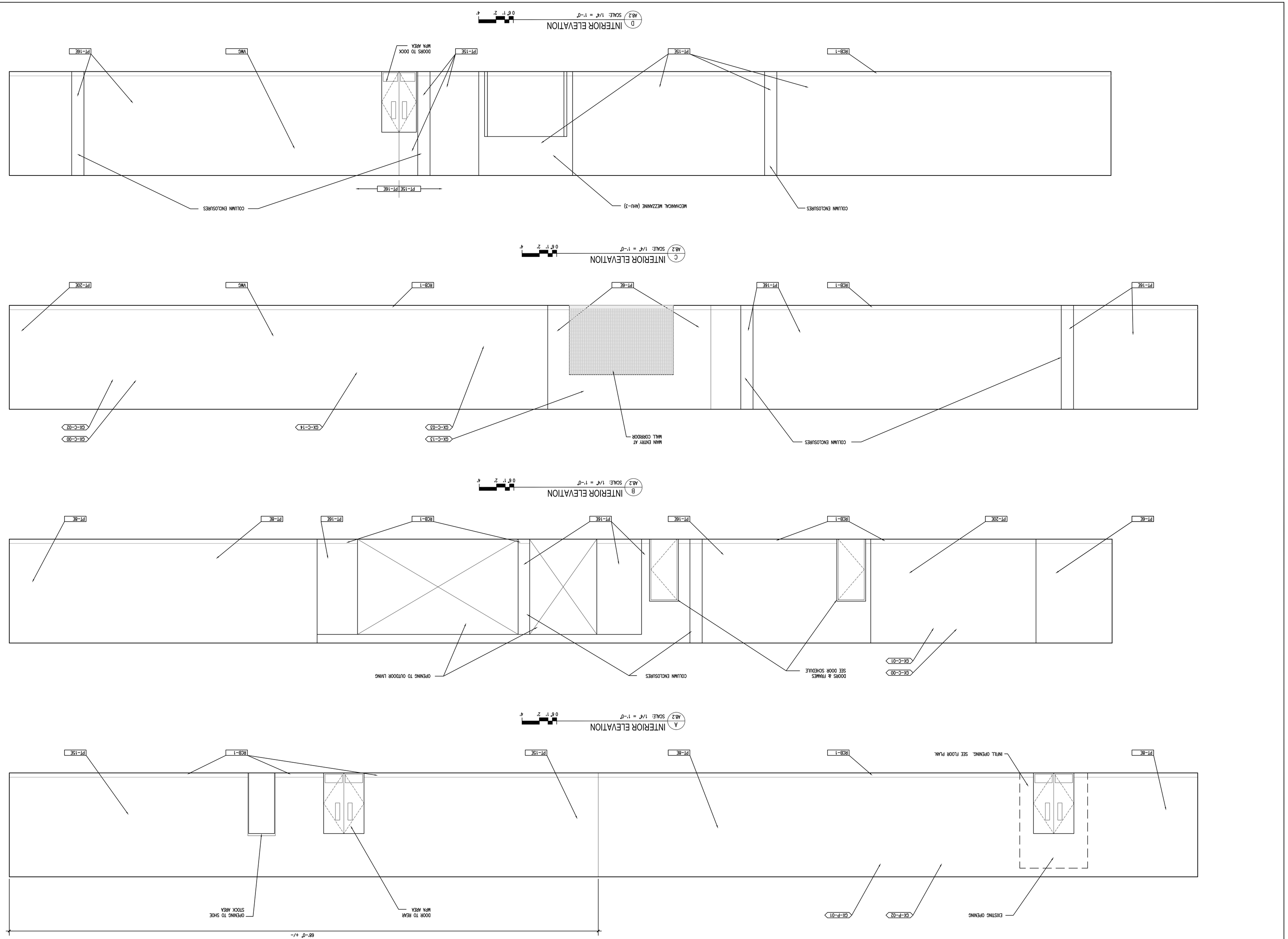

P:\7800\7800.02 FT. MYER PX IMAGE UPGRADE CONST. CONTRACT DOCS\ARCH\780002_A08-02.DWG | PLOTTED 04.26.2012 03:33PM BY RYAN VANJO

DATES AND REVISIONS

No.	Date/Description
	04.11.12 - BID

EXCHANGE™

RICHARD L. BOWEN + ASSOCIATES INC.
CONSULTANTS • ARCHITECTS • ENGINEERS • MANAGERS
13000 Shaker Boulevard / Cleveland, Ohio 44120
Phone: (216) 491-8000 Fax: (216) 491-8053
www.rlba.com - email@rlba.com

FT. MYER EXCHANGE
JBMHH - MYER
ARLINGTON, VIRGINIA

INTERIOR ELEVATIONS: SALES FLOOR

DRAWN BY: RIV
CHECKED BY: -
RLB NO.: 7800.02

DRAWING NO. A8.2

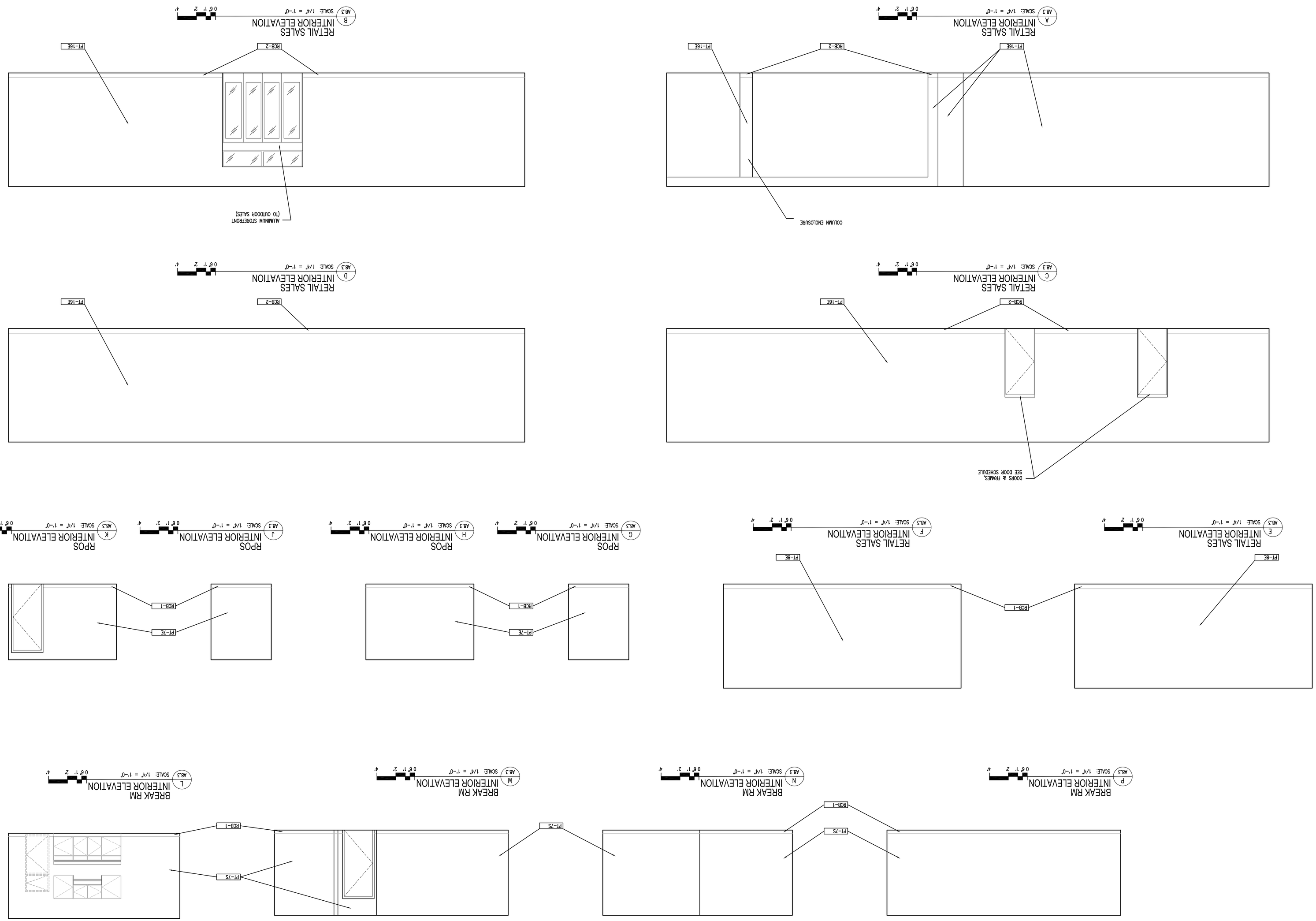

P:\7800\7800.02 FT. MYER PX IMAGE UPGRADE CONST. CONTRACT DOCS\ARCH\7800.02_A08-03.DWG | PLOTTED 04.09.2012 09:49AM BY ANDREW HENLEY

A8.3
DRAWING NO.

RLB NO.: 7800.02
CHECKED BY: -
DRAWN BY: RIV

FT. MYER EXCHANGE
JBMHH - MYER
ARLINGTON, VIRGINIA
INTERIOR ELEVATIONS
SALES AREA

RICHARD L. BOWEN
+ ASSOCIATES INC.
13000 Shaker Boulevard / Cleveland, Ohio 44120
Phone: (216) 491-0000 Fax: (216) 491-8053
www.rlba.com - email@rlba.com

© ARCHITECTS • ENGINEERS • MANAGERS • CONSTRUCTION

EXCHANGE™

DATES AND REVISIONS

No.	Date/Description
	04.11.12 - BID

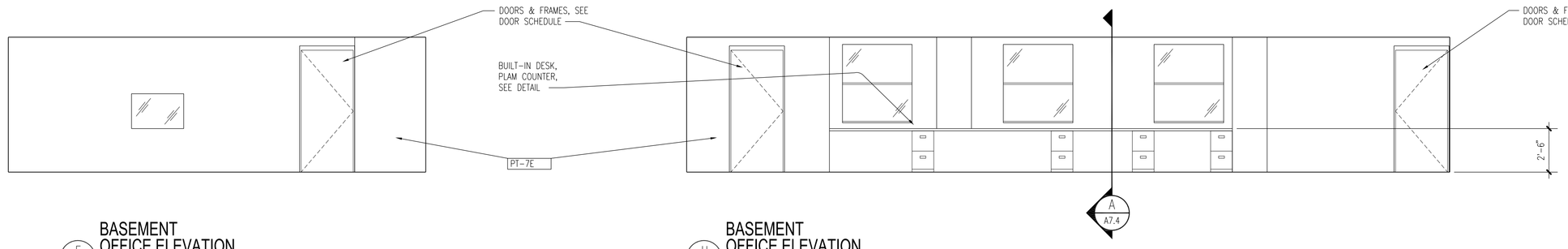

E A8.4 BASEMENT OFFICE ELEVATION
SCALE: 1/4" = 1'-0"

H A8.4 BASEMENT OFFICE ELEVATION
SCALE: 1/4" = 1'-0"

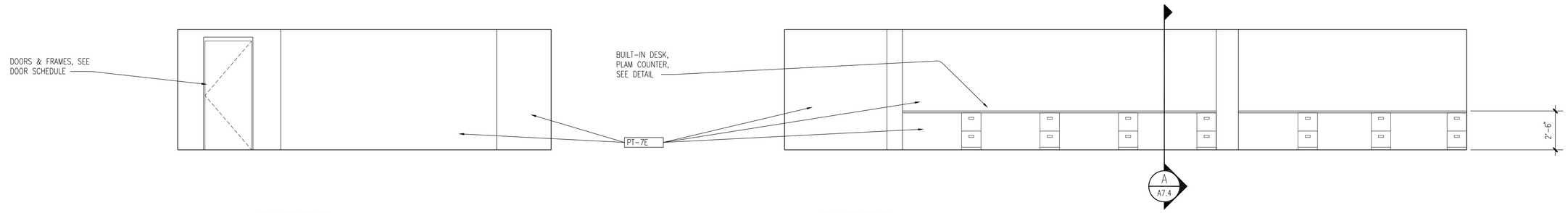

G A8.4 BASEMENT OFFICE ELEVATION
SCALE: 1/4" = 1'-0"

F A8.4 BASEMENT OFFICE ELEVATION
SCALE: 1/4" = 1'-0"

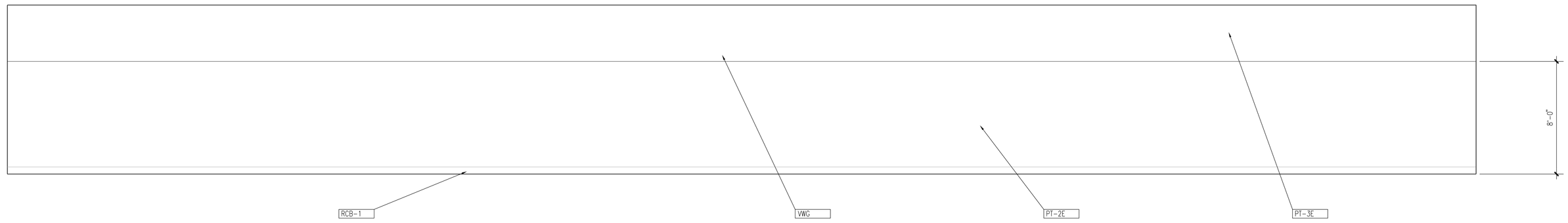

D A8.4 BID OPTION #2
MCSS INTERIOR ELEVATION
SCALE: 1/4" = 1'-0"

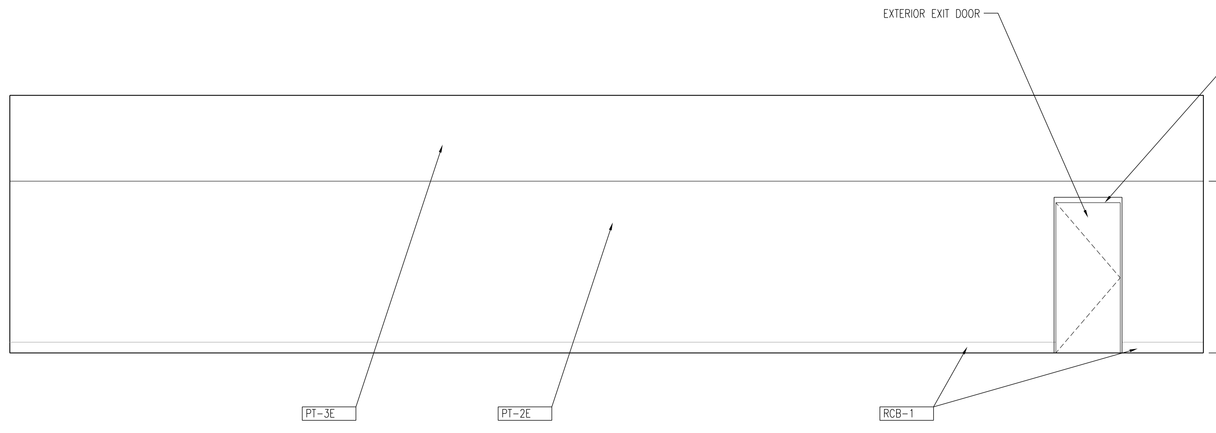

B A8.4 BID OPTION #2
MCSS INTERIOR ELEVATION
SCALE: 1/4" = 1'-0"

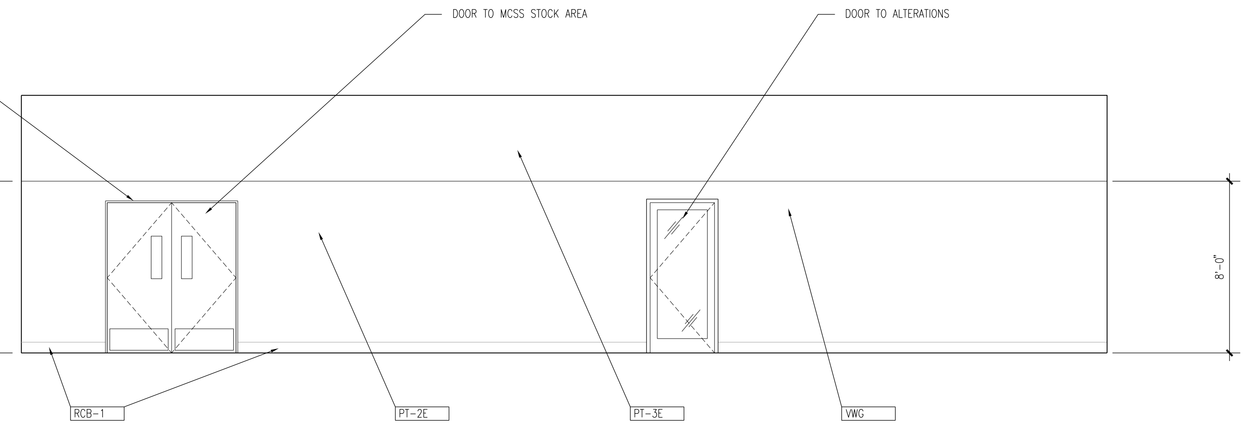

C A8.4 BID OPTION #2
MCSS INTERIOR ELEVATION
SCALE: 1/4" = 1'-0"

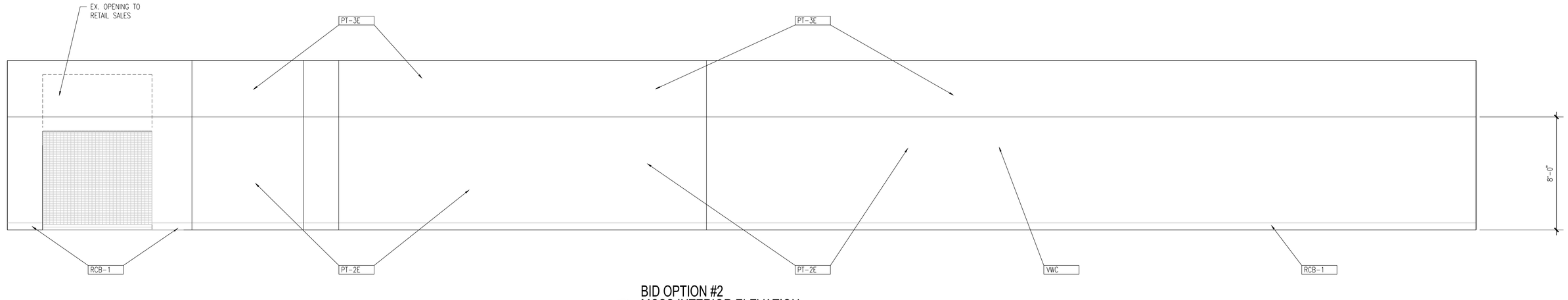

A A8.4 BID OPTION #2
MCSS INTERIOR ELEVATION
SCALE: 1/4" = 1'-0"

DATES AND REVISIONS

No.	Date/Description
	04.11.12 – BID

EXCHANGE™

RICHARD L. BOWEN + ASSOCIATES INC.
13000 Shaker Boulevard / Cleveland, Ohio 44120
Phone: (216) 491-9300 Fax: (216) 491-9053
www.rlba.com - email@rlba.com

FT. MYER EXCHANGE
JBMHH - MYER
ARLINGTON, VIRGINIA

INTERIOR ELEVATIONS

DRAWN BY: RTV
CHECKED BY: --
RLB NO.: 7800.02

DRAWING NO.
A8.4

P:\7800\7800.02 FT. MYER PX IMAGE UPGRADE CONST. CONTRACT DOCS\ARCH\780202_A08-04.DWG | PLOTTED 04-26-2012 03:35PM BY RYAN VANJO

BID OPTION #2 AREA

GENERAL SHEET NOTES:

A. THIS SHEET IS TO DEMONSTRATE OVERALL SCOPE OF NEW WORK.

B. REFER TO ENLARGED CEILING PLANS FOR FURTHER INFORMATION.

AREA "C"

MATCH LINE

MATCH LINE

NEW SUNSCREEN SYSTEM w/ LIGHT FIXTURES & IRRIGATION SYSTEM

AREA "B"

MATCH LINE

MATCH LINE

AREA "A"

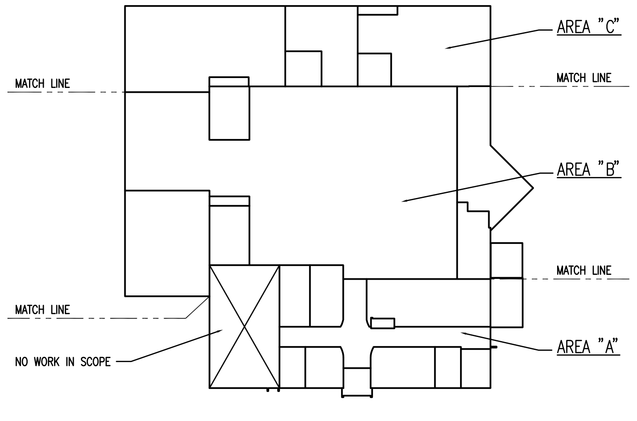

KEY PLAN

SCALE: NTS

TRUE NORTH

1 / A9.0 OVERALL FLOOR PLAN

SCALE: 3/32" = 1'-0"

0 2' 4' 8' 16'

DATES AND REVISIONS	
No.	Date/Description
	04.11.12 – BID

EXCHANGE™

RICHARD L. BOWEN + ASSOCIATES INC.

13000 Shaker Boulevard / Cleveland, Ohio 44120
Phone: (216) 491-5300 Fax: (216) 491-8053
www.rlba.com - email@rlba.com

FT. MYER EXCHANGE
JBMHH - MYER
ARLINGTON, VIRGINIA

OVERALL REFLECTED CEILING PLAN

DRAWN BY: RTV

CHECKED BY: --

RLB NO.: 7800.02

DRAWING NO.

A9.0

P:\7800\7800.02 FT. MYER PX IMAGE UPGRADE CONST. CONTRACT DOCS\ARCH\780002_A09-00.DWG | PLOTTED 04.09.2012 09:52AM BY ANDREW HENLEY

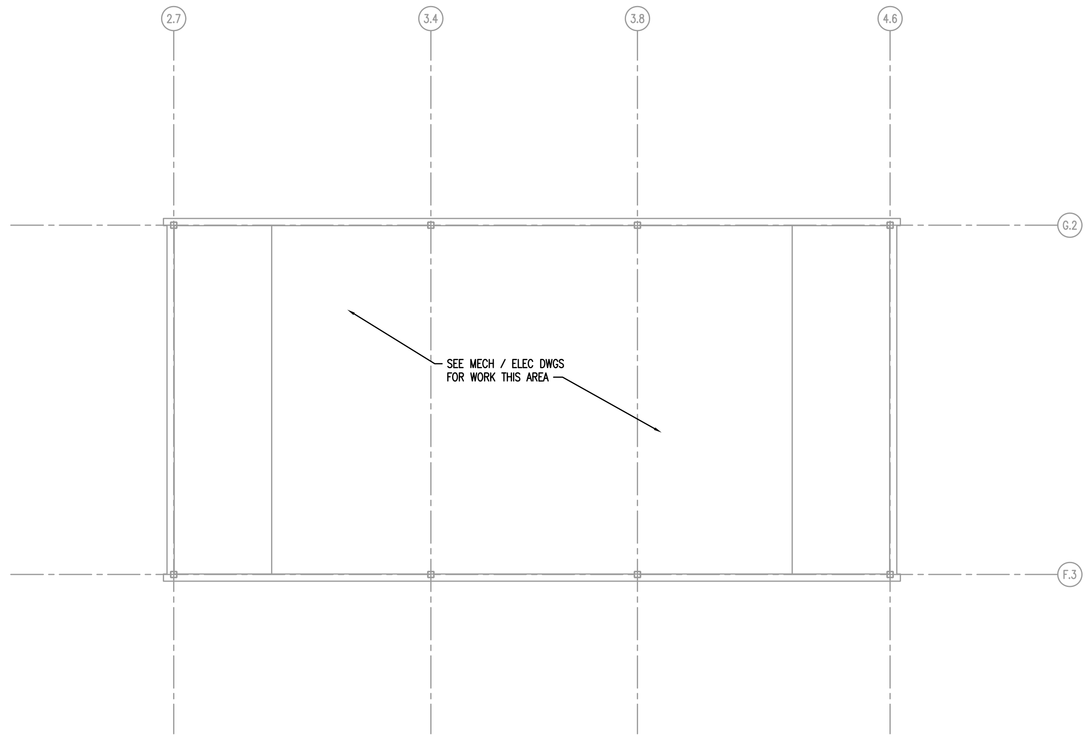

2 A9.1 MECHANICAL PENTHOUSE REFLECTED CEILING PLAN
SCALE: 1/8" = 1'-0"
0 1' 2' 4' 8'
N TRUE NORTH

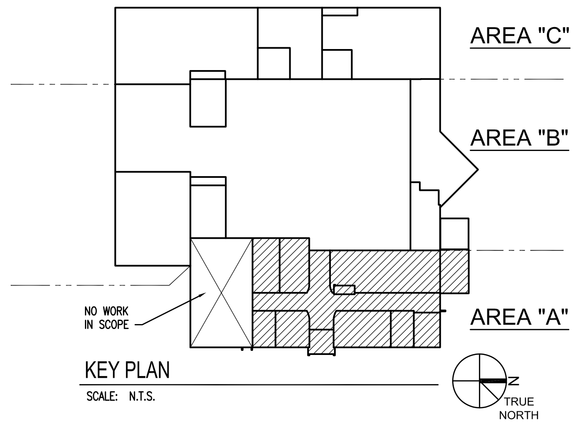

KEY PLAN
SCALE: N.T.S.

REFLECTED CEILING PLAN LEGEND:

- GYPSUM BOARD CEILING SEE DETAILS THIS SHEET FOR FRAMING.
- ACOUSTICAL CEILING TILE:
- EXIT SIGN / EMERGENCY LIGHT COMBO
- SUPPLY DIFFUSER
- RETURN AIR GRILLE
- EXHAUST FAN
- EMERGENCY LIGHT
- EXIT SIGN
- 2x4 RECESSED FLUORESCENT FIXTURE
- 1x4 SURFACE MOUNT FLUORESCENT FIXTURE
- FLUORESCENT WALL SCONCE FIXTURE
- 4' NARROW STRIP FLUORESCENT FIXTURE
- RECESSED DOWNLIGHT
- TRACK LIGHTING

CEILING PLAN GENERAL NOTES:

A. THE CONTRACTOR SHALL PROVIDE AND INSTALL ALL MATERIALS AND EQUIPMENT REQUIRED FOR A COMPLETE INSTALLATION PER ALL APPLICABLE CODES AND THESE DRAWINGS, UNLESS OTHERWISE NOTED.

B. CONTRACTOR SHALL PROVIDE AND INSTALL ALL MATERIALS NECESSARY TO PROVIDE A COMPLETE AND SERVICEABLE SUSPENDED CEILING SYSTEM.

C. AREAS WITHOUT GRID REFERENCE DIMENSIONS ASSUME 2' x 2' OR 2' x 4' GRID LAYOUT CENTERED WITHIN MAJOR DIMENSIONS OF ROOM AND ORIENTED AS SHOWN.

D. BULKHEADS SHALL EXTEND TO BOTTOM OF TRUSSES. SEE BULKHEAD DETAILS. SHEATHING SHALL EXTEND TO 6" (MIN.) ABOVE ADJACENT CEILING LINE. CONTRACTOR TO PROVIDE SUFFICIENT BRACING FOR SUPPORT OF BULKHEADS.

E. EXISTING LIGHT FIXTURES TO BE REUSED. SEE ELECTRICAL DRAWINGS.

F. SPRINKLER HEADS TO BE ADJUSTED PER NEW LAYOUT. SEE PLUMBING DRAWINGS FOR DESIGN CRITERIA AND SCOPE.

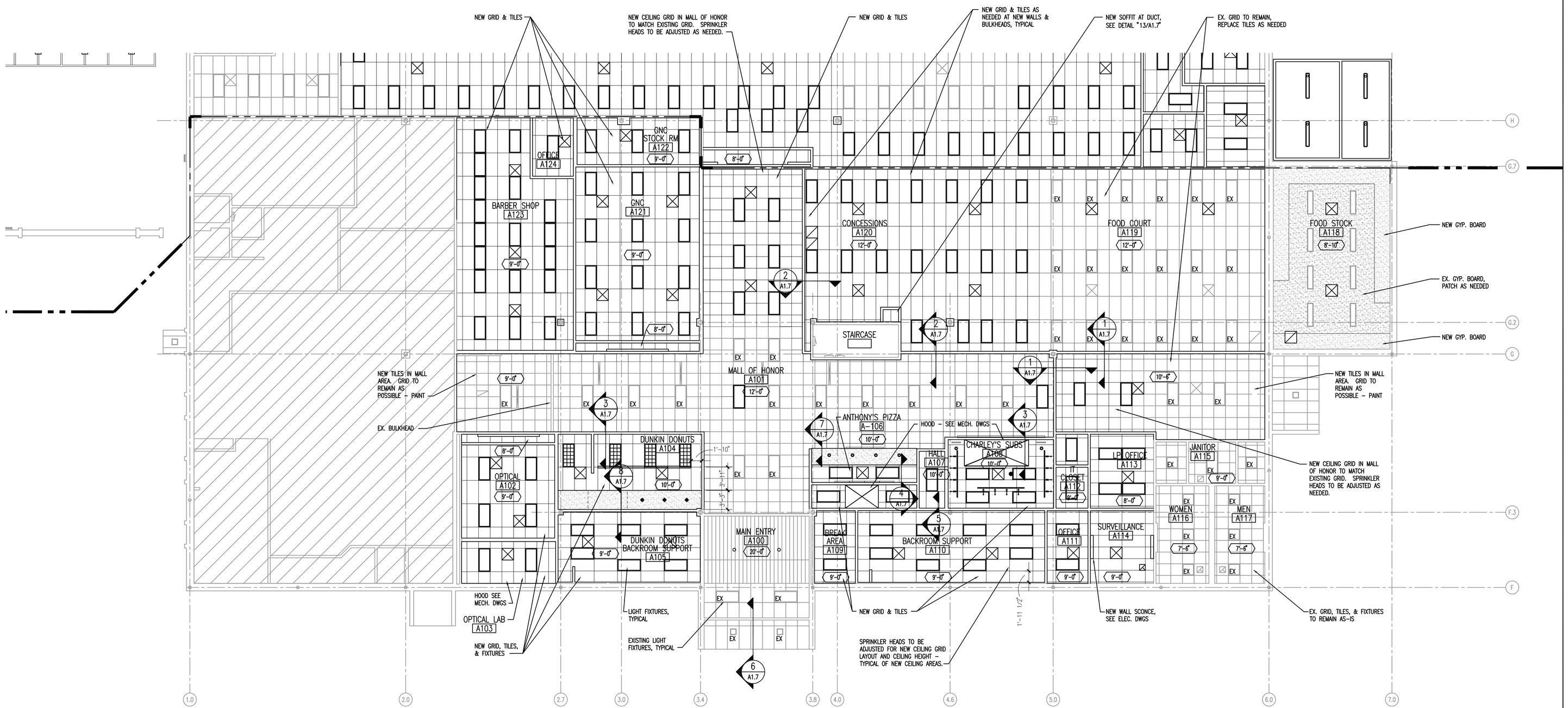

1 A9.1 ENLARGED MALL & FOOD COURT REFLECTED CEILING PLAN
SCALE: 1/8" = 1'-0"
0 1' 2' 4' 8'
N TRUE NORTH

AREA "A"

DATES AND REVISIONS	
No.	Date/Description
	04.11.12 – BID

EXCHANGE™

RICHARD L. BOWEN + ASSOCIATES INC.
13000 Shaker Boulevard / Cleveland, Ohio 44120
Phone: (216) 491-9300 Fax: (216) 491-9053
www.rlba.com - email@rlba.com

FT. MYER EXCHANGE
JBMHH - MYER
ARLINGTON, VIRGINIA
AREA "A"
REFLECTED CEILING PLAN

DRAWN BY: RTV
CHECKED BY: ---
RLB NO.: 7800.02
DRAWING NO. A9.1

P:\7800\7800.02 FT. MYER PX IMAGE UPGRADE CONST. CONTRACT DOCS\WORK\780002_A09-01.DWG | PLOTTED 04.09.2012 09:53AM BY ANDREW HENLEY

REFLECTED CEILING PLAN LEGEND:

- GYPSUM BOARD CEILING SEE DETAILS THIS SHEET FOR FRAMING.
- ACOUSTICAL CEILING TILE:
- EXIT SIGN / EMERGENCY LIGHT COMBO
- SUPPLY DIFFUSER
- RETURN AIR GRILLE
- EXHAUST FAN
- EMERGENCY LIGHT
- EXIT SIGN
- 2x4 RECESSED FLUORESCENT FIXTURE
- 1x4 SURFACE MOUNT FLUORESCENT FIXTURE
- FLUORESCENT WALL SCONCE FIXTURE
- 4' NARROW STRIP FLUORESCENT FIXTURE
- RECESSED DOWNLIGHT

CEILING PLAN GENERAL NOTES:

A. THE CONTRACTOR SHALL PROVIDE AND INSTALL ALL MATERIALS AND EQUIPMENT REQUIRED FOR A COMPLETE INSTALLATION PER ALL APPLICABLE CODES AND THESE DRAWINGS, UNLESS OTHERWISE NOTED.

B. CONTRACTOR SHALL PROVIDE AND INSTALL ALL MATERIALS NECESSARY TO PROVIDE A COMPLETE AND SERVICEABLE SUSPENDED CEILING SYSTEM.

C. AREAS WITHOUT GRID REFERENCE DIMENSIONS ASSUME 2' x 2' OR 2' x 4' GRID LAYOUT CENTERED WITHIN MAJOR DIMENSIONS OF ROOM AND ORIENTED AS SHOWN.

D. BULKHEADS SHALL EXTEND TO BOTTOM OF TRUSSES. SEE BULKHEAD DETAILS. SHEATHING SHALL EXTEND TO 6" (MIN.) ABOVE ADJACENT CEILING LINE. CONTRACTOR TO PROVIDE SUFFICIENT BRACING FOR SUPPORT OF BULKHEADS.

E. EXISTING LIGHT FIXTURES TO BE REUSED. SEE ELECTRICAL DRAWINGS.

F. SPRINKLER HEADS TO BE ADJUSTED PER NEW LAYOUT. SEE PLUMBING DRAWINGS FOR DESIGN CRITERIA AND SCOPE.

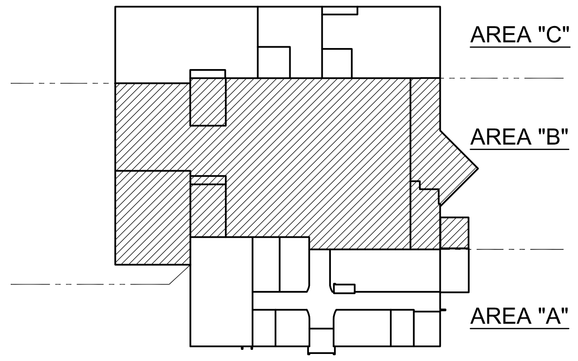

KEY PLAN
SCALE: N.T.S.

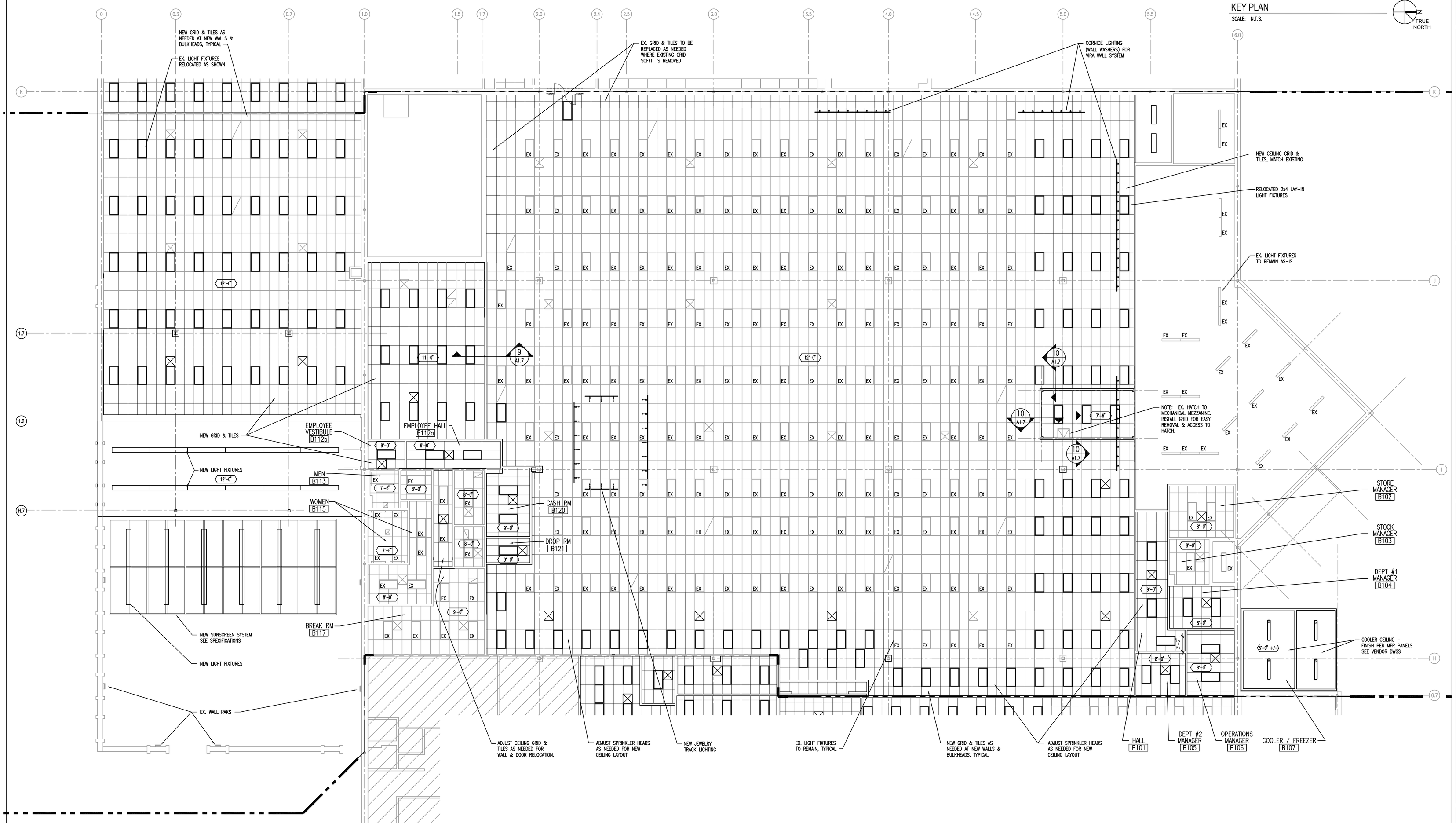

1 A9.2 ENLARGED RETAIL SALES AREA REFLECTED CEILING PLAN
SCALE: 1/8" = 1'-0"

AREA "B"

DATES AND REVISIONS	
No.	Date/Description
	04.11.12 – BID

EXCHANGE™

RICHARD L. BOWEN + ASSOCIATES INC.
13000 Shaker Boulevard / Cleveland, Ohio 44120
Phone: (216) 491-5800 Fax: (216) 491-5053
www.rlba.com - email@rlba.com

FT. MYER EXCHANGE
JBMHH - MYER
ARLINGTON, VIRGINIA
AREA "B"
REFLECTED CEILING PLAN

DRAWN BY: RTV
CHECKED BY: --
RLB NO.: 7800.02

DRAWING NO. A9.2

P:\7800\7800.02 FT. MYER PX IMAGE UPGRADE CONST. CONTRACT DOCS\ARCH\780002_A09-02.DWG | PLOTTED 04.26.2012 03:50PM BY RYAN VANJO

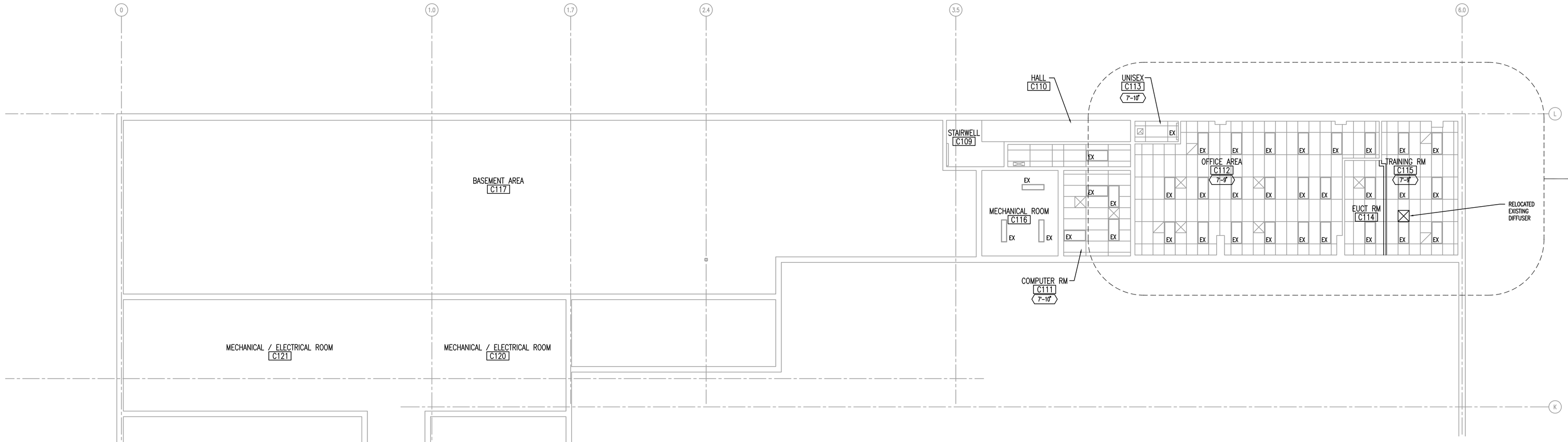

REFLECTED CEILING PLAN LEGEND:

- GYPSUM BOARD CEILING SEE DETAILS THIS SHEET FOR FRAMING.
- ACOUSTICAL CEILING TILE:
- EXIT SIGN / EMERGENCY LIGHT COMBO
- SUPPLY DIFFUSER
- RETURN AIR GRILLE
- EXHAUST FAN
- EMERGENCY LIGHT
- EXIT SIGN
- 2x4 RECESSED FLUORESCENT FIXTURE
- 1x4 SURFACE MOUNT FLUORESCENT FIXTURE
- FLUORESCENT WALL SCONCE FIXTURE
- 4' NARROW STRIP FLUORESCENT FIXTURE
- RECESSED DOWNLIGHT

2 / A9.3 BASEMENT REFLECTED CEILING PLAN
SCALE: 1/8" = 1'-0"

CEILING PLAN GENERAL NOTES:

A. THE CONTRACTOR SHALL PROVIDE AND INSTALL ALL MATERIALS AND EQUIPMENT REQUIRED FOR A COMPLETE INSTALLATION PER ALL APPLICABLE CODES AND THESE DRAWINGS, UNLESS OTHERWISE NOTED.

B. CONTRACTOR SHALL PROVIDE AND INSTALL ALL MATERIALS NECESSARY TO PROVIDE A COMPLETE AND SERVICEABLE SUSPENDED CEILING SYSTEM.

C. AREAS WITHOUT GRID REFERENCE DIMENSIONS ASSUME 2' x 2' OR 2' x 4' GRID LAYOUT CENTERED WITHIN MAJOR DIMENSIONS OF ROOM AND ORIENTED AS SHOWN.

D. BULKHEADS SHALL EXTEND TO BOTTOM OF TRUSSES. SEE BULKHEAD DETAILS. SHEATHING SHALL EXTEND TO 6" (MIN.) ABOVE ADJACENT CEILING LINE. CONTRACTOR TO PROVIDE SUFFICIENT BRACING FOR SUPPORT OF BULKHEADS.

E. EXISTING LIGHT FIXTURES TO BE REUSED. SEE ELECTRICAL DRAWINGS.

F. SPRINKLER HEADS TO BE ADJUSTED PER NEW LAYOUT. SEE PLUMBING DRAWINGS FOR DESIGN CRITERIA AND SCOPE.

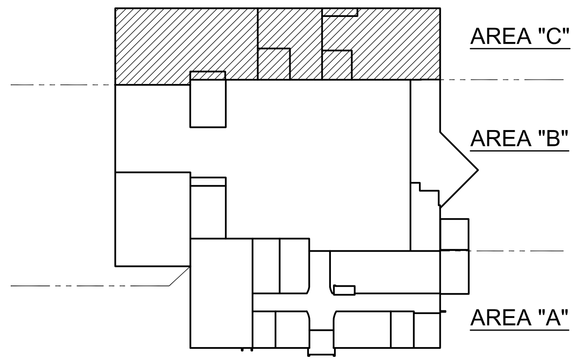

KEY PLAN
SCALE: N.T.S.

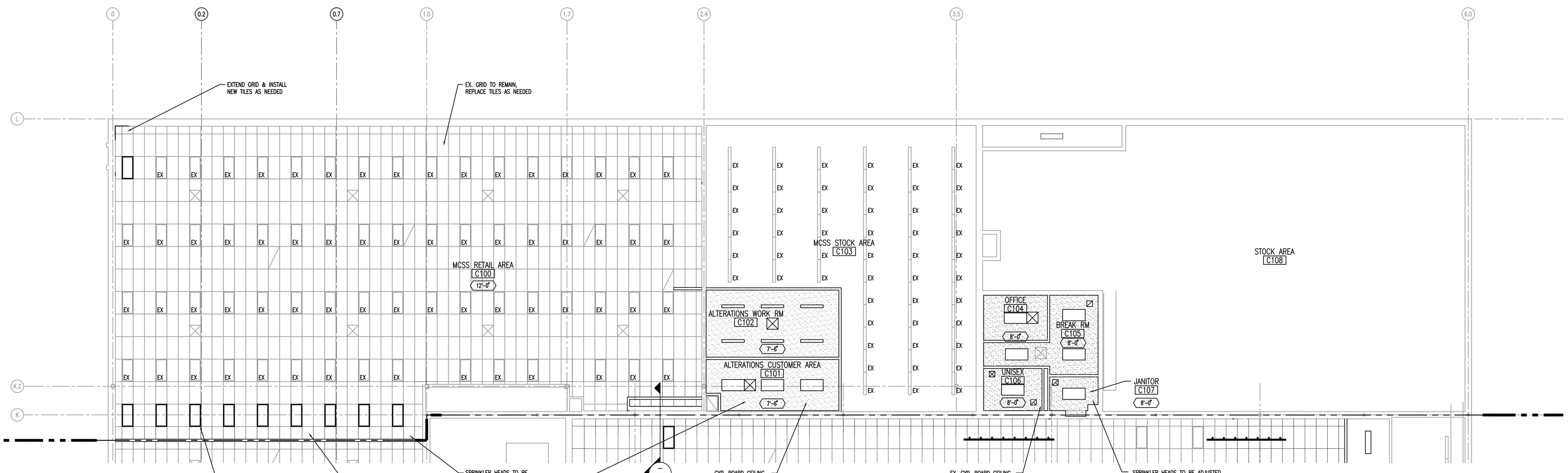

1 / A9.3 BID OPTION #2
ENLARGED MCSS & MPA REFLECTED CEILING PLAN
SCALE: 1/8" = 1'-0"

AREA "C"

DATES AND REVISIONS	
No.	Date/Description
	04.11.12 – BID

EXCHANGE™

RICHARD L. BOWEN + ASSOCIATES INC.
ARCHITECTS • ENGINEERS • MANAGERS • CONSTRUCTION
13000 Shaker Boulevard / Cleveland, Ohio 44120
Phone: (216) 491-8300 Fax: (216) 491-8053
www.rlba.com • email@rlba.com

FT. MYER EXCHANGE
JBMHH - MYER
ARLINGTON, VIRGINIA
AREA "C"
REFLECTED CEILING PLAN

DRAWN BY: RTV
CHECKED BY: --
RLB NO.: 7800.02

DRAWING NO.
A9.3

P:\7800\7800.02 FT. MYER PX IMAGE UPGRADE CONST. CONTRACT DOCS\ARCH\7800D2_A09-03.DWG | PLOTTED 04.09.2012 09:54AM BY ANDREW HENLEY

KEY PLAN
SCALE: NTS

1 EQ1.0 OVERALL FLOOR PLAN
SCALE: 3/32" = 1'-0"

0 2' 4' 8' 16'

TRUE NORTH

DATES AND REVISIONS	
No.	Date/Description
	04.11.12 – BID

EXCHANGE™

RICHARD L. BOWEN + ASSOCIATES INC.
13000 Shaker Boulevard / Cleveland, Ohio 44120
Phone: (216) 491-9300 Fax: (216) 491-9053
www.rlba.com - email@rlba.com

FT. MYER EXCHANGE
JBMHH - MYER
ARLINGTON, VIRGINIA

FURNITURE / EQUIPMENT PLAN

DRAWN BY: RTV
CHECKED BY: --
RLB NO.: 7800.02

DRAWING NO.
EQ1.0

P:\7800\7800.02 FT. MYER PX IMAGE UPGRADE CONST. CONTRACT DOCS\WORK\780002_EQ01-000.DWG | PLOTTED 04.26.2012 03:51PM BY RYAN VANJO

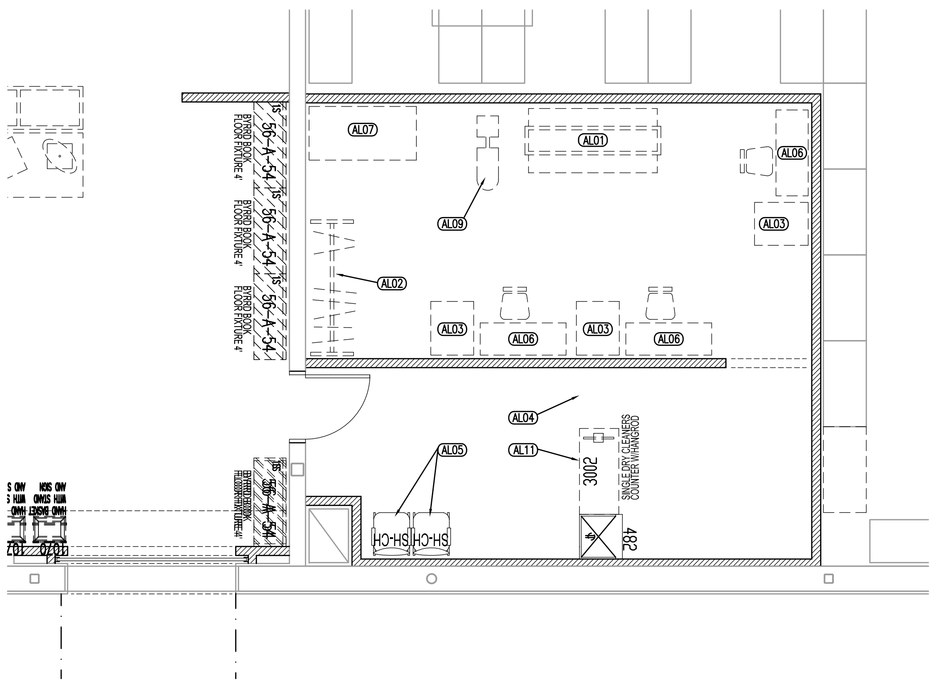
AL07
AL01
AL06
AL09
AL03
AL02
AL03
AL08
AL03
AL06
AL04
AL11
AL05
3002
SINGLE BOWL CLEANERS COUNTER W/HANGERS
402
SH-CH
SH-CH
56-1-54
ROOM NOLINE
ROOM NOLINE
ROOM NOLINE

ANTHONY'S PIZZA EQUIPMENT SCHEDULE

ITEMS FURNISHED / INSTALLED AS FOLLOWS:
AF -- AAFES FURNISHED
AI -- AAFES INSTALLED
CF -- CONTRACTOR FURNISHED
CI -- CONTRACTOR INSTALLED

SCHEDULE NOTE:
CONTRACTOR TO VERIFY ALL UTILITY REQUIREMENTS, INSTALL ROUGH-INS, & MAKE FINAL CONNECTIONS.

ITEM NO.	QUANTITY	DESCRIPTION	MANUFACTURER	MODEL NUMBER	FURNISHED BY:	INSTALLED BY:	ELECTRICAL VOLTS	PHASE	AMPS	PLUMBING / MECHANICAL WATER	DRAIN	GAS	BTU's	REMARKS
AP01	1	WORK TABLE 36" LENGTH	EAGLE GROUP	DELUXE: T3036STEB-BS w/ ADJUSTABLE FEET	AF	AI								NO UNDER SHELF, 36"W x 30"D x 34.5"H
AP02	2	WORK TABLE 30" LENGTH	EAGLE GROUP	DELUXE: T3030STEB-BS w/ ADJUSTABLE FEET	AF	AI								NO UNDER SHELF, 30"W x 30"D x 34.5"H
AP03	1	WORK TABLE 30" LENGTH w/ UNDER SHELF	EAGLE GROUP	DELUXE: T3030SEB-BS w/ ADJUSTABLE FEET	AF	AI								WITH UNDER SHELF, 30"W x 30"D x 34.5"H
AP04	1	FOOD WARMER	SERVER PRODUCTS	FS-4 #8100	AF	AI	SEE ELECTRICAL DWGS							7.75"W x 8.125"D x 19.375"H
AP05	1	PIZZA DOUGH PRESS AUTOMATIC	SOMERSET PIZZA	SDP-747	AF	AI	SEE ELECTRICAL DWGS							20.375"W x 25"D x 25.625"H
AP06	1	EXHAUST HOOD & FAN	---	---	CF	CI				SEE MECHANICAL DWGS				70.75"W
AP07	1	DIGITAL MENU BOARD	SMARTERSIGN	MAINSTREET-222-02-100r3	AF	AI	SEE ELECTRICAL DWGS							147.5"W x 30.5"H
AP08	1	OVEN CONVEYOR DOUBLE	MIDDLEBY MARSHALL	PS624-2WOW	AF	AI	SEE ELECTRICAL DWGS							60.75"W x 40"D x 59.5"H
AP09	2	UNDER-COUNTER REFRIGERATOR	SILVER KING	SKTTR7	AF	AI	SEE ELECTRICAL DWGS							27"W
AP10	2	DOUGH DOLLY BASKETS	QUADRA TECH	DOLLYPD	AF	AI								
AP10A	16	BASKETS FOR DOLLY DOUGH	QUADRA TECH	BSKTPD	AF	AI								
AP11	1	PIZZA MAKE UP TABLE	RANDELL	8268N	AF	AI	SEE ELECTRICAL DWGS							68"W x 17.7"D, 9 CF
AP12	1	P.O.S. CASH REGISTER w/ DRAWER	MICROS/APG	ECLIPSE 422495-300 SERIES	AF	AI	SEE ELECTRICAL DWGS							
AP12A	1	RECEIPT PRINTER	EPSON	TM-H600011	AF	AI								7.3"W x 11.7"D x 7.3"H
AP13	1	3-CUP AAFES MOBILE DISPENSER	TRI-MARK	360125 w/ CASTERS	AF	AI								8.125"W x 24.125"D x 26.125"H, LISA WOOD #816-746-5077 (O)
AP15	1	CUTTING BOARD	---	SMALLWARE PACKAGE	AF	AI								24"W x 18"D
AP16	1	SHELVING	---	---	AF	AI								18"X30" SHELVING UNIT
AP17	2	DISPLAY CASE HEATED	HATCO	FSDT-1 5 TIER RACK FSDT5TCR	AF	AI	SEE ELECTRICAL DWGS							30"W x 18"D
AP18	1	SHELVING	---	---	AF	AI								18"X30" SHELVING UNIT
AP19	1	ACTIVITY SIGN	STARLIGHT SIGN	ANTHONY'S PIZZA	AF	AI								PROVIDE SOLID PLYWOOD BACKING FOR SIGN MOUNTING
AP20	1	SNEEZE GUARD	WIZARD GLASS & METAL SPECIALTIES	SERIES 100-82	AF	AI								82"W x 10.125"D x 26.125"H, 39" C/L TO C/L OF POSTS
AP50	1	QUILTED S.S. WALL PANEL	TRI-MARK	CUSTOM	AF	AI								96"W x 80"D, LISA WOOD #816-746-5077 (O)
AP51	1	STAINLESS STEEL WALL PANEL	TRI-MARK	CUSTOM	AF	AI								LISA WOOD #816-746-5077 (O)
AP51A	1	STAINLESS STEEL WALL PANEL	TRI-MARK	CUSTOM	AF	AI								LISA WOOD #816-746-5077 (O)
AP51B	1	STAINLESS STEEL WALL PANEL	TRI-MARK	CUSTOM	AF	AI								FRONT COUNTER BOW PANEL - LISA WOOD #816-746-5077 (O)
AP52	1	HOLDING CABINET DRAWER TYPE	WINSTON INDUSTRIES	HB35N2	AF	AI	SEE ELECTRICAL DWGS							16.2"W x 30.2"D x 24.3"H
AP60	4	PENDANT LIGHT FIXTURES	SEAGULL	6519-21	AF	CI	SEE ELECTRICAL DWGS							
MTL-2	1	CUSTOM METAL STOREFRONT PORTAL	MOZ DESIGNS	RADIANCE COLLECTION - ELCTRIC RED / FOG PATTERN	CF	CI								30"W, ONSITE FABRICATION - SCRIBE TO FRONT COUNTER, USE MFR RECOMMENDED CORNERS & TRIM PIECES
SWP	1	SMALLWARE PACKAGE	WASSERTROM	CUT SHEET - NOT AVAILABLE	AF	AI								
UV04	1	STANCHIONS	LAVI INDUSTRIES	3000WB/BK; 7 POSTS	AF	AI								

DUNKIN DONUTS EQUIPMENT SCHEDULE

ITEMS FURNISHED / INSTALLED AS FOLLOWS:
DF -- DUNKIN' BRANDS FURNISHED
DI -- DUNKIN' BRANDS INSTALLED
CF -- CONTRACTOR FURNISHED
CI -- CONTRACTOR INSTALLED

SCHEDULE NOTE:
CONTRACTOR TO VERIFY ALL UTILITY REQUIREMENTS, INSTALL ROUGH-INS, & MAKE FINAL CONNECTIONS.

ITEM NO.	QUANTITY	DESCRIPTION	MANUFACTURER	MODEL NUMBER	FURNISHED BY:	INSTALLED BY:	ELECTRICAL VOLTS	PHASE	AMPS	PLUMBING / MECHANICAL WATER	DRAIN	GAS	BTU's	REMARKS
7	1	BACKLINE FILLER, 24" - 36"	---	DWG #5	AF	AI								
50E	1	ACRYLIC CUP HOLDER - (8) CUP	LD PLASTICS	LDD50	AF	AI								
50F	---	---	---	---	AF	AI								
70.5B	2	BAKERY DISPLAY RACK - (18) BASKETS	LAKESIDE	DD-3835-78B	AF	AI	SEE ELECTRICAL DWGS							37-7/8"W x 33-3/4"D x 76"H
70.6	1	REMOVABLE TISSUE BAG DISPENSER	LAKESIDE	114591	AF	AI								
70.7	1	REMOVABLE TISSUE BAG DISPENSER	LAKESIDE	114843	AF	AI								
91.1	1	68"W x 40"D POS STATION	EQUIPMENT SUPPLIER	DWG #91.1	AF	AI								
95.4	1	EXPRESSO STATION, BACK LINE	EQUIPMENT SUPPLIER	DWG #95.4	AF	AI								
96	1	EXPRESSO MACHINE	SCHAERER	AMBIENTE 15 SO DUO PS	AF	AI	SEE ELECTRICAL DWGS			SEE MECHANICAL DWGS				36"W x 38"D
96B	2	EXPRESSO SYRUP & LID RACK	WIREFAB	WF17363	AF	AI								PROVIDE WATER SHUT-OFF VALVE
101C	1	DAIRY DISPENSER	AC DISPENSING	AC320-FP-7	AF	AI	SEE ELECTRICAL DWGS							
101D	1	SURE SHOT SUGAR DISPENSER	AC DISPENSING	AC6EPC	AF	AI	SEE ELECTRICAL DWGS							
101E	1	FLAVOR DISPENSER	AC DISPENSING	AC-FS10	AF	AI	SEE ELECTRICAL DWGS							
101G	1	20" SPEED RAIL FOR LIDS	MICROWIRE	AD-HLDR-2	AF	AI								
101H	1	13" SUGAR / TEA BAG / STIRRER HOLDER	MICROWIRE	AD-SH-1	AF	AI								
101P-3	1	AXIOM TWIN COFFEE BREWER	BUNN-O-MATIC	38700.0030	AF	AI	SEE ELECTRICAL DWGS			SEE MECHANICAL DWGS				BUNN PROVIDED CORD & PLUG INSTALLED BY G.C.
101PP-3	1	AXIOM SINGLE COFFEE BREWER	BUNN-O-MATIC	38700.0031	AF	AI	SEE ELECTRICAL DWGS			SEE MECHANICAL DWGS				BUNN PROVIDED CORD & PLUG INSTALLED BY G.C.
101Q-3	1	MULTI-HOPPER GRINDER & STORAGE SYSTEM	BUNN-O-MATIC	35600.0011	AF AF	AI AI	SEE ELECTRICAL DWGS							BUNN PROVIDED CORD & PLUG INSTALLED BY G.C.
107A	1	DUNKACCINO MACHINE	BUNN-O-MATIC	29250.0003	AF	AI	SEE ELECTRICAL DWGS			SEE MECHANICAL DWGS				BUNN PROVIDED 6' CORD INSTALLED BY G.C.
112	1	COOLATTA MACHINE	TAYLOR	430	AF	AI	SEE ELECTRICAL DWGS			SEE MECHANICAL DWGS				
114	1	COOLATTA SYRUP RACK	WIREFAB	WF22926	AF	AI								
117	1	COOLATTA STATION (MILLWORK)	EQUIPMENT SUPPLIER	DWG #117	AF	AI								36" - 72"W x 36"D BACKLINE
120F-1	1	UNDERCOUNTER REFRIGERATOR w/ CASTERS	DELFIELD	406-CA-SPL-RHH	AF	AI	SEE ELECTRICAL DWGS							27-1/4"W x 27-3/4"D, RIGHT HAND HINGE
200A	1	ICED COFFEE BREWER IC3DD	BUNN-O-MATIC	24450	AF	AI	SEE ELECTRICAL DWGS			SEE MECHANICAL DWGS				
201B	2	ICED COFFEE BREWER IC3DD	BUNN-O-MATIC	35100.0000	AF	AI	SEE ELECTRICAL DWGS			SEE MECHANICAL DWGS				
210C	1	BAGEL TOASTER	HATCO	TQ-20BA208.DNK	AF	AI	SEE ELECTRICAL DWGS							
212	1	REFRIGERATED SANDWICH UNIT	DELFIELD	UCD4464N-12-DD4	AF	AI	SEE ELECTRICAL DWGS							64"W x 31-1/2"D x 34" H
212A	1	TWO TIER MODULAR HOLDING CABINET	CARTER HOFFMAN	MC3W2S	AF	AI	SEE ELECTRICAL DWGS							
214	1	OVERSHELF REFRIGERATOR MOUNT	SUPPLIER	TBD	AF	AI								64"L x 20"D
215	2	TORNADO OVEN w/ STONE, PEEL, & (2) TRAYS	TURBO CHEF	NGC-1180-1-2019	AF	AI	SEE ELECTRICAL DWGS							
215A	1	STAINLESS STEEL MOBILE CART	EQUIPMENT SUPPLIER	DB-183216-NGSS	AF	AI								CART FOR TURBO CHEF OVENS
216	1	GLO-RAY MULTI-STAGING WARMER	HATCO	GRMW-3DD	AF	AI								WARMER FOR HASH BROWNS
250.1	1	HAND-OFF STATION	EQUIPMENT SUPPLIER	DWG #250.1	AF	AI								
270.1	1	CONDIMENT STATION	EQUIPMENT SUPPLIER	DWG #270.1	AF	AI								32" WIDE
395	1	HAND SINK w/ SIDE SPLASHES	UNIVERSAL	EHS-1	AF	AI				SEE MECHANICAL DWGS				
402	1	EMPLOYEE LOCKER	WIN-HOLT	EHS-1	AF	AI								
420A	3	SHELVING UNITS - 60" x 24"	METRO	ADR2460G	AF	AI								
420C	3	SHELVING UNITS - 36" x 24"	METRO	ADR2436G	AF	AI								
421A	1	SHELVING UNITS - 60" x 18"	METRO	ADR1860G	AF	AI								LOCATED IN REMOTE COOLER
421B	1	SHELVING UNITS - 48" x 18"	METRO	ADR1848G	AF	AI								LOCATED IN REMOTE COOLER
421C	1	SHELVING UNITS - 36" x 18"	METRO	ADR1836G	AF	AI								LOCATED IN REMOTE COOLER
421L	1	SHELVING UNITS - 72" x 18"	METRO	TBD	AF	AI								LOCATED IN REMOTE COOLER
434A	1	3-COMPARTMENT SINK - 112" LENGTH	UNIVERSAL	DD-3N202814-2D24	AF	AI				SEE MECHANICAL DWGS				
435B	---	---	---	---	AF	AI								
496	1	ICE MACHINE	HOSHIZAKI	KM-630MAH	AF	AI	SEE ELECTRICAL DWGS			SEE MECHANICAL DWGS				PRODUCES 619 lbs OF ICE PER 24 HR PERIOD
498E	1	ICE BIN	HOSHIZAKI	B500SF	AF	AI								360 lb CAPACITY
541A	1	DUNNAGE RACK, SINGLE TIER	LOCKWOOD	D2036-8	AF	AI								LOCATED IN REMOTE COOLER, 36"W x 20"D, USED FOR JUST BAKED
541C	2	DUNNAGE RACK, SINGLE TIER	LOCKWOOD	D2060-8	AF	AI								LOCATED IN REMOTE COOLER, 60"W x 20"D, USED FOR JUST BAKED
541D	1	DUNNAGE RACK, SINGLE TIER	LOCKWOOD	TBD	AF	AI								LOCATED IN REMOTE COOLER, 72"W x 20"D, USED FOR JUST BAKED
543	1	BAKERY PAN RACK	KELMAX	APRU1618-4-AT-BK-MOD	AF	AI								LOCATED IN REMOTE COOLER
544E	1	---	---	---	AF	AI								
552B	1	DOUBLE CONVECTION OVEN	ADAMATIC / BELSHAW	BX-DD-D	AF	AI	SEE ELECTRICAL DWGS			SEE MECHANICAL DWGS				FRESH BAKED OVEN WITH STAND
554	1	HAND GLAZER	BELSHAW	HG-18W	AF	AI								
560C	1	FINISHING TABLE - STAINLESS STEEL	UNIVERSAL	DD-6SLCB360S2ES	AF	AI								60" W x 36" D w/ 10" DEEP OVERSHELF
560.1	1	FLAT SOLID SHELVING	METRO	1460FG	AF	AI								60" W x 14" D
560.2	2	SINGLE DIRECT WALL MOUNT BRACKET	METRO	1WD14C	AF	AI								
561	4	FINISHED PRODUCT RACK	KELMAX	APRUE1326-5/AT/TG/BK	AF	AI								IN STORE USE ONLY
563	1	POWER BASE	EDHARD	P-4010	AF	AI	SEE ELECTRICAL DWGS							DISPENSING MACHINE
568	1	REFRIGERATOR: 1-DOOR	---	---	AF	AI	SEE ELECTRICAL DWGS							
573	1	FREEZER: 1-DOOR	---	---	AF	AI	SEE ELECTRICAL DWGS							
667	1	TRASH RECEPTACLE	RUBBERMAID	AOT30 SPEC	AF	AI								
673	1	FRONT LINE COFFEE MERCHANDISER	EQUIPMENT SUPPLIER	DWG #673	AF	AI								48" LENGTH
680	1	QUEUING SYSTEM	LAWERENCE	8T2-64/33-68	AF	AI								
851A	1	28" MIAIN STREET MENU (8) PANEL (6-PANELS + 2-COMBO FLIP FRAMES)	POSTERLOID	DD-NGN-28-8	AF	AI								221-1/8" L x 28-1/4" H, EACH PANEL = 27-1/2" W
853	1	PICK-UP RING - 38"	MILLWORK SUPPLIER	---	AF	AI								

DUNKIN DONUTS EQUIPMENT SCHEDULE NOTES:

1. EQUIPMENT SUPPLIER TO PLACE ALL NEW EQUIPMENT.
2. GENERAL CONTRACTOR TO PLACE ALL EXISTING EQUIPMENT IF APPLICABLE.
3. GENERAL CONTRACTOR TO MAKE ALL MECHANICAL, PLUMBING, AND ELECTRICAL CONNECTIONS FOR ALL EQUIPMENT.
4. REFER TO DUNKIN' BRANDS MULTIBRAND EQUIPMENT SPECIFICATIONS ON DUNKIN' BRANDS WEBSITE: HTTP://extranet.dunkinbrands.com FOR COMPLETE EQUIPMENT AND UTILITY INFORMATION. DUNKIN' BRANDS WEB SITE ALWAYS TAKES PRECEDENCE OVER DRAWINGS IN INSTANCE OF CONFLICTS.

CHARLEY'S SUBS EQUIPMENT SCHEDULE

ITEMS FURNISHED / INSTALLED AS FOLLOWS:
AF -- AAFES FURNISHED
AI -- AAFES INSTALLED
CF -- CONTRACTOR FURNISHED
CI -- CONTRACTOR INSTALLED

SCHEDULE NOTE:
CONTRACTOR TO VERIFY ALL UTILITY REQUIREMENTS, INSTALL ROUGH-INS, & MAKE FINAL CONNECTIONS.

ITEM NO.	QUANTITY	DESCRIPTION	MANUFACTURER	MODEL NUMBER	FURNISHED BY:	INSTALLED BY:	ELECTRICAL VOLTS	PHASE	AMPS	PLUMBING / MECHANICAL WATER	DRAIN	GAS	BTU's	REMARKS
E1	1	P.O.S. CASH REGISTER w/ DRAWER	MICROS	---	AF	AI	SEE ELECTRICAL DWGS			---				
E2	1	GOOSENECK MICROPHONE	SURE BROTHER	5155BG-18XF	AF	AI								PURCHASE AT RADIO SHACK
E3	1	40 WATT AMPLIFIER	PASO SOUND PRODUCT	T-3010-BGM	AF	AI	SEE ELECTRICAL DWGS							12.75"W x 10.625"D x 4"H, PURCHASE AT RADIO SHACK
E4	1	RECEIPT PRINTER	---	TM-H6000II	AF	AI	SEE ELECTRICAL DWGS							7.3"W x 11.7"D x 7.3"H
E5	1	CEILING SPEAKER	QUAM-NICHOLLS CO.	8C10FEPAX	AF	CI								PURCHASE AT RADIO SHACK
E7	1	MONITOR	---	15" SVGA	AF	AI	SEE ELECTRICAL DWGS							
G3	1	CONCEPT SIGN - LOGO & LETTERS	EAGLE SIGN CO.	24" HIGH LOGO	AF	AI	SEE ELECTRICAL DWGS							169"W x 24"H, PROVIDE SOLID PLYWOOD BACKING FOR SIGN MOUNTING
G4	1	ORDER HERE SIGN	DIGICO IMAGING	---	AF	AI								23.86"W x 14"H
G5	1	PICK-UP HERE SIGN	DIGICO IMAGING	---	AF	AI								23.86"W x 14"H
G6	1	NEON PHILLY CHEESE-STEAK SIGN	ZEON NEON	---	AF	AI								36"W x 24"H, MOUNTED AT EYE LEVEL
G7	1	SNEEZE GUARD RIBBON SIGN	DIGICO	---	AF	AI								11'-0"W x .0625"D x 5"H
G8	1	OVAL FRESH GRILLED LIGHT BOX	DIGICO IMAGING	---	AF	AI	SEE ELECTRICAL DWGS							48.5"W x 7"D x 27.625"H
G9	1	48" x 36" LIGHT BOX	TRANZLIGHTS	---	AF	AI	SEE ELECTRICAL DWGS							38.25"W x 5"D x 50.25"H, MOUNT AT 4'-6" A.F.F.
G9.1	1	31" x 36" LED LIGHT BOX	DIGICO IMAGING	---	AF	AI	SEE ELECTRICAL DWGS							31"W x 5"D x 36"H, MOUNT AT 4'-6" A.F.F.
H1	1	EXHAUST HOOD w/ LED LIGHT STRIPS	---	---	CF	CI	SEE ELECTRICAL DWGS			SEE MECHANICAL DWGS				LED LIGHTS INSTALLED BY SIGN VENDOR
K1	1	ELECTRIC FRYER	FRYMASTER	RE14-SC	AF	AI	SEE ELECTRICAL DWGS							46.86"W x 34.55"D x 50.64"H
K1-1	1	ELECTRIC GRIDDLE	MAGIKITCH'N	MKE-48	AF	AI	SEE ELECTRICAL DWGS							48"W x 31-9/16"D x 23-9/32"H
K2	1	REFRIGERATED WORK TOP TABLE	TRUE MODEL	TWT-48	AF	AI	SEE ELECTRICAL DWGS							49.125"W x 23.875"D x 35.625"H
K3	1	FOOD WARMER AND DUMP STATION	---	FWH-A1	AF	AI	SEE ELECTRICAL DWGS							15"W x 23.75"D x 45.25"H, TO BE LOCATED CLOSEST TO POS SYSTEM
K4	1	EQUIPMENT STAND	---	ES-306-TA-255 w/ 5" CASTERS	AF	AI								72"W x 30"D x 18"H
K5	1	TOASTER-CONVEYOR	HATCO TOAST - QWIK	1800H w/ CUSTOM CHARLEY'S BREAD TRAY	AF	AI	SEE ELECTRICAL DWGS							18.5"W x 22.75"D x 16.625"H
K6	1	HOT TOPPING	SERVER PRODUCTS	SERVER TWIN FS/FSP#81290	AF	AI	SEE ELECTRICAL DWGS							17"W x 13.5"D x 15.31"H
K7	1	BUMP BAR	---	KP-3000 KEY PAD	AF	AI								
K9	1	MEGA TOP SANDWICH / SALAD UNIT	TRUE	TSSU-27-12M-C	AF	AI	SEE ELECTRICAL DWGS							27.813"W x 34.125"D x 46.47"H
K10	1	BEVERAGE DISPENSER	CRATHCO BY GRINDMASTER	D35-3	AF	AI	SEE ELECTRICAL DWGS							25.75"W x 15"D x 27.25"H, (3) 3-GALLON BOWLS
K13	1	MEGA TOP SANDWICH / SALAD UNIT	TRUE	TSSU-48-18M-B	AF	AI	SEE ELECTRICAL DWGS							48.25"W x 34"D x 46.25"H
K14	1	ELECTRIC FOOD PROCESSOR	ROBOT COUPE	CL-50	AF	AI	SEE ELECTRICAL DWGS							
K15	1	SHORTENING SHUTTLE	WORCESTER INDUSTRIAL PRODUCTS	SS709	AF	AI								30.13"W x 15.38"D x 9.75"H
K16	1	HEAT SHIELD	TRI-MARK	M112A & M100A w/ 48" MATRIZ CUSTOM	AF	AI								
L1	2	PENDANT LIGHT	ACCESS LIGHTING	28204BS-RED	AF	CI								
L2	3	4-HEAD TRACK LIGHT	COOPER LIGHTING	LAZER TRACK LIGHT	AF	AI								w/ LZR302p ROUNDBACK HEAD w/ BAFFLE, WHITE, INSTALL AT 6'-0" A.F.F. TO BOTTOM OF SHADE
M2	1	3-CUP AAFES MOBILE DISPENSER	TRI-MARK	---	AF	AI								8.125"W x 24.125"D x 26.125"H, LISA WOOD #816-746-5077 (O)
M5	1	SNEEZE GUARD	REFERENCE CUT SHEET	M112A & M100A w/ 48" MATRIZ LIGHT UNIT	AF	AI								DOUG ENGLISH #800-651-2711
MB01	1	MONITOR-KDS-BRACKET	FOR 13"-15" MONITOR	7190	AF	AI								BRACKET TO BE INSTALLED BY CONTRACTOR
MG1	1	6-PANEL MENU BOARD	DIGICO IMAGING w/ GRAPHICS SYSTEMS	LED	AF	AI	SEE ELECTRICAL DWGS							21.6875"W EACH x .875"D x 36.75"H, w/ BREAKFAST MENU
MWP1	1	STAINLESS STEEL WALL PANEL	TRI-MARK	CUSTOM	AF	AI								132"W x 33"H, LISA WOOD #816-746-5077 (O)
P11	1	DROP IN ICE STATION	---	305	AF	AI								21.25"W x 15.25"D x 13"H, FLOOR DRAIN - CONTRACTOR TO FIELD CUT OPENING IN COUNTERTOP
SWP	1	SMALL-WARE PACKAGE	WASSERTROM w/ BREAKFAST ITEMS	---	AF	AI								CUT SHEET NOT AVAILABLE
UV04	1	STANCHIONS PACKAGE	LAVI PRODUCTS	3000WB/BK; 7 POSTS	AF	AI								

BACK OF HOUSE EQUIPMENT SCHEDULE

ITEMS FURNISHED / INSTALLED AS FOLLOWS:
AF -- AAFES FURNISHED
AI -- AAFES INSTALLED
CF -- CONTRACTOR FURNISHED
CI -- CONTRACTOR INSTALLED

SCHEDULE NOTE:
CONTRACTOR TO VERIFY ALL UTILITY REQUIREMENTS, INSTALL ROUGH-INS, & MAKE FINAL CONNECTIONS.

ITEM NO.	QUANTITY	DESCRIPTION	MANUFACTURER	MODEL NUMBER	FURNISHED BY:	INSTALLED BY:	ELECTRICAL VOLTS	PHASE	AMPS	PLUMBING / MECHANICAL WATER	DRAIN	GAS	BTU's	REMARKS
BH02	2	BAG 'N BOX	---	---	AF	AI								39"W
BH03	1	BULK CO2 TANK	TACO	CA	AF	AI								
BH05	1	REFRIGERATOR - REACH-IN, 2-DOOR	TRAULSEN	RHT232WUT-FHS	AF	AI	SEE ELECTRICAL DWGS							58"W x 35"D x 83.25"H
BH05A	1	REFRIGERATOR - REACH-IN, 1-DOOR	TRAULSEN	RHT132WUT-FHS	AF	AI	SEE ELECTRICAL DWGS							29.875"W x 35"D x 83.25"H
BH06	2	FREEZER, REACH-IN, 1-DOOR	TRAULSEN	RLT132WUT-FHS	AF	AI	SEE ELECTRICAL DWGS							29.875"W x 35"D x 83.25"H
BH10	1	3-COMPARTMENT SINK	EAGLE GROUP	FN2060-3-24-14/3	AF	AI				SEE MECHANICAL DWGS				114"W x 27"D x 37.5"H RIM
BH12A	15	WIRE SHELVING	EAGLE GROUP	EAGLE GARD	AF	AI								48"W x 24"D w/ 74"H POSTS
BH12B	7	WIRE SHELVING	EAGLE GROUP	EAGLE GARD	AF	AI								60"W x 24"D w/ 74"H POSTS
BH12C	1	WIRE SHELVING	EAGLE GROUP	EAGLE GARD	AF	AI								72"W x 24"D w/ 74"H POSTS
BH14A	2	HAND SINK - WALL MOUNTED	EAGLE	HSA-10-FA-1P	AF	AI				SEE MECHANICAL DWGS				18-7/8"W x 14-3/4"D x 39-1/4"H, FOOT OPERATED PEDESTAL UNIT
BH15	---	SMART WALL SYSTEM	METRO	SMARTWALL PLUS	AF	AI								48"W x 14"D, w/ ACCESSORIES
BH16	2	60" WORK TABLE	EAGLE GROUP	T3060SE-BS	AF	AI								60"W x 30"D x 35-1/8"H +1" w/ LEG ADJUSTMENT
BH21	2	TRAY DRYING RACK	INTERMETRO	RD13N	AF	AI								
BH25	1	HIGH FLOW WATER FILTER	EVERPURE	EV9437-11	AF	AI	SEE ELECTRICAL DWGS			SEE MECHANICAL DWGS				34"W x 6.75"D x 25.69"H, WALL MOUNTED
BH61	1	1-COMPARTMENT SINK - L/H DRNB-52"	EAGLE GROUP	FN2020-1-24L-14/3	AF	AI				SEE MECHANICAL DWGS				70"W x 27"D x 37-1/2"H RIM

SODA FOUNTAIN EQUIPMENT SCHEDULE

ITEMS FURNISHED / INSTALLED AS FOLLOWS:
AF -- AAFES FURNISHED
AI -- AAFES INSTALLED
CF -- CONTRACTOR FURNISHED
CI -- CONTRACTOR INSTALLED

SCHEDULE NOTE:
CONTRACTOR TO VERIFY ALL UTILITY REQUIREMENTS, INSTALL ROUGH-INS, & MAKE FINAL CONNECTIONS.

ITEM NO.	QUANTITY	DESCRIPTION	MANUFACTURER	MODEL NUMBER	FURNISHED BY:	INSTALLED BY:	ELECTRICAL VOLTS	PHASE	AMPS	PLUMBING / MECHANICAL WATER	DRAIN	GAS	BTU's	REMARKS
DS1	1	SELF-SERVE BEVERAGE COUNTER	QUALSERV	---	AF	CI								132"W x 39"D x 34"H
DS2	1	ICE TEA BREWER	BUNN	TU3	AF	CI	SEE ELECTRICAL DWGS			SEE MECHANICAL DWGS				10"W x 21"D x 29.8"H
DS3	1	COFFEE BREWING SYSTEM	DIGITAL GEMINI	---	AF	CI	SEE ELECTRICAL DWGS			SEE MECHANICAL DWGS				18"W x 16.5"D x 29"H
DS4	2	BEVERAGE DISPENSER	LANCER	IBD4500 w/81-0056 LEGS	AF	CI	SEE ELECTRICAL DWGS			SEE MECHANICAL DWGS				44"W x 30.5"D x 34"H
	2	ICE MACHINE	MANITOWOC	SD-0452A	AF	CI	SEE ELECTRICAL DWGS			SEE MECHANICAL DWGS				
DS8	2	CARBONATOR	McCANN'S	E200397	AF	CI	SEE ELECTRICAL DWGS			SEE MECHANICAL DWGS				13.5"W x 12.75"D x 10"H
DS12	1	CONDIMENT DISPENSER	VERSA LINE	12RS	AF	CI	SEE ELECTRICAL DWGS			SEE MECHANICAL DWGS				25.125"W x 15"D x 13.625"H

BARBER SHOP EQUIPMENT SCHEDULE

ITEMS FURNISHED / INSTALLED AS FOLLOWS:
AF -- AAFES FURNISHED
AI -- AAFES INSTALLED
CF -- CONTRACTOR FURNISHED
CI -- CONTRACTOR INSTALLED

SCHEDULE NOTE:
CONTRACTOR TO VERIFY ALL UTILITY REQUIREMENTS, INSTALL ROUGH-INS, & MAKE FINAL CONNECTIONS.

ITEM NO.	QUANTITY	DESCRIPTION	MANUFACTURER	MODEL NUMBER	FURNISHED BY:	INSTALLED BY:	ELECTRICAL VOLTS	PHASE	AMPS	PLUMBING / MECHANICAL WATER	DRAIN	GAS	BTU's	REMARKS
BS01	7	BARBER STATION	TAKARA BELMONT	KOKEN - #AF-033	AF	AI	SEE ELECTRICAL DWGS							
BS02	7	SHAMPOO SINK	AMERICAN STANDARD	TOWNSQUARE COUNTERTOP SINK	AF	AI				SEE MECHANICAL DWGS				
BS03	7	FLOOR MAT		#BB-451	AF	AI								
BS04	7	BARBER CHAIR		#BB225HR	AF	AI								
BS05	11	WAITING CHAIR		#RC-164	AF	AI								
BS06	1	CASH STAND		#AF-061B	AF	AI								
BS07	2	MAGAZINE RACK	TAKARA BELMONT USA, INC.	#AF-035	AF	AI								
BS08	2	COAT RACK		#AF-023	AF	AI								

ALTERATIONS EQUIPMENT SCHEDULE

ITEMS FURNISHED / INSTALLED AS FOLLOWS:
AF -- AAFES FURNISHED
AI -- AAFES INSTALLED
CF -- CONTRACTOR FURNISHED
CI -- CONTRACTOR INSTALLED

SCHEDULE NOTE:
CONTRACTOR TO VERIFY ALL UTILITY REQUIREMENTS, INSTALL ROUGH-INS, & MAKE FINAL CONNECTIONS.

ITEM NO.	QUANTITY	DESCRIPTION	MANUFACTURER	MODEL NUMBER	FURNISHED BY:	INSTALLED BY:	ELECTRICAL VOLTS	PHASE	AMPS	PLUMBING / MECHANICAL WATER	DRAIN	GAS	BTU's	REMARKS
AL01	1	HANGING RACK - DOUBLE		---	AF	AI								
AL02	1	HANGING RACK - SINGLE		---	AF	AI								
AL03	3	CART		---	AF	AI								
AL04	1	CASH REGISTER	VIRA MFG, INC.	---	AF	AI	SEE ELECTRICAL DWGS							
AL05	2	WAITING CHAIR		---	AF	AI								
AL06	3	SEWING MACHINE		---	AF	AI	SEE ELECTRICAL DWGS							
AL07	1	WORK TABLE		---	AF	AI								
AL09	1	IRON & STAND		---	AF	AI	SEE ELECTRICAL DWGS							
AL11	1	SINGLE COUNTER w/ "T" HANGBAR	VIRA MFG, INC.	---	AF	AI								

DATES AND REVISIONS	
No.	Date/Description
	04.11.12 -- BID

EXCHANGE™

RICHARD L. BOWEN + ASSOCIATES INC.
13000 Shaker Boulevard / Cleveland, Ohio 44120
Phone: (216) 491-9300 Fax: (216) 491-8053
www.rlba.com - email@rlba.com
ENGINEERS • ARCHITECTS • CONSTRUCTION MANAGERS

FT. MYER EXCHANGE
JBMHH - MYER
ARLINGTON, VIRGINIA

EQUIPMENT SCHEDULES

DRAWN BY: RTV
CHECKED BY: --
RLB NO.: 7800.02
DRAWING NO. EQ1.2

P:\7800\7800.02 FT. MYER PX IMAGE UPGRADE CONST. CONTRACT DOCS\ARCH\780002_EQ01-02.DWG | PLOTTED 04.26.2012 03:53PM BY RYAN VANJO

GENERAL

1. COORDINATE WITH ALL DRAWINGS FOR INFORMATION RELATED TO STRUCTURAL WORK. ANY CHANGES TO THE BUILDING STRUCTURAL SYSTEM SHALL BE REDESIGNED ONLY BY RICHARD L. BOWEN + ASSOCIATES, INC. ALL CHANGES MUST HAVE PRIOR AUTHORIZATION OF THE OWNER AND RICHARD L. BOWEN + ASSOCIATES, INC.
2. ALL CONTRACTORS SHALL COORDINATE WITH ALL DRAWINGS WITHIN THE CONTRACT DOCUMENTS.
3. THE CONTRACTOR SHALL VERIFY ALL DIMENSIONS, ELEVATIONS AND CONDITIONS RELATED TO EXISTING CONSTRUCTION, EXISTING SERVICES, AND THE SITE BEFORE BEGINNING WORK.
4. BUILDING CODE: 2006 INTERNATIONAL BUILDING CODE.
5. DESIGN LOADS:

FLOOR LIVE LOAD.....100 PSF
ROOF LIVE LOAD..... 20 PSF

ROOF SNOW LOAD
GROUND SNOW LOAD ..... Pg=25.0 PSF
FLAT ROOF SNOW LOAD ..... Pf=20.0 PSF
SNOW EXPOSURE FACTOR ..... Ce=1.0
SNOW LOAD IMPORTANCE FACTOR ..... I=1.0
THERMAL FACTOR ..... Ct=1.0

WIND DESIGN DATA
BASIC WIND SPEED (3 SEC. GUST)..... 90 MPH
WIND LOAD IMPORTANCE FACTOR..... Iw=1.0
EXPOSURE CATEGORY ..... B
INTERNAL PRESSURE COEFFICIENT ..... ±0.18
COMPONENTS AND CLADDING WIND DESIGN PRESSURES.....PER 1609.6.2.1 (2)
JOIST NET UPLIFT ..... 15 PSF

SEISMIC DESIGN DATA
Ss..... 0.15
S1..... 0.05
SITE CLASS ..... E
SPECTRAL RESPONSE COEFICIENTS ..... Sds=0.25, Sd1=0.12
SEISMIC DESIGN CATEGORY..... B

6. THE CONTRACTOR SHALL BE RESPONSIBLE FOR THE DESIGN, INSTALLATION, AND THE FINAL CLEARANCE OF ANY TEMPORARY NEEDLING, UNDERPINNING, SHORING, OR BRACING OF EXISTING STRUCTURES.
7. CONSTRUCTION LOADS SHALL NOT EXCEED DESIGN LIVE LOADS. THE CONTRACTOR SHALL BE RESPONSIBLE FOR ALL DESIGN REQUIRED TO SUPPORT CONSTRUCTION EQUIPMENT USED IN CONSTRUCTING THIS PROJECT. SHORING AND RESHORING IS THE RESPONSIBILITY OF THE CONTRACTOR.
8. IF THE FABRICATOR HAS BEEN AUTHORIZED TO USE THE ARCHITECT AND ENGINEER'S DRAWINGS AS ERECTION DRAWINGS, THE FABRICATOR MUST REMOVE ALL TITLE BLOCKS, PROFESSIONAL SEALS AND ANY OTHER REFERENCES TO THE ARCHITECT AND ENGINEER FROM THAT ERECTION DRAWING. THE FABRICATOR'S NAME AND TITLE SHALL BE PLACED ON THE ERECTION DRAWINGS.

FOUNDATIONS

1. ASSUMED DESIGN SOIL BEARING PRESSURE IS 2000 PSF. FROST DEPTH IS 3'-0".
2. SOIL SUITABILITY AND BEARING CAPACITY SHALL BE FIELD VERIFIED PRIOR TO CONSTRUCTION.
3. DESIGN PRESSURES FOR WALLS BELOW GRADE:
SOIL WEIGHT..... 120 PCF
AT REST..... 60 PSF/FT
AT ACTIVE..... 35 PSF/FT
4. NOTIFY THE ARCHITECT AS SOON AS POSSIBLE OF ANY UNUSUAL SOIL CONDITIONS IN WITH VARIANCE THE TEST BORINGS.
5. SET FOUNDATIONS AT ELEVATIONS SHOWN, OR ON FIRM MATERIAL OF DESIGN BEARING CAPACITY, WHICHEVER IS LOWER. THE GEOTECHNICAL ENGINEER SHALL VERIFY THAT EACH FOOTING PLACED IS BEARING ON DESIGN MATERIAL.
   A. ALL SOIL SURROUNDING AND UNDER ALL FOOTINGS, FLOOR SLABS, ETC. SHALL BE PROTECTED FROM FREEZING AND FROST ACTION DURING CONSTRUCTION.
   B. WHERE FOOTINGS ARE IN CLOSE PROXIMITY OF SEWERS, DRAINS, CONDUITS, UNDERFLOOR PIPES, ETC., BOTTOM OF ALL FOOTINGS SHALL BE AT OR BELOW INVERT ELEVATIONS OF ELEMENTS NOTED HEREIN.
6. STEP FOOTINGS AT A RATIO OF ONE (1) VERTICAL TO TWO (2) HORIZONTAL, WITH A MAXIMUM VERTICAL STEP OF 2'-0", UNLESS NOTED OTHERWISE.
7. BACKFILLING AGAINST FOUNDATION OR PIT WALLS SHALL NOT BE PERMITTED UNTIL THE SUPPORTING FLOORS ARE IN PLACE AND ARE ABLE TO RESIST THE IMPOSED LATERAL FORCES. EXCEPT FOR CANTILEVER RETAINING WALLS OR UNLESS NOTED OTHERWISE ON DRAWINGS, THE WALLS ARE SUPPORTED BY THE FLOOR ABOVE AND BELOW. PROPER TEMPORARY BRACING MAY BE USED IN LIEU OF THE FLOOR SUPPORT BASED UPON THE DESIGN BY A PROFESSIONAL ENGINEER. THE DESIGN OF TEMPORARY BRACING IS THE TOTAL RESPONSIBILITY OF THE CONTRACTOR.

CAST IN PLACE CONCRETE

1. CAST IN PLACE CONCRETE SHALL CONFORM TO THE LATEST ACI 318 & 350 CODE, STANDARDS AND ACI 301 "STANDARD SPECIFICATIONS FOR STRUCTURAL CONCRETE", EXCEPT AS MODIFIED HEREIN.
2. SUBMIT LABORATORY TEST REPORTS FOR CONCRETE MATERIALS AND PROPOSED MIX DESIGN TESTS AND DATA.
3. MINIMUM ULTIMATE COMPRESSIVE STRENGTH OF CONCRETE IN 28 DAYS SHALL BE: 4000 PSI – ALL CONCRETE, CEMENT CONTENT OF 564 LB/CUBIC YARD; WC 0.45
4. REINFORCING BARS: A615 GRADE 60 KSI YIELD STRENGTH, UNLESS NOTED OTHERWISE. WELDING OR TACK WELDING A615 BARS SHALL NOT BE PERMITTED.
5. REINFORCING BARS FOR WELDED APPLICATIONS SHALL CONFORM WITH A706, 60 KSI YIELD STRENGTH.
6. WELDED WIRE FABRIC: ASTM A185, FLAT SHEET. ROLLED WWF SHALL NOT BE PERMITTED.
7. CALCIUM CHLORIDE SHALL NOT BE PERMITTED NOR SHALL ANY ADMIXTURE CONTAINING CALCIUM CHLORIDE BE PERMITTED.
8. ALL CONCRETE SHALL CONTAIN A WATER REDUCING ADMIXTURE CONFORMING TO ASTM C494, TYPE A, F OR G.
9. ALL CONCRETE EXPOSED TO THE WEATHER OR IN A LOCATION VULNERABLE TO DEICERS SHALL CONTAIN AN AIR-ENTRAINED ADMIXTURE CONFORMING TO ASTM C260. THE AMOUNT OF ENTRAINED AIR SHALL BE 6% ± 1%.
10. CONCRETE SHALL BE DISCHARGED AT THE SITE WITHIN 1 1/2 HOURS AFTER WATER HAS BEEN ADDED TO THE CEMENT AND AGGREGATES. ADDITION OF WATER TO THE MIX AT THE PROJECT SITE WILL NOT BE PERMITTED. ALL WATER MUST BE ADDED AT THE BATCH PLANT. SLUMP MAY BE ADJUSTED ONLY THROUGH THE USE OF ADDITIONAL WATER REDUCING ADMIXTURE OR HIGH RANGE WATER REDUCING ADMIXTURE.
11. PRECAST CONCRETE CUBES OR SAND PLATE CHAIRS SHALL BE USED FOR THE SUPPORT OF REINFORCING ON GRADE. CONCRETE BLOCK OR CLAY MASONRY BRICK ARE NOT PERMITTED.
12. CONSTRUCTION JOINTS SHALL BE SUBJECT TO REVIEW BY RICHARD L. BOWEN + ASSOCIATES, INC., AND SHALL BE LOCATED AND DETAILED AS SPECIFIED ON THE DRAWINGS OR AS NOTED.
   A. FRAMED SLABS AND WALLS – LOCATE AT MIDSPAN. PROVIDE ONE CONTINUOUS HORIZONTAL SHEAR KEY 1 1/2" DEEP x 1/3 THE DEPTH OF THE SLAB OR WALL.
   B. BEAMS – LOCATE AT MIDSPAN. PROVIDE TWO HORIZONTAL SHEAR KEYS 1 1/2" DEEP x 1/6 THE DEPTH OF THE MEMBER AT EACH MEMBER.
13. ALL WELDED WIRE FABRIC SHALL BE CHAIRED TO ITS PROPER HEIGHT AND MAINTAINED AT THE PROPER HEIGHT THROUGHOUT THE CONCRETE PLACING OPERATION. LIFTING OF WELDED WIRE FABRIC WITH A HOOK DURING CONCRETE PLACEMENT SHALL NOT BE PERMITTED.
14. OPENINGS SHALL NOT BE PROVIDED IN FRAMED SLABS, BEAMS, COLUMNS, OR WALLS UNLESS SHOWN ON THE STRUCTURAL DRAWINGS, OR APPROVED IN WRITING PRIOR TO PLACING CONCRETE. CUTTING HOLES THROUGH BEAMS OR COLUMNS SHALL NOT BE PERMITTED. CUTTING HOLES LARGER THAN 10" SQUARE OR ROUND THROUGH SLABS SHALL NOT BE PERMITTED.
15. CHAMFER EXPOSED EDGES OF CONCRETE 3/4", UNLESS NOTED OTHERWISE.
16. PROVIDE CONTROL JOINTS IN ALL SLABS ON GRADE AS SHOWN ON DRAWINGS.
17. TOP LAYER OF REINFORCING STEEL IN BEAMS, SLABS, WALLS AND FOOTINGS SHALL BE CONSIDERED TOP BARS REGARDLESS OF THICKNESS OF CONCRETE BELOW THE BARS.
18. ALL WALL FOOTING REINFORCING SHALL RUN CONTINUOUS THROUGH COLUMN FOOTINGS.
19. BEND ALL HORIZONTAL WALL AND BEAM BARS AROUND ADJACENT CORNERS AND LAP ACCORDING TO TABLE #1.
20. BONDBREAKER MATERIAL SHALL BE 15 POUND FELT PAPER.
21. DETERMINE SIZE AND LOCATION OF MECHANICAL EQUIPMENT AND MAKE PROVISIONS FOR BOLTS, SLEEVES, PADS, ETC., IN ACCORDANCE WITH THE MANUFACTURER'S CERTIFIED DRAWINGS. THIS WORK SHALL BE COORDINATED WITH THE TRADES INVOLVED PRIOR TO ANY CONCRETE PLACEMENT.
22. PROVIDE 3" MINIMUM CONCRETE COVER FOR ALL STRUCTURAL STEEL BELOW GRADE.
23. SLABS ON GRADE SHALL HAVE CONSTRUCTION OR CONTROL JOINTS AT ALL COLUMN LINES AND AT A MAXIMUM SPACING OF 36 TIMES THE SLAB THICKNESS BETWEEN.
24. REINFORCING BAR LAP SPLICES AND ANCHORAGE LENGTH SHALL CONFORM WITH "MINIMUM LAP SPLICE AND ANCHORAGE DIMENSION TABLE #1" UNLESS NOTED OTHERWISE ON THE DRAWINGS.

MINIMUM LAP SPLICE AND ANCHORAGE DIMENSION TABLE #1
Fy = GRADE 60, NON-COATED BARS

3000 PSI CONCRETE					
BAR SIZE	TOP BARS LAP	ANCHORAGE	BAR SIZE	OTHER BARS LAP	ANCHORAGE
#3	21"	16"	#3	16"	13"
#4	29"	22"	#4	22"	17"
#5	42"	32"	#5	33"	26"
#6	56"	43"	#6	43"	34"
#7	91"	69"	#7	70"	53"
#8	112"	87"	#8	87"	66"
#9	136"	104"	#9	104"	80"

4000 PSI CONCRETE					
BAR SIZE	TOP BARS LAP	ANCHORAGE	BAR SIZE	OTHER BARS LAP	ANCHORAGE
#3	18"	14"	#3	16"	12"
#4	25"	19"	#4	20"	15"
#5	37"	29"	#5	29"	21"
#6	48"	38"	#6	38"	29"
#7	79"	60"	#7	60"	47"
#8	96"	75"	#8	75"	57"
#9	117"	91"	#9	91"	69"

1. WHEN LAPPING TWO DIFFERENT SIZE BARS, USE THE LAP DIMENSION OF THE SMALLER BAR OR THE ANCHORAGE DIMENSION OF THE LARGER BAR. USE WHICHEVER DIMENSIONIS LARGER.

TYPICAL REINFORCING BAR CLEARANCE TABLE.

LOCATION	CLEARANCE
CONCRETE CAST AGAINST AND PERMANENTLY EXPOSED TO EARTH	3"
BEAMS (LONGITUDINAL REINFORCING PARALLEL TO SPAN OF SLAB)	3"
BEAMS (LONGITUDINAL REINFORCING PERPENDICULAR TO SPAN OF SLAB)	2"
BEAM STIRRUPS	1 1/2"
COLUMNS AND PIERS (VERTICAL REINFORCING)	2"
COLUMN TIES	1 1/2"
WALLS INTERIOR FACE NOT EXPOSED TO SLUDGE, LIQUIDS, ETC.	1"
WALLS INTERIOR FACE EXPOSED TO SLUDGE, LIQUIDS, ETC.	2"
WALLS EXTERIOR FACE #5 AND SMALLER	1 1/2"
WALLS EXTERIOR FACE #6 AND LARGER	2"
SLABS (INTERIOR INCLUDING STAIRS) NOT EXPOSED TO SLUDGE LIQUIDS, ETC	1"
SLABS INTERIOR EXPOSED TO SLUDGE, LIQUIDS, ETC	2"
SLABS (EXTERIOR INCLUDING STAIRS)	1 1/2"
STRUCTURAL SLABS ON GRADE (BOTTOM REINFORCING)	2"
SLABS ON GRADE (WELDED WIRE FABRIC)	1/3 SLAB THICKNESS FROM TOP OF SLAB

MASONRY

1. MASONRY SHALL CONFORM TO THE LATEST EDITIONS OF THE REFERENCES AND STANDARDS LISTED BELOW, EXCEPT AS MODIFIED HEREIN, IN ADDITION TO ALL OTHER REQUIREMENTS OF THE CONTRACT DOCUMENTS AND STANDARD PRACTICES.
   A. BUILDING CODE REQUIREMENTS FOR MASONRY STRUCTURES (ACI 530/ASCE 5/TMS 402).
   B. SPECIFICATION FOR MASONRY STRUCTURES (ACI 530.1/ASCE 6/TMS 602).
2. HOLLOW AND SOLID CONCRETE MASONRY UNITS SHALL CONFORM WITH ASTM C90, TYPE I WITH A MINIMUM COMPRESSIVE STRENGTH OF 1900 PSI, EACH UNIT, NET CROSS SECTIONAL AREA. THE UNITS SHALL BE MANUFACTURED SO THE CORES AND WEBS LINE UP WHEN LAID IN RUNNING BOND.
   A. UNITS SHALL BE MEDIUM WEIGHT UNITS WITH A DRY NET WEIGHT OF NOT MORE THAN 115 PCF.
3. MORTAR FOR ALL WALLS SHALL BE ASTM C270 TYPE S UNLESS NOTED OTHERWISE, WITH A MINIMUM COMPRESSIVE STRENGTH OF 1800 PSI IN 28 DAYS.
4. GROUT SHALL CONFORM WITH ASTM C476 COARSE GROUT, 3/8" MAXIMUM SIZE COARSE AGGREGATE, WITH A MINIMUM COMPRESSIVE STRENGTH OF 3000 PSI IN 28 DAYS.
5. PROVIDE THE FOLLOWING WALL CONSTRUCTION AT ALL MASONRY WALLS UNLESS NOTED OTHERWISE.
   A. MASONRY GROUTED SOLID, 32" LONG AND 16" HIGH UNLESS NOTED OTHERWISE, CENTERED UNDER EACH WALL BEARING STEEL BEAM.
   B. ALL CORES WHICH CONTAIN VERTICAL REINFORCING SHALL BE GROUTED SOLID FULL HEIGHT OF WALL.
6. CONVENTIONAL REINFORCING, HORIZONTAL AND VERTICAL, SHALL BE A615 GRADE 60 KSI YIELD STRENGTH. WELDING A615 BARS SHALL NOT BE PERMITTED.
7. REINFORCING BARS FOR WELDED APPLICATIONS SHALL CONFORM WITH A706, 60 KSI YIELD STRENGTH.
8. REFER TO ARCHITECTURAL DRAWINGS FOR MATERIAL REQUIREMENTS FOR FIRE RATED ASSEMBLIES.
9. ADDITIONAL VERTICAL REINFORCEMENT, 1 #5 AT EACH SIDE OF WALL OPENINGS, AT WALL ENDS (INCLUDING CONTROL JOINTS) , AND AT ALL CORNERS.
10. PROVIDE DOWELS INTO WALL FOOTING TO MATCH VERTICAL BARS LISTED ABOVE.
11. HORIZONTAL REINFORCEMENT– LADDER TYPE, HOT DIPPED GALVANIZED DUR-O-WAL 3/16" SIDE RODS AND #9 GAGE CROSS RODS, OR APPROVED EQUAL. ALL HORIZONTAL REINFORCEMENT SHALL BE CONTINUOUS AT CORNERS. STOP HORIZONTAL REINFORCEMENT AT CONTROL JOINTS AND EXPANSION JOINTS. SPACE 16" o.c. VERTICALLY ABOVE GRADE AND 8" o.c. VERTICALLY BELOW GRADE.
12. ADDITIONAL HORIZONTAL REINFORCEMENT – 1 #5 BAR AT FIRST COURSE ABOVE AND BELOW ALL WALL OPENINGS. BARS TO EXTEND MINIMUM 2'-0" PAST OPENING.
13. GROUT MASONRY SOLID BELOW EXTERIOR GRADE
14. LAP ALL SPLICED REINFORCEMENT 72 BAR DIAMETERS.
15. MINIMUM MASONRY PRISM STRENGTH (F'm) = 1,500 PSI AT 28 DAYS.
16. ALL UNITS SHALL BE LAID WITH FULL MORTAR COVERAGE ON HEAD, BED, WEBS, AND COLLAR JOINTS.
17. ALL TYPICAL VERTICAL WALL REINFORCEMENT SHALL BE LOCATED AT THE CENTER OF THE MASONRY WALL UNLESS NOTED OTHERWISE. PROVIDE BAR POSITIONERS FOR REINFORCEMENT NOT TIED.
18. ALL VERTICAL PIER REINFORCEMENT SHALL BE THE SIZE AND QUANTITY INDICATED IN THE PLANS. PROVIDE HALF THE QUANTITY ON EACH FACE OF WALL WITH 2 1/2" MASONRY COVER. UNLESS NOTED OTHERWISE.
19. ALL BEAM POCKETS AND JOIST POCKETS IN MASONRY WALLS SHALL BE FILLED SOLID WITH SOLID MASONRY OR CONCRETE.

STEEL LINTEL SCHEDULE

1. PROVIDE STEEL LINTELS IN ACCORDANCE WITH THE FOLLOWING SCHEDULE FOR ALL OPENINGS IN MASONRY WALLS.

   FOR 8" WALLS OR THICKER
   FOR OPENINGS LESS THAN 4'-0": L3 1/2x3 1/2x5/16
   FOR OPENINGS FROM 4'-0" TO LESS THAN 5'-0": L4x3 1/2x5/16 LLV.
   FOR OPENINGS FROM 5'-0" TO LESS THAN 6'-0": L5x3 1/2x5/16 LLV.
   FOR OPENINGS FROM 6'-0" TO LESS THAN 7'-0": L6x3 1/2x5/16 LLV.
   FOR OPENINGS FROM 7'-0" TO LESS THAN 10'-0": W8x18 + 5/16" BOT. PL.
2. ALL LINTELS IN EXTERIOR WALLS SHALL BE GALVANIZED.
3. ALL LINTELS SHALL HAVE A BEARING AT EACH END OF ONE INCH PER FOOT OF OPENING WITH A MINIMUM OF 6".
4. ALL ANGLE LINTELS SHALL HAVE 8" OF SOLID MASONRY OR MASONRY GROUTED SOLID BELOW BEARING END UNLESS NOTED OTHERWISE.
5. USE ONE ANGLE FOR EACH 4" WIDTH OF MASONRY.
6. LINTELS SHALL CONFORM TO A36 STEEL
7. BOTTOM PLATE ON BEAMS SHALL BE 1" LESS IN WIDTH THAN THE NOMINAL WALL THICKNESS, AND EXTEND FOR THE FULL LENGTH OF BEAM INCLUDING THE BEARING ENDS UNLESS NOTED OTHERWISE.
8. BOTTOM PLATES SHALL BE WELDED TO BEAM WITH A 1/4" FILLET WELD 3" LONG ON BOTH SIDES AT 9" ON CENTER, STAGGER PLACEMENT OF WELDS FROM SIDE TO SIDE.

STRUCTURAL STEEL

1. ALL STRUCTURAL STEEL WORK SHALL CONFORM TO THE REQUIREMENTS OF AISC SPECIFICATIONS (ASD) AND CODES OF STANDARD PRACTICE, AWS D1.1 (STRUCTURAL WELDING CODE – STEEL), AND THE THE CONTRACT DOCUMENTS.
2. THE LOCATION, SIZE AND CONDITION OF EXISTING STRUCTURES, EQUIPMENT, UTILITIES, SERVICES AND OTHER RELEVANT ENGINEERING FEATURES SHALL BE VERIFIED PRIOR TO FABRICATION OR ERECTION TO DETERMINE CLEARANCES, DIMENSIONS AND FABRICATION OR ERECTION PROCEDURES. ADEQUATE BRACING AND TEMPORARY SUPPORTS FOR THE STABILITY OF ALL EXISTING RELEVANT FEATURES SHALL BE PROVIDED BY THE CONTRACTOR.
3. STRUCTURAL STEEL: ASTM A36; SHAPES (EXCEPT WIDE FLANGE), PLATES, BARS, AND ROD
   ASTM A992, GRADE 50, WIDE FLANGE SHAPES
   ASTM A500, GRADE B, STEEL TUBING
   ASTM A53, TYPE E OR S, GRADE B, STEEL PIPE.
4. BOLTS: 3/4" DIAMETER MINIMUM, UNLESS NOTED OTHERWISE
   ASTM A325, TYPE 1, FOR ALL BEAM AND COLUMN CONNECTIONS. CONNECTIONS DESIGNED AS BEARING TYPE, WITH THREADS INCLUDED IN THE SHEAR PLANE.
   ASTM F1554 GRADE 36 FOR ALL ANCHOR RODS.
5. WELDING SHALL CONFORM WITH AWS E-70 ELECTRODES, MINIMUM.
6. PROVIDE ANGLE WALL ANCHORS, IN ACCORDANCE WITH PART 4, AISC MANUAL OF STEEL CONSTRUCTION, FOR BEAMS BEARING ON MASONRY WALLS. ANGLE ANCHORS SHALL BE WELDED TO BEAMS.
7. STEEL BEAMS SHALL BEAR A MINIMUM OF 8" ON MASONRY, UNLESS NOTED OTHERWISE.
8. CONNECTIONS: WELD OR BOLT CONNECTIONS, AS INDICATED.
   A. CONNECTIONS NOT DETAILED ON THE DRAWINGS SHALL CONFORM TO THE REQUIREMENTS OF THE AISC SPECIFICATIONS.
   B. WHERE THE REACTION VALUES OF BEAMS AND GIRDERS ARE NOT SHOWN ON THE DRAWINGS, THE CONNECTIONS SHALL BE DESIGNED TO SUPPORT THE END REACTION DERIVED FROM THE ALLOWABLE UNIFORM LOAD TABLE IN PART 2, NINTH EDITION, OF THE AISC ASD MANUAL OF STEEL CONSTRUCTION FOR THE GIVEN MEMBER SIZE, SPAN, AND YIELD STRENGTH.
   C. THE MINIMUM LENGTH OF CONNECTION ANGLES SHALL BE EQUAL TO ONE-HALF THE DEPTH OF THE MEMBER TO BE SUPPORTED
   D. ONE-SIDED CONNECTIONS WILL NOT BE PERMITTED.
   E. THE MINIMUM NUMBER OF BOLTS IN BOLTED CONNECTIONS SHALL BE 2.
   F. DO NOT FINAL WELD OR BOLT UNTIL MEMBERS ARE IN PROPER ALIGNMENT.
9. ANY MEMBER LOADS INDICATED ON THE DRAWINGS ARE SERVICE LOADS. CONNECTIONS SHALL BE DESIGNED AND DETAILED USING AISC ALLOWABLE STRESS DESIGN. A 1/3 STRESS INCREASE MAY NOT BE USED ON ANY MEMBER LOADS INDICATED.
10. MEMBER LOADS INDICATED +/– ARE MEMBERS THAT WILL ACT WITH EITHER TENSION OR COMPRESSION LOADS. DOUBLE ANGLES WITH LOADS INDICATED +/- SHALL BE DETAILED WITH INTERMITTENT FILLERS (STITCH FASTENERS OR WELDED FILLS) PER AISC SPECIFICATIONS.
11. NON-METALLIC, NON-SHRINK, NON-STAINING GROUT UNDER ALL COLUMN BASE PLATES AND BEAM BEARING PLATES SHALL CONSIST OF A PREMIXED PRODUCT COMPLYING WITH ALL REQUIREMENTS OF CRD-C621, ASTM C827, AND C109.

METAL ROOF AND FLOOR DECK

1. UNLESS OTHERWISE NOTED, FABRICATE AND FASTEN ALL DECK UNITS IN ACCORDANCE WITH THE CURRENT SPECIFICATION OF THE STEEL DECK INSTITUTE.
2. NO MECHANICAL, ELECTRICAL, OR OTHER EQUIPMENT SHALL BE SUSPENDED FROM THE METAL DECK.
3. ALL FLOOR DECK SHALL BE GALVANIZED, SEE SPECIFICATIONS. ALL ROOF DECK SHALL BE PAINTED.
4. DECK SHALL HAVE A MINIMUM YIELD STRESS OF 33 KSI.
5. MATERIAL FOR ROOF AND FLOOR DECK SHALL CONFORM WITH ASTM A611 GRADES C, D, OR E.
6. ROOF AND FLOOR DECK SHALL BE AS INDICATED ON THE DRAWINGS.
7. CLEAN AND TOUCH UP ALL WELDS WITH ZINC RICH PRIMER.
8. FASTENING FOR ROOF DECK SHALL BE PER THE ROOF DECK PLAN.

STEEL JOISTS

1. DESIGN, DETAIL, FABRICATE AND ERECT STEEL JOISTS IN CONFORMANCE WITH THE STEEL JOIST INSTITUTE SPECIFICATIONS AND ALL OTHER APPLICABLE SPECIFICATIONS REFERENCED THEREIN AND IN THE PROJECT DOCUMENTS.
2. STEEL JOISTS SHALL BE DESIGNED FOR THE NET UPLIFT FORCES INDICATED IN THE DESIGN LOADS.
3. PROVIDE STEEL JOIST END ANCHORAGE, BRIDGING, AND BRIDGING ANCHORAGE IN ACCORDANCE WITH STANDARD SPECIFICATIONS OF THE STEEL JOIST INSTITUTE, LATEST EDITION. WELD STEEL JOIST BEARING ENDS TO STEEL SUPPORTS OR BEARING PLATES.
4. NO MECHANICAL, ELECTRICAL, OR OTHER EQUIPMENT SHALL BE SUSPENDED FROM BRIDGING.
5. PROVIDE JOIST REINFORCING AT CONCENTRATED LOADS NOT LOCATED AT PANEL POINTS.
6. MAXIMUM TOTAL DEFLECTION OF A FULLY LOADED JOIST = SPAN/360.

LIGHT GAUGE METAL FRAMING

1. ALL LIGHT GAGE METAL FRAMING AND CONNECTIONS SHALL BE DESIGNED, FABRICATED, AND ERECTED IN ACCORDANCE WITH AISI "SPECIFICATIONS FOR THE DESIGN OF COLD FORMED STEEL STRUCTURAL MEMBERS" AND NAAMM ML/SFA 540, "LIGHTWEIGHT STEEL FRAMING SYSTEMS MANUAL."
2. ALL STRUCTURAL MEMBERS SHALL BE FORMED FROM CORROSION RESISTANT STEEL, ASTM A653-94, WITH A YIELD STRENGTH OF 33 KSI FOR MEMBERS 18 GAGE AND LIGHTER, AND 50 KSI FOR MEMBERS 16 GAGE AND HEAVIER.
3. ALL LIGHT GAGE MEMBERS AND ACCESSORIES SHALL BE ZINC COATED MEETING ASTM A924.
4. ALL CONNECTIONS ARE TO BE SCREWED WITH A MINIMUM OF (4) #12-14 CADMIUM PLATED SCREWS OR EQUIVALENT WELDS.
5. DIAGONAL STRAP BRACING SHALL BE CONNECTED TO ALL CROSSING MEMBERS.
6. WELDING SHALL BE DONE IN ACCORDANCE WITH AWS D1.3-89, STRUCTURAL WELDING CODE, SHEET STEEL.
7. SEQUENCING OF WELDS SHALL BE SUCH TO AVOID DISTORTION OF MEMBERS. REPLACE ALL MEMBERS WHICH ARE BURNED THROUGH OR DISTORTED DURING WELDING OPERATIONS.
8. PROVIDE CLIP ANGLES OR OTHER ACCESSORIES AS REQUIRED FOR A COMPLETE INSTALLATION.
9. CLEAN AND TOUCH UP ALL WELDS WITH ZINC RICH PRIMER.

DEFERRED STRUCTURAL SUBMITTALS

1. DRAWINGS AND CALCULATIONS FOR DEFERRED SUBMITTALS SHALL BE STAMPED BY AN ENGINEER REGISTERED IN THE STATE OF VIRGINIA AND SUBMITTED TO THE ENGINEER OF RECORD FOR APPROVAL PRIOR TO SUBMISSION TO THE BUILDING DEPARTMENT FOR REVIEW. DEFERRED SUBMITTALS SHALL INCLUDE THE FOLLOWING STRUCTURAL COMPONENTS:
   –PREFABRICATED STEEL JOISTS AND JOIST GIRDERS
   –LOAD BEARING LIGHT GAUGE FRAMING
   –PREFABRICATED LIGHT GAUGE TRUSSES

SPECIAL INSPECTIONS

1. SPECIAL INSPECTIONS IN ACCORDANCE WITH THE BUILDING CODE SHALL BE PROVIDED FOR THE FOLLOWING:
   –CONCRETE
   –BOLTS IN CONCRETE
   –REINFORCING STEEL
   –STRUCTURAL WELDING
   –HIGH STRENGTH BOLTING
   –STRUCTURAL MASONRY
   –EXPANSION AND EPOXY ANCHORS
   –EXCAVATION AND FILLING

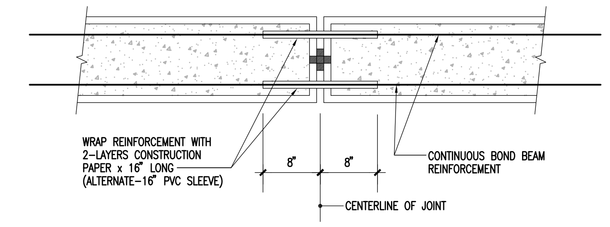

TYPICAL BOND BEAM AT CONTROL JOINT DETAIL
SCALE: 1"=1'-0"

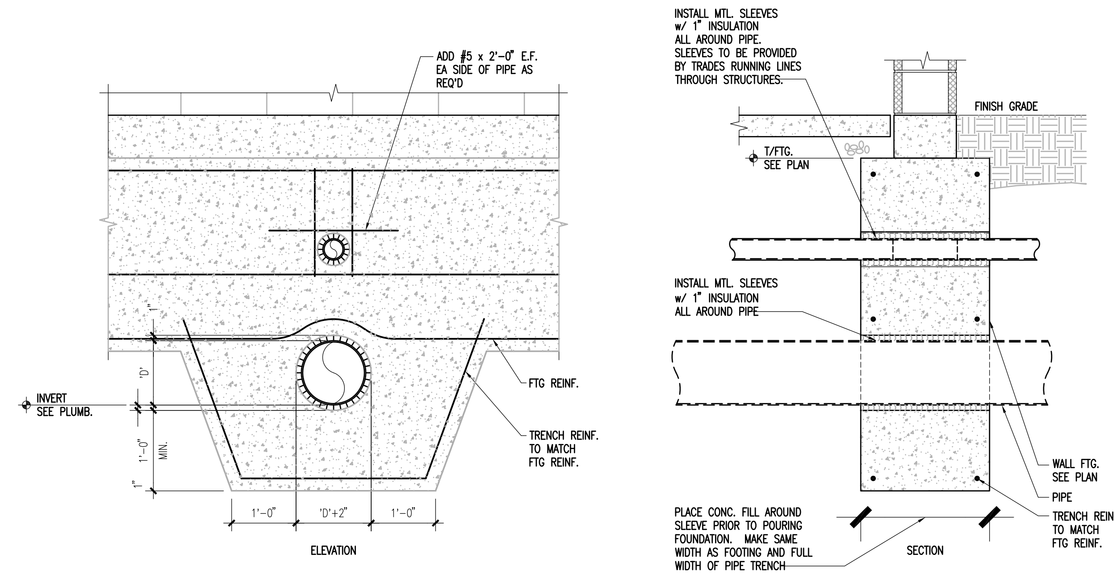

TYPICAL PIPE TRENCH DETAIL
SCALE: 3/4" = 1'-0"

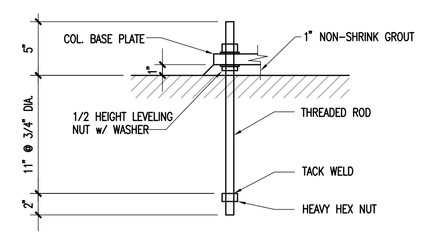

COLUMN ANCHOR RODS
SCALE: N.T.S.

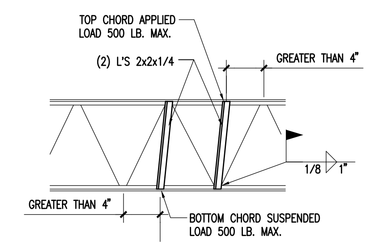

1) CONCENTRATED MECHANICAL UNIT LOADS, SUSPENDED LOADS, ETC., SHOULD BE LOCATED AT JOIST PANEL POINTS WHEREVER POSSIBLE. WHEN PANEL POINT IS NOT ACCESSIBLE, SUPPORT LOAD AS SHOWN.
2) ALL WELDING TO JOIST SHALL BE DONE WITH CARE SO AS NOT TO IMPAIR THE STRENGTH OF THE JOIST.

TYPICAL PANEL POINT REINF.
N.T.S.
TYPICAL SUPPORT OF CONCENTRATED LOADS, NOT AT JOIST PANEL POINTS AND OVER 80 LBS.

DATES AND REVISIONS

No.	Date/Description
	04.11.12 – BID

EXCHANGE™

RICHARD L. BOWEN + ASSOCIATES INC.
13000 Shaker Boulevard / Cleveland, Ohio 44120
Phone: (216) 491-9300 Fax: (216) 491-9053
www.rlba.com - email@rlba.com

FT. MYER EXCHANGE
JBMHH - MYER
ARLINGTON, VIRGINIA

GENERAL NOTES & TYPICAL DETAILS

DRAWN BY: NTM
CHECKED BY: DET
RLB NO.: 7800.02

DRAWING NO.
S1.00

P:\7800\7800.02 FT. MYER PX IMAGE UPGRADE CONST. CONTRACT DOCS\STRUCT\780002-S01-00.DWG | PLOTTED 04.09.2012 10:46AM BY RYAN VANJO

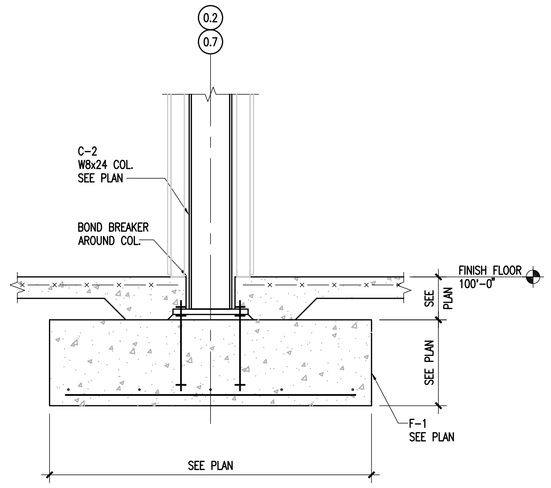

3 S2.00 WALL SECTION
SCALE: 3/4" = 1'-0"

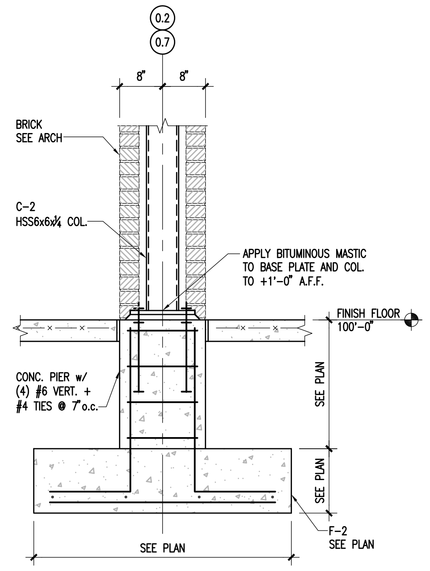

4 S2.00 SECTION
SCALE: 3/4" = 1'-0"

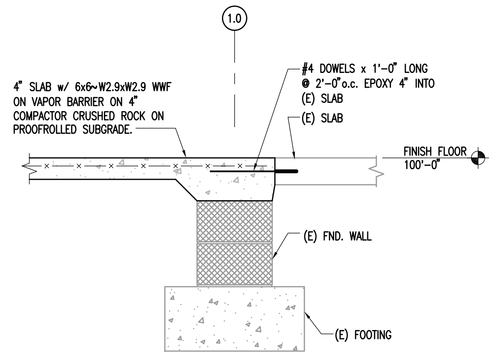

5 S2.00 SECTION
SCALE: 3/4" = 1'-0"

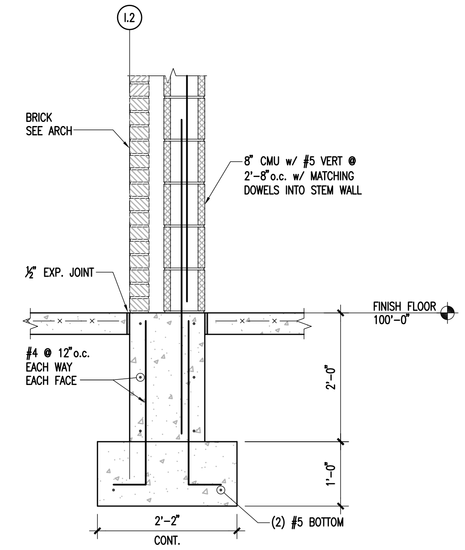

6 S2.00 SECTION
SCALE: 3/4" = 1'-0"

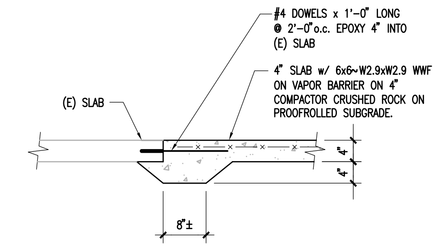

7 S2.00 SECTION @ TYP SLAB REPAIR INFILL
SCALE: 3/4" = 1'-0"

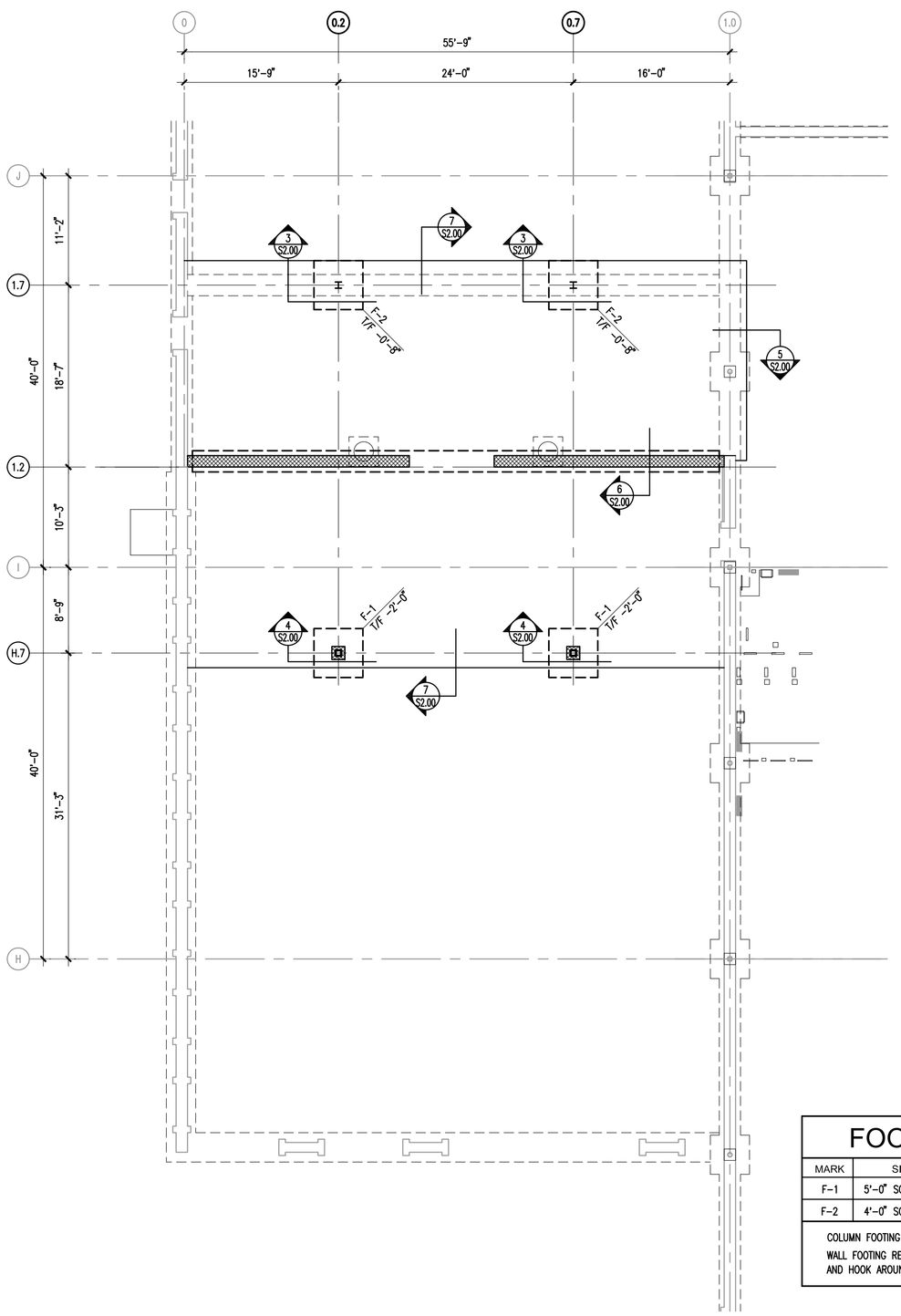

1 S2.00 PARTIAL FOUNDATION PLAN
SCALE: 1/8" = 1'-0"

0 1' 2' 4' 8'
N
TRUE NORTH

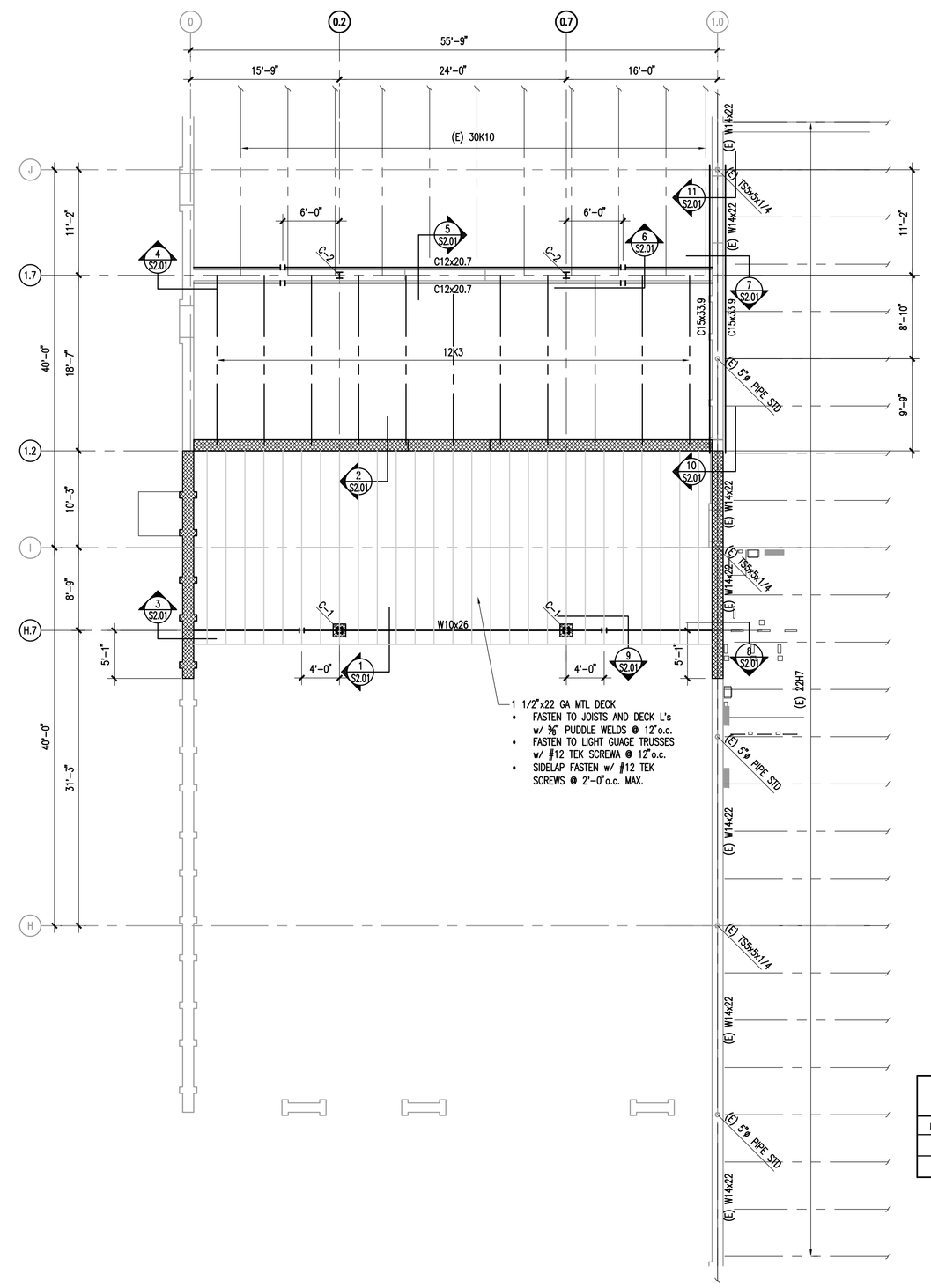

2 S2.00 PARTIAL ROOF FRAMING PLAN
SCALE: 1/8" = 1'-0"

0 1' 2' 4' 8'
N
TRUE NORTH

FOOTING SCHEDULE

MARK	SIZE	REINFORCING	REMARKS
F-1	5'-0" SQ. x 1'-4"	(5) #5 E.W.B.	REINFORCING 3" FROM BOTTOM OF FOOTING
F-2	4'-0" SQ. x 1'-0"	(4) #5 E.W.B.	" "

COLUMN FOOTING THICKNESS TO MATCH WALL FOOTING IF INTEGRAL

WALL FOOTING REINFORCEMENT TO RUN CONTINUOUS THRU COLUMN FOOTINGS AND HOOK AROUND CORNERS MIN. 48 BAR DIAMETERS.

COLUMN SCHEDULE

MARK	SIZE	BASE PLATE	ANCHOR RODS
C-1	HSS6x6x1/4	12"x3/4"x1'-0"	(4) 3/4"ø
C-2	W8x24	14"x3/4"x1'-2"	(4) 3/4"ø

DATES AND REVISIONS

No.	Date/Description
	04.11.12 – BID

EXCHANGE™

RICHARD L. BOWEN + ASSOCIATES INC.
ARCHITECTS • ENGINEERS • CONSTRUCTION MANAGERS
13000 Shaker Boulevard / Cleveland, Ohio 44120
Phone: (216) 491-9300 Fax: (216) 491-8053
www.rlba.com • email@rlba.com

FT. MYER EXCHANGE
JBMHH - MYER
ARLINGTON, VIRGINIA

FOUNDATION PLAN, ROOF FRAMING PLAN & FOUNDATION SECTIONS

DRAWN BY: NTM
CHECKED BY: DET
RLB NO.: 7800.02

DRAWING NO.
S2.00

P:\7800\7800.02 FT. MYER PX IMAGE UPGRADE CONST. CONTRACT DOCS\STRUCT\780002_S02-00.DWG | PLOTTED 04.09.2012 10:46AM BY RYAN VANJO

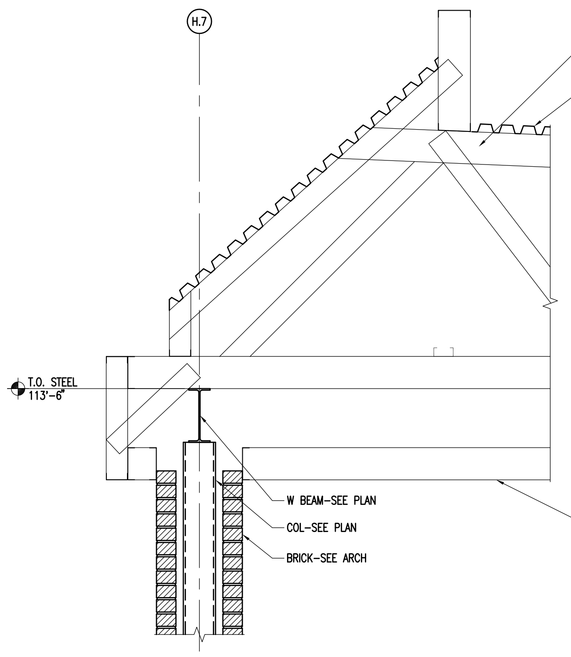

1 SECTION
S2.01 SCALE: 3/4" = 1'-0"

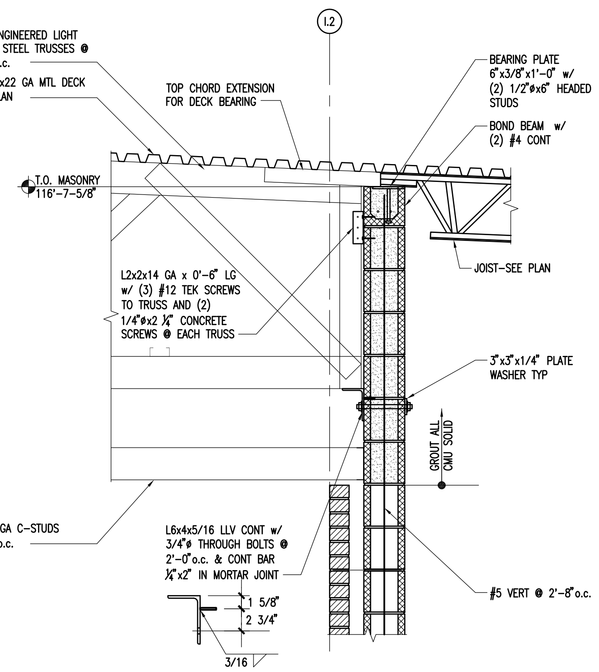

2 SECTION
S2.01 SCALE: 3/4" = 1'-0"

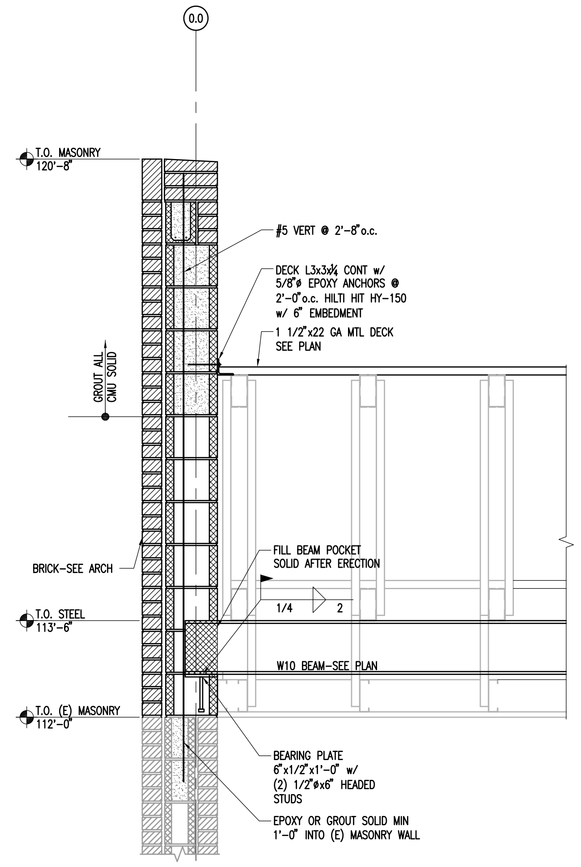

3 SECTION
S2.01 SCALE: 3/4" = 1'-0"

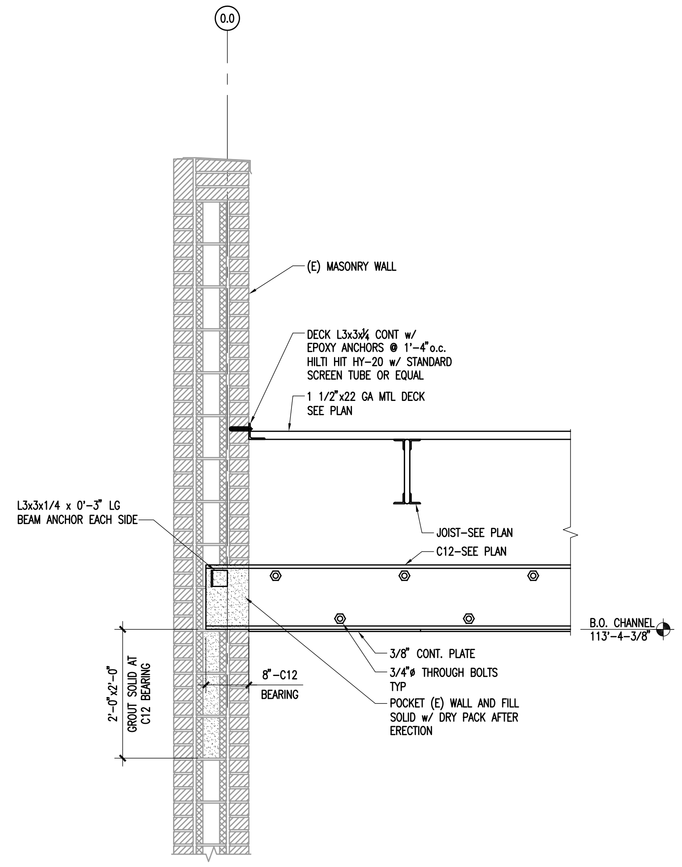

4 SECTION
S2.01 SCALE: 3/4" = 1'-0"

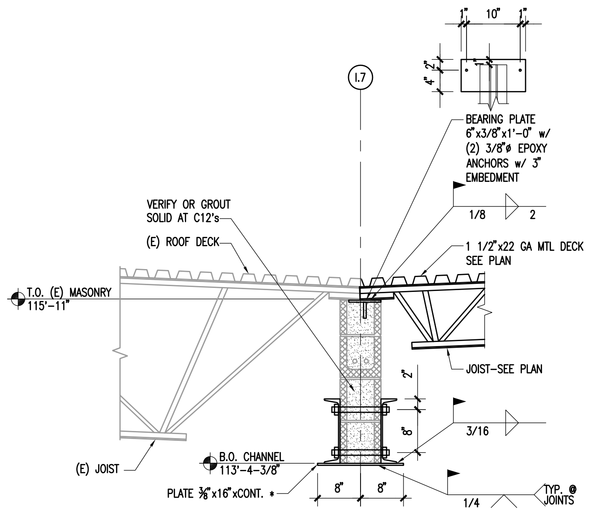

* ERECT IN CONVENIENT SEGMENTS UP TO 2'-8" LONG.

5 SECTION
S2.01 SCALE: 3/4" = 1'-0"

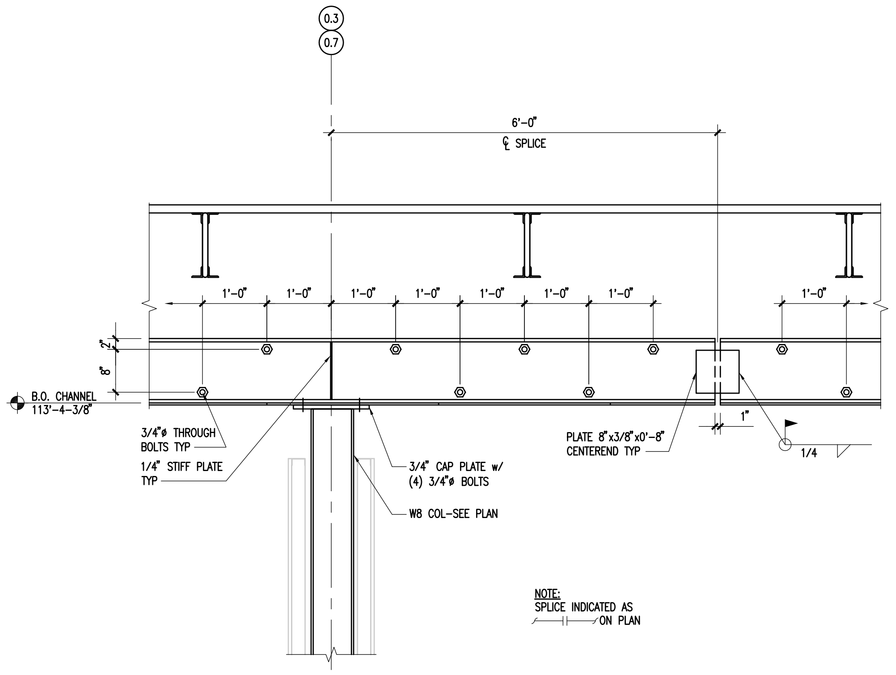

6 SECTION
S2.01 SCALE: 3/4" = 1'-0"

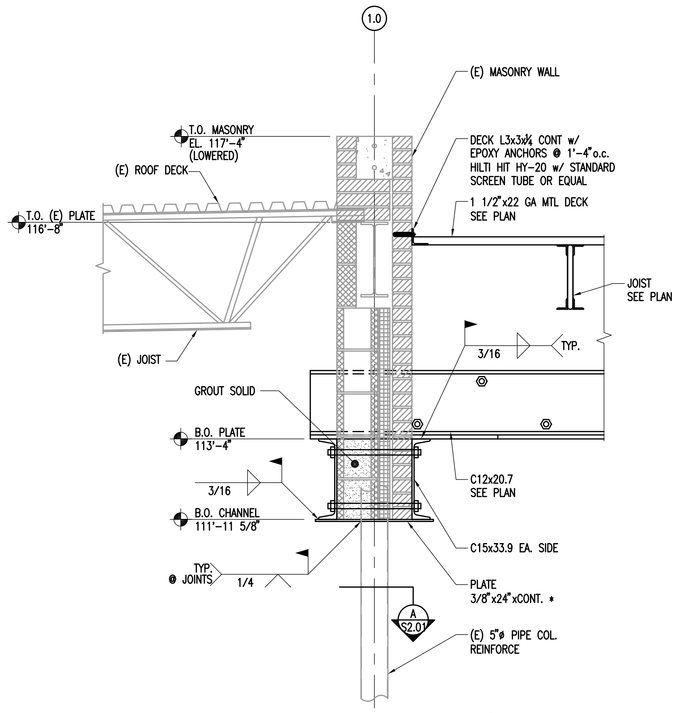

* ERECT IN CONVENIENT SEGMENTS UP TO 2'-8" LONG.

7 SECTION
S2.01 SCALE: 3/4" = 1'-0"

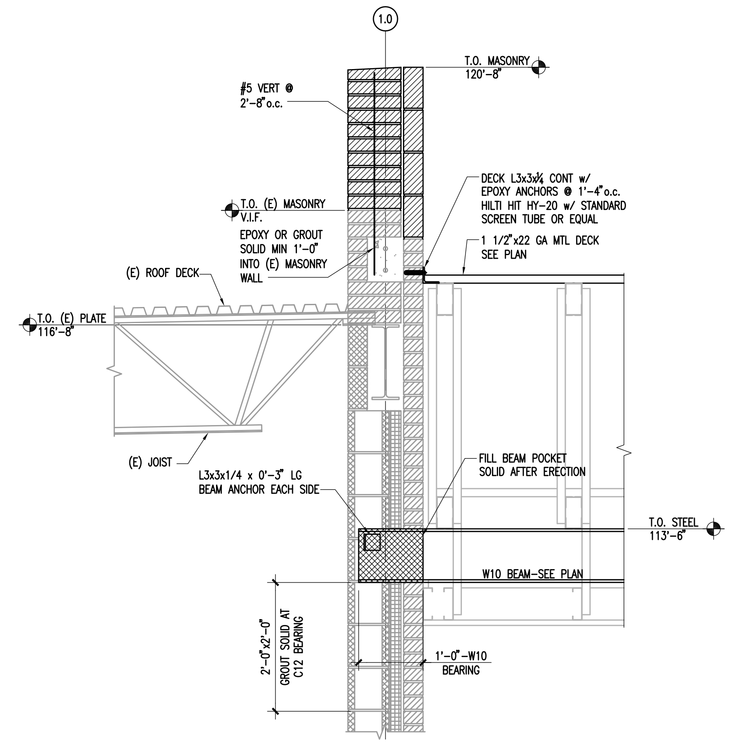

8 SECTION
S2.01 SCALE: 3/4" = 1'-0"

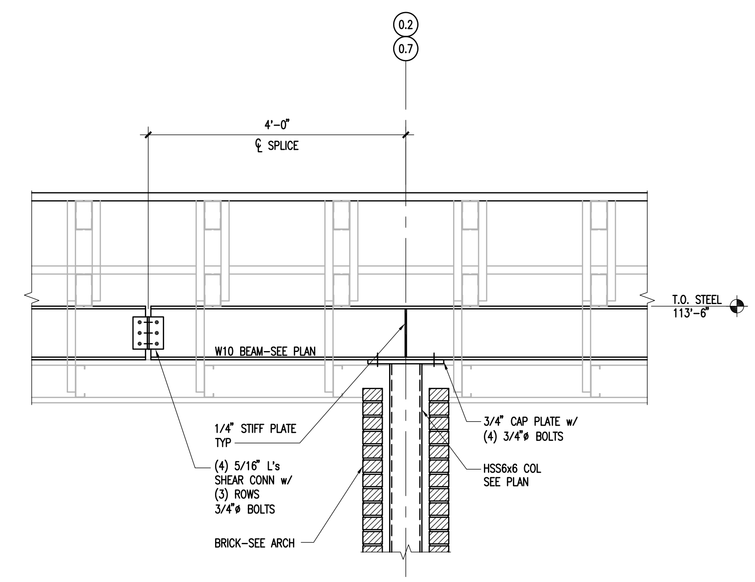

9 SECTION
S2.01 SCALE: 3/4" = 1'-0"

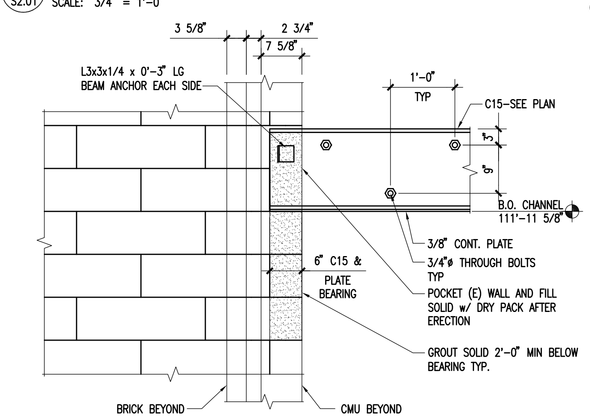

10 SECTION
S2.01 SCALE: 3/4" = 1'-0"

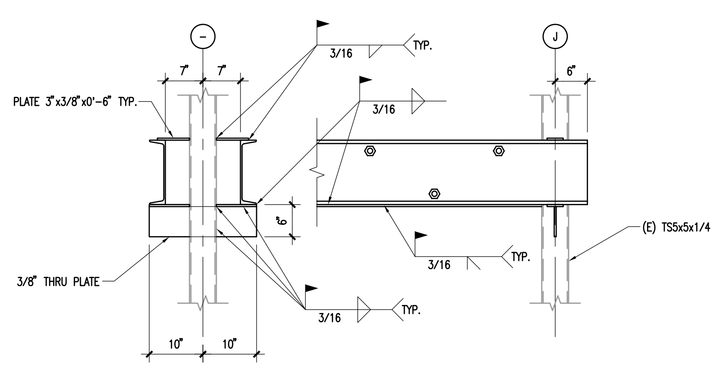

NOTE:
CMU NOT SHOWN
REMOVE AND PATCH AS REQ'D

11 SECTION
S2.01 SCALE: 3/4" = 1'-0"

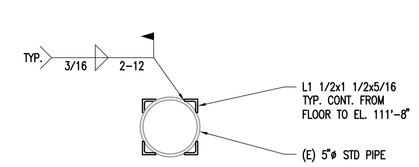

A DETAIL - COL. REINF.
S2.01 SCALE: 1 1/2" = 1'-0"

DATES AND REVISIONS

No.	Date/Description
	04.11.12 – BID

EXCHANGE™

RICHARD L. BOWEN + ASSOCIATES INC.
13000 Shaker Boulevard | Cleveland, Ohio 44120
Phone: (216) 491-5300 Fax: (216) 491-8053
www.rlba.com - email@rlba.com

FT. MYER EXCHANGE
JBMHH - MYER
ARLINGTON, VIRGINIA

ROOF FRAMING SECTIONS

DRAWN BY: NTM
CHECKED BY: DET
RLB NO.: 7800.02

DRAWING NO.
S2.01

P:\7800\7800.02 FT. MYER PX IMAGE UPGRADE CONST. CONTRACT DOCS\STRUCT\780002_S02-01.DWG | PLOTTED 04.09.2012 10:47AM BY RYAN VANJO

DEMOLITION NOTES

A. COORDINATE PLUMBING DEMOLITION WORLK WITH OTHER TRADES.

B. IN THE INSTALLATION OR REMOVAL OF ANY PART OF DRAINAGE SYSTEM, DEAD ENDS SHALL BE PROHIBITED.

C. PATCH FLOOR, WALL, AND CEILING TO MATCH EXISTING AT ANY DEMOLITION WORK.

D. PROVIDE SUPPORTS, INSULATION FOR ALL EXISTING PIPING AS NEDDED.

E. REMOVE ALL ABANDONED PIPING BACK TO MAIN AND CAP.

CODED NOTES

1. REMOVE EXISTING WC. EXISTING SANITARY, VENT, AND CW TO REMAIN FOR NEW FIXTURE.
2. REMOVE EXISTING UR. EXISTING SANITARY, VENT, AND CW TO REMAIN FOR NEW FIXTURE.
3. REMOVE EXISTING LAV. EXISTING SANITARY, VENT, HW AND CW TO REMAIN FOR NEW FIXTURE.
4. EXISTING MOP BASIN TO REMAIN.
5. REMOVE EXISTING 3-COMPARTMENT SINK.
6. EXISTING FD TO REMAIN.
7. EXISTING WCO TO REMAIN.
8. REMOVE EXISTING EWC. EXISTING SANITARY, VENT AND CW TO REMAIN FOR NEW FIXTURE.
9. EXISTING FCO TO REMAIN.
10. EXISTING WH TO REMAIN.
11. REMOVE EXISTING FIXTURE WITH ASSOCIATED PIPING. CUT AND CAP SANITARY PIPING BELOW FLOOR. REMOVE EXISTING HOT WATER, COLD WATER AND VENT PIPING BACK TO MAIN AND CAP.
    PATCH FLOOR TO MATCH EXISTING.
12. EXISTING MECHANICAL EQUIPMENT TO REMAIN.
13. EXISTING FIXTURES TO REMAIN.

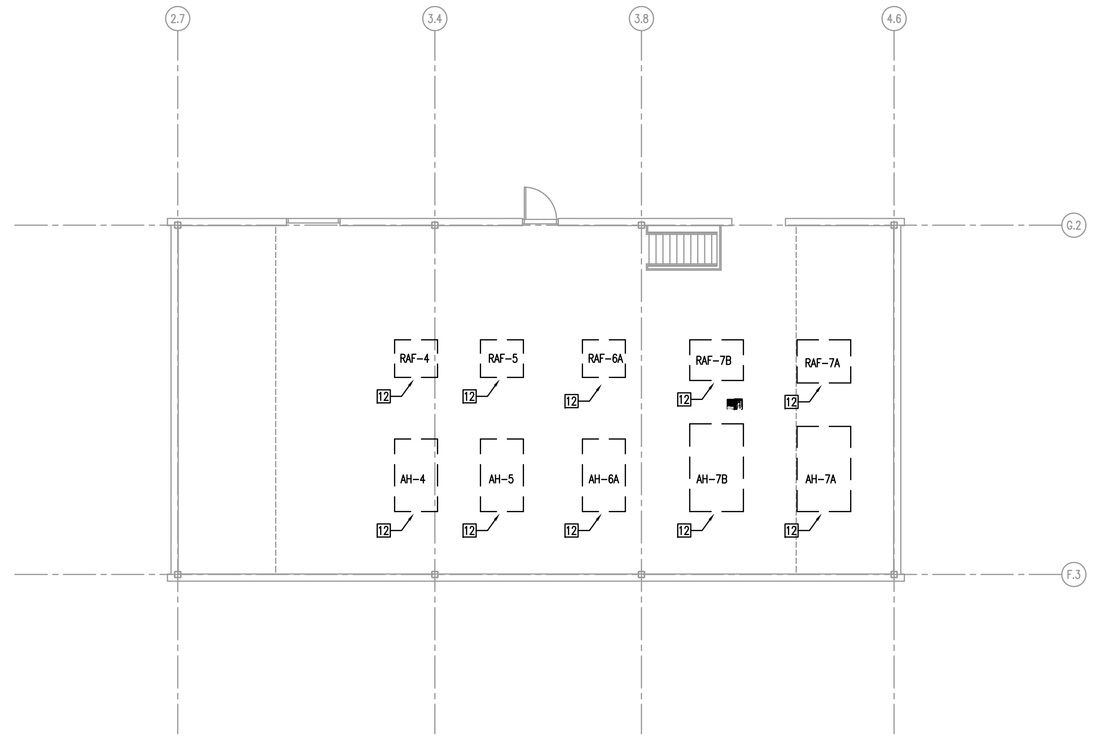

2 PD1.1 MECHANICAL PENTHOUSE PLUMBING DEMOLITION PLAN
SCALE: 1/8" = 1'-0"
0 1' 2' 4' 8'
N TRUE NORTH

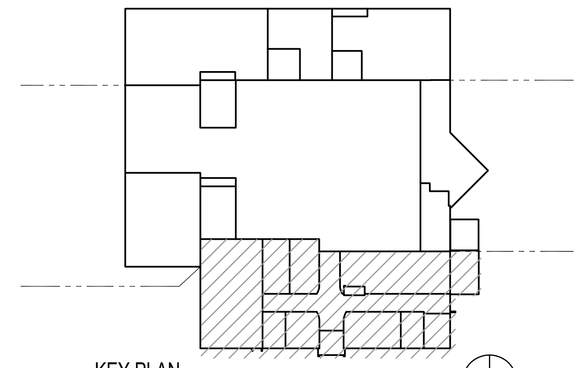

KEY PLAN
SCALE: N.T.S.
N TRUE NORTH

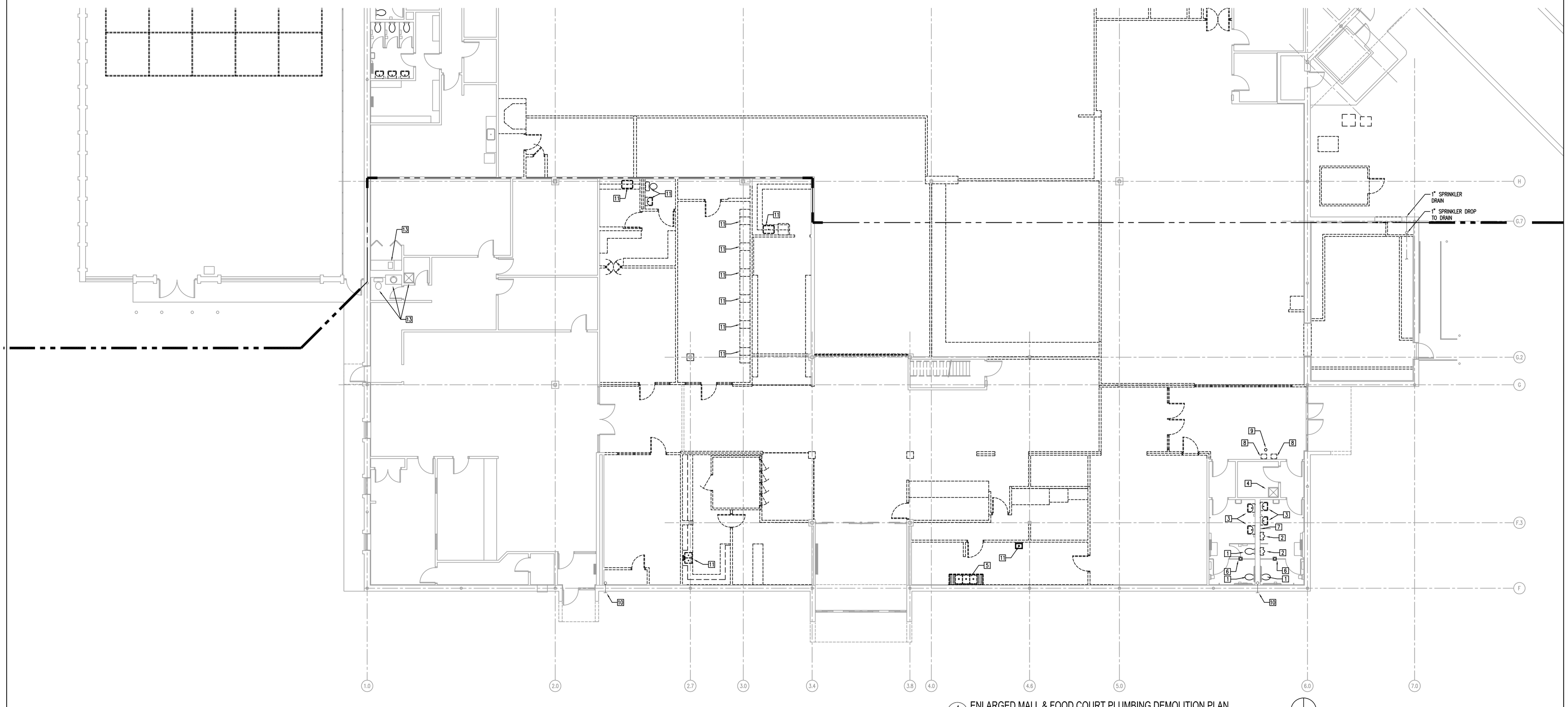

1 PD1.1 ENLARGED MALL & FOOD COURT PLUMBING DEMOLITION PLAN
SCALE: 1/8" = 1'-0"
0 1' 2' 4' 8'
N TRUE NORTH

DATES AND REVISIONS

No.	Date/Description
	04.11.12 – BID

EXCHANGE™

RICHARD L. BOWEN + ASSOCIATES INC.
ARCHITECTS • ENGINEERS • CONSTRUCTION MANAGERS
13000 Shaker Boulevard / Cleveland, Ohio 44120
Phone: (216) 491-5300 Fax: (216) 491-5053
www.rlba.com - email@rlba.com

FT. MYER EXCHANGE
JBMHH - MYER
ARLINGTON, VIRGINIA

PLUMBING DEMOLITION PLAN (1 OF 3)

DRAWN BY: KAF
CHECKED BY: KAF
RLB NO.: 7800.02

DRAWING NO.
PD1.1

P:\7800\7800.02 FT. MYER PX IMAGE UPGRADE CONST. CONTRACT DOCS\MECH\7800.02_PD01-01.DWG | PLOTTED 04.09.2012 09:25AM BY MIKHAIL ALEKSEYEV

DEMOLITION NOTES

REFER TO DRAWING PD1.1 FOR DEMOLITION NOTES.

CODED NOTES

1. REMOVE EXISTING FIXTURE. EXISTING DRAIN VENT, COLD AND HOT WATER PIPING TO REMAIN FOR CONNECTION TO NEW FIXTURES.
2. REWORK EXISTING MOP BASIN SANITARY TO PROVIDE HUB DRAIN FOR CONDENSATE DRAIN DISCHARGE. REFER TO DRAWING P1.2.
3. REFRIGERATION EQUIPMENT. REFER TO ARCHITECTURAL DRAWINGS.
4. EXISTING FLOOR DRAIN TO REMAIN.
5. EXISTING FCO TO REMAIN.
6. EXISTING WALL HYDRANT TO REMAIN.
7. REMOVE EXISTING FIXTURE. CUT AND CAP SANITARY PIPING BELOW FLOOR. REMOVE EXISTING HOT WATER, COLD WATER AND VENT PIPING BACK TO MAIN AND CAP. PATCH FLOOR/WALL TO MATCH EXISTING.
8. EXISTING MECHANICAL EQUIPMENT TO REMAIN.
9. REMOVE EXISTING CANOPY STORM DRAIN VERTICAL PIPE. REWORK UNDERGROUND PIPING AS REQUIRED FOR NEW CONNECTION. REFER TO SHEET P1.2.

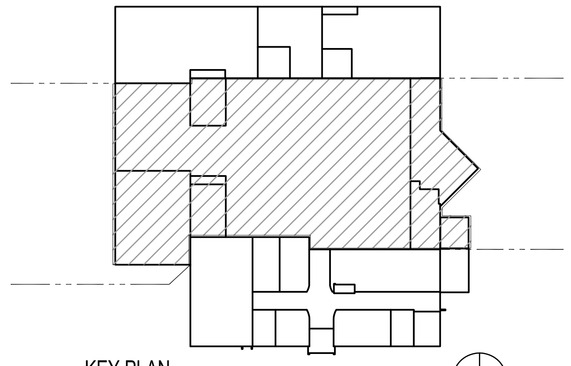

KEY PLAN

SCALE: N.T.S.

TRUE NORTH

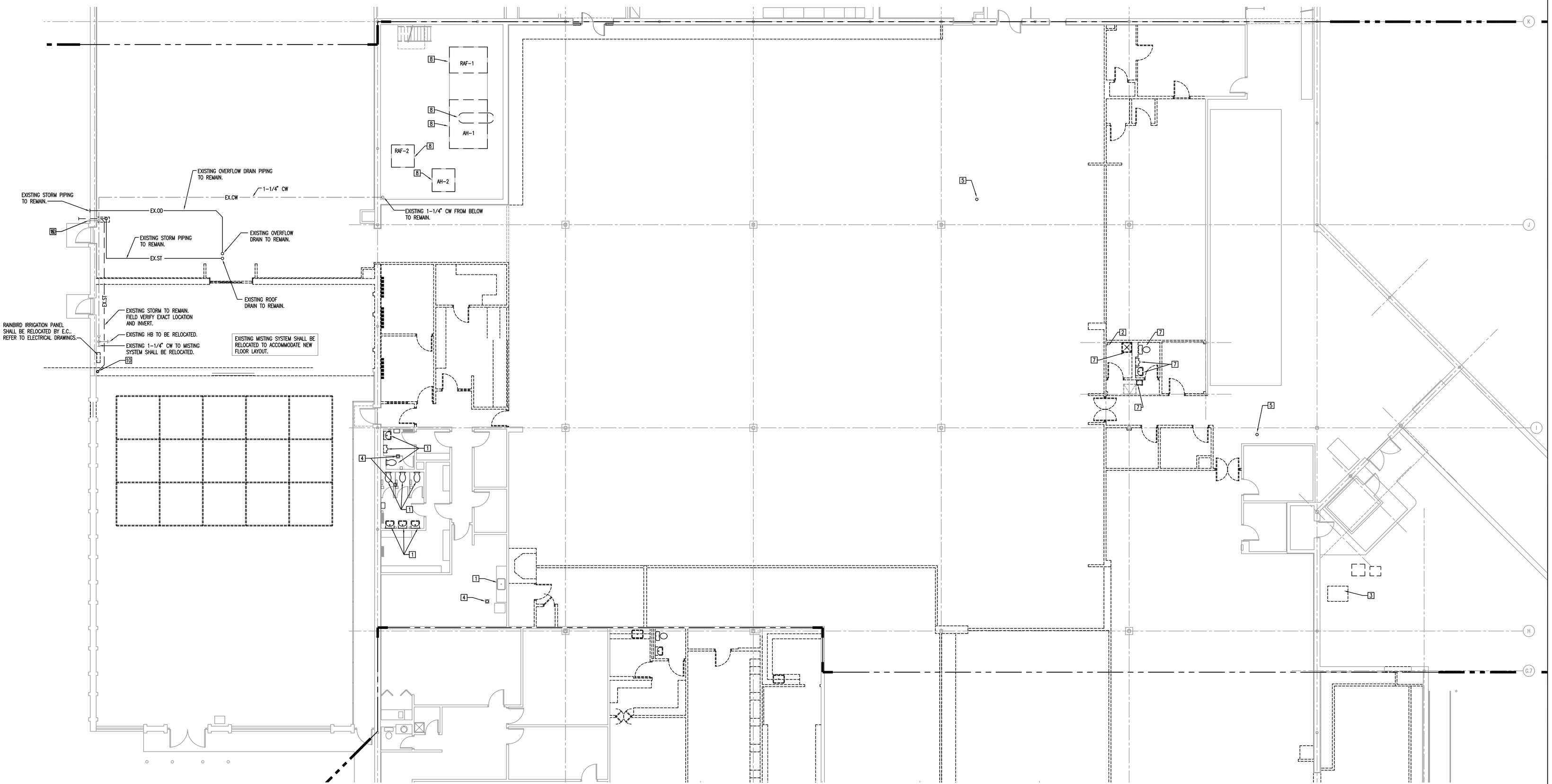

1 / PD1.2 ENLARGED RETAIL SALES AREA PLUMBING DEMOLITION PLAN

SCALE: 1/8" = 1'-0"

0 1' 2' 4' 8'

TRUE NORTH

DATES AND REVISIONS	
No.	Date/Description
	04.11.12 – BID

EXCHANGE™

RICHARD L. BOWEN + ASSOCIATES INC.
ARCHITECTS • ENGINEERS • CONSTRUCTION MANAGERS
13000 Shaker Boulevard / Cleveland, Ohio 44120
Phone: (216) 491-9300 Fax: (216) 491-9053
www.rlba.com - email@rlba.com

FT. MYER EXCHANGE
JBMHH - MYER
ARLINGTON, VIRGINIA

PLUMBING DEMOLITION PLAN (2 OF 3)

DRAWN BY:	KAF
CHECKED BY:	KAF
RLB NO.:	7800.02

DRAWING NO.

PD1.2

P:\7800\7800.02 FT. MYER PX IMAGE UPGRADE CONST. CONTRACT DOCS\MECH\7800.02_PD01-02.DWG | PLOTTED 04.09.2012 09:25AM BY MIKHAIL ALEKSEYEV

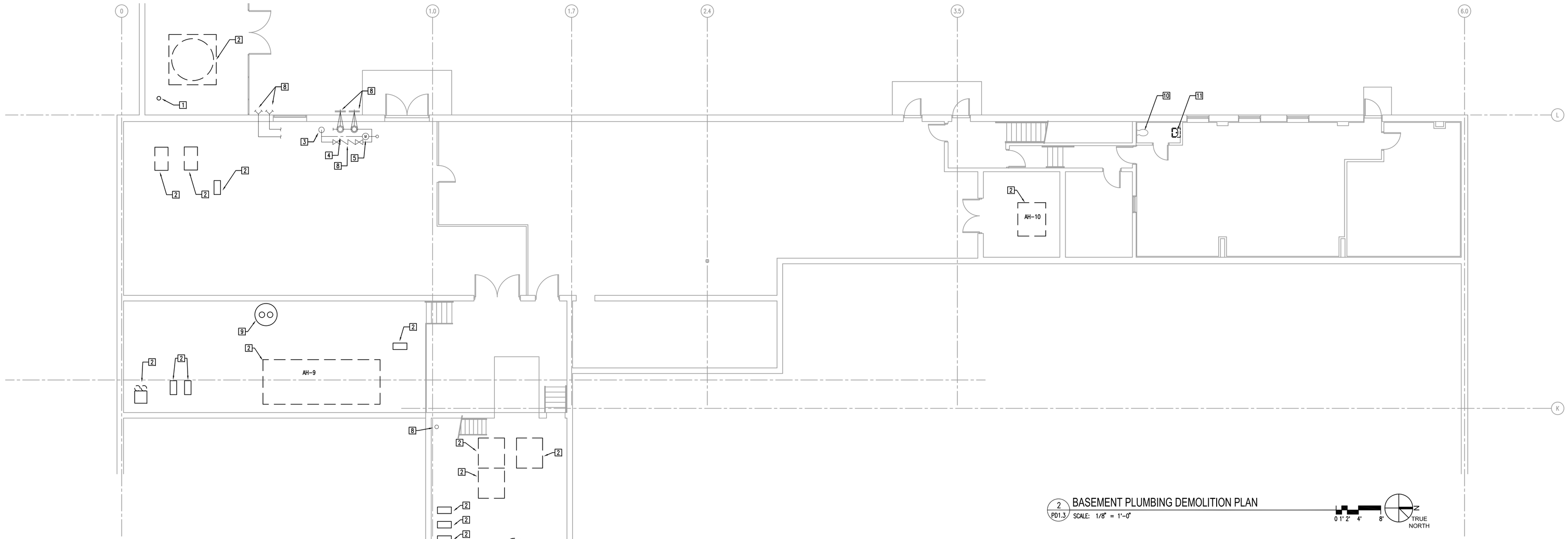

2 PD1.3 BASEMENT PLUMBING DEMOLITION PLAN
SCALE: 1/8" = 1'-0"

0 1' 2' 4' 8'
TRUE NORTH

DEMOLITION NOTES

REFER TO DRAWING PD1.1 FOR DEMOLITION NOTES.

CODED NOTES

1. EXISTING CLEANOUT TO REMAIN.
2. EXISTING MECHANICAL EQUIPMENT TO REMAIN.
3. EXISTING INCOMING 8" COMBINED SERVICE TO REMAIN.
4. EXISTING 3" DOMESTIC CW TEE OFF INCOMING 8" COMBINED SERVICE TO REMAIN.
5. EXISTING DOMESTIC WATER METER TO REMAIN.
6. EXISTING LOCHINVAR 'KNIGHT' WATER HEATER TO REMAIN.
7. EXISTING LOCHINVAR HOT WATER STORAGE TANK TO REMAIN.
8. EXISTING FIRE PROTECTION APPURTENANCE TO REMAIN.
9. EXISTING SEWAGE EJECTOR TO REMAIN.
10. REMOVE EXISTING FIXTURE. EXISTING ROUGH-IN TO REMAIN.
11. REMOVE EXISTING LAVATORY. REUSE ROUGH-IN FOR NEW LAVATORY.

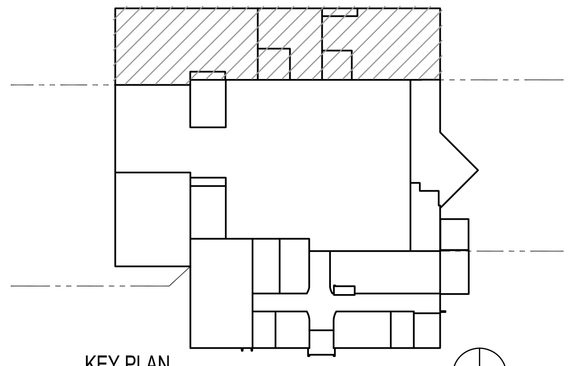

KEY PLAN
SCALE: N.T.S.

TRUE NORTH

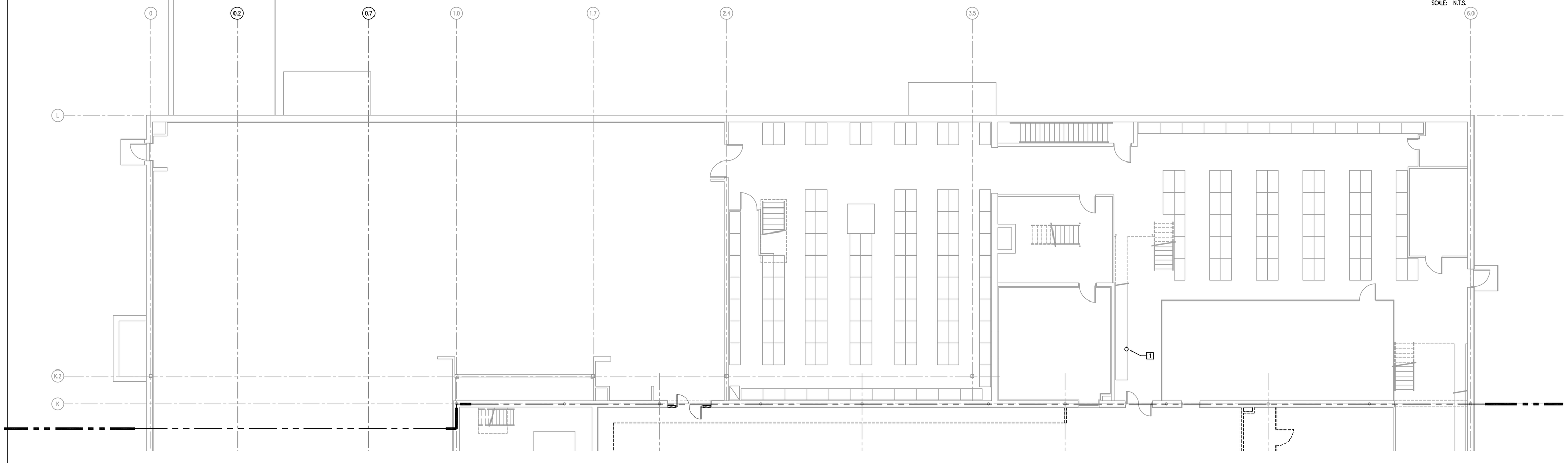

1 PD1.3 ENLARGED MCSS & MPA PLUMBING DEMOLITION PLAN
SCALE: 1/8" = 1'-0"

0 1' 2' 4' 8'
TRUE NORTH

DATES AND REVISIONS	
No.	Date/Description
	04.11.12 – BID

EXCHANGE™

RICHARD L. BOWEN + ASSOCIATES INC.
13000 Shaker Boulevard / Cleveland, Ohio 44120
Phone: (216) 491-0300 Fax: (216) 491-8053
www.rlba.com - email@rlba.com

FT. MYER EXCHANGE
JBMHH - MYER
ARLINGTON, VIRGINIA

PLUMBING DEMOLITION PLAN (3 OF 3)

DRAWN BY: KAF
CHECKED BY: KAF
RLB NO.: 7800.02

DRAWING NO.
PD1.3

P:\7800\7800.02 FT. MYER PX IMAGE UPGRADE CONST. CONTRACT DOCS\MECH\7800.02_PD01-03.DWG | PLOTTED 04.09.2012 09:25AM BY MIKHAIL ALEKSEYEV

PLUMBING SYMBOLS & ABBREVIATIONS

SYMBOL	DESCRIPTION
	BACKFLOW PREVENTER
	CHECK VALVE
	PRESSURE REDUCING VALVE
	SHUT OFF VALVE
	STRAINER W/BLOWDOWN
	UNION
	EXISTING PIPING
	EXISTING PIPING TO BE REMOVED
	REMOVE TO POINT AND CAP
	REMOVE TO POINT FOR RECONNECTION
CO	CLEANOUT IN FLOOR OR AT GRADE
CO	CLEANOUT IN SUSPENDED PIPE
WCO	CLEANOUT IN WALL
	FLOOR DRAIN
	PIPE BRANCH TAKE-OFF FROM BOTTOM
	PIPE BRANCH TAKE-OFF FROM TOP
	PIPE DROP
	PIPE RISE
	ROOF DRAIN/SANITARY VENT
ST	ROOF DRAIN ABOVE
V	VENT THRU ROOF
	HOSE BIB
	PRESSURE GAUGE
	TEMPERATURE AND PRESSURE RELIEF VALVE
	TEMPERING VALVE
	THERMOMETER
	SQUARE FEET
CW	COLD WATER PIPING
G	GAS PIPING
OST	OVERFLOW STORM PIPING
PD	PUMP DISCHARGE PIPING
RHW	RECIRCULATING HOT WATER PIPING
SAN	SANITARY SEWER (ABOVE GROUND)
SAN	SANITARY SEWER (UNDERGROUND/UNDERFLOOR)
ST	STORM SEWER (ABOVE GROUND)
ST	STORM SEWER (UNDERGROUND/UNDERFLOOR)
TW	TEMPERED WATER PIPING
V	VENT PIPING
120° HW	120°F HOT WATER PIPING

PLUMBING SYMBOLS & ABBREVIATIONS

SYMBOL	DESCRIPTION
AFF	ABOVE FINISHED FLOOR
BFP	BACKFLOW PREVENTER
CEIL	CEILING
CI	CAST IRON
CO	CLEANOUT
CTE	CONNECT TO EXISTING
DS	DOWNSPOUT (BUILDING EXTERIOR)
DWH	DOMESTIC WATER HEATER
EC	ELECTRICAL CONTRACTOR
EL	ELEVATION
ETR	EXISTING TO REMAIN
EWC	ELECTRIC WATER COOLER
FD	FLOOR DRAIN
FPC	FIRE PROTECTION CONTRACTOR
FPHB	FROSTPROOF HOSE BIB
HB	HOSE BIB
HD	HUB DRAIN
INV	INVERT
IW	INDIRECT WASTE
L	LAVATORY
LT	LAUNDRY TUB
MB	MOP BASIN
MC	MECHANICAL CONTRACTOR
PC	PLUMBING CONTRACTOR
PVC	POLYVINYL CHLORIDE
RD	ROOF DRAIN
REX	REMOVE EXISTING
RR	REMOVE AND RELOCATE
S	SINK
SH	SHOWER
SW	SAFE WASTE
TPV	TRAP PRIMER VALVE
U	URINAL
VTR	VENT THRU ROOF
WC	WATER CLOSET

BARBER SHOP EQUIPMENT PLUMBING SCHEDULE

ITEM NO.	DESCRIPTION	MANUFACTURER	MODEL NUMBER	FURNISHED BY:	INSTALLED BY:	PLUMBING CW	PLUMBING HW	PLUMBING DRAIN	PLUMBING VENT	PLUMBING GAS	PLUMBING BTU'S	REMARKS
BS02	BARBER SINK WITH FAUCET AND MIXING VALVE	RTS	RTS	AF	AI	½"	½" (90°F)	2"	1-1/2"	–	–	PROVIDE HT-1 & MV-1 (SET TEMP. AT 90°F)

ANTHONY'S PIZZA EQUIPMENT PLUMBING SCHEDULE

ITEM NO.	DESCRIPTION	MANUFACTURER	MODEL NUMBER	FURNISHED BY:	INSTALLED BY:	PLUMBING CW	PLUMBING HW	PLUMBING DRAIN	PLUMBING VENT	PLUMBING GAS	PLUMBING BTU'S	REMARKS
–	THERE ARE NO PLUMBING FIXTURES/EQUIPMENT IN THE SPACE	–	–	–	–		–	–	–	–	–	–

CHARLEY'S SUBS EQUIPMENT PLUMBING SCHEDULE

ITEM NO.	DESCRIPTION	MANUFACTURER	MODEL NUMBER	FURNISHED BY:	INSTALLED BY:	PLUMBING CW	PLUMBING HW	PLUMBING DRAIN	PLUMBING VENT	PLUMBING GAS	PLUMBING BTU'S	REMARKS
K10	BEVERAGE DISPENSER	RTS	RTS	AF	AI		–	–	–	–	–	PROVIDE SHUT-OFF VALVE & BFP-1

DUNKIN DONUTS EQUIPMENT SCHEDULE

ITEM NO.	DESCRIPTION	MANUFACTURER	MODEL NUMBER	FURNISHED BY:	INSTALLED BY:	PLUMBING CW	PLUMBING HW	PLUMBING DRAIN	PLUMBING VENT	PLUMBING GAS	PLUMBING BTU'S	REMARKS
96	EXPRESSO MACHINE	RTS	RTS	–	–	–	–	–	–	–	–	FILTERED WATER PROVIDE BFP-1
101P-3	AXIOM TWIN COFFEE BREWER	RTS	RTS	–	–	–	–	–	–	–	–	FILTERED WATER PROVIDE BFP-1
101PP-3	AXIOM SINGLE COFFEE BREWER	RTS	RTS	–	–	–	–	–	–	–	–	FILTERED WATER BFP-1
107A	DUNKACCINO MACHINE	RTS	RTS	–	–	–	–	–	–	–	–	FILTERED WATER PROVIDE BFP-1
112	COOLATTA MACHINE	RTS	RTS	–	–	–	–	–	–	–	–	FILTERED WATER PROVIDE BFP-1
200A	ICED COFFEE BREWER MACHINE	RTS	RTS	–	–	–	–	–	–	–	–	FILTERED WATER
201B	ICED COFFEE BREWER MACHINE	RTS	RTS	–	–	–	–	–	–	–	–	FILTERED WATER PROVIDE BFP-1
395	HAND SINK WITH FAUCET	RTS	RTS	–	–	–	–	–	–	–	–	PROVIDE MV-1 MIXING VALVE
434A	(3) COMPARTMENT SINK WITH FAUCET	RTS	RTS	–	–	–	–	–	–	–	–	INDIRECT CONN. TO FS
496	ICE MACHINE	RTS	RTS	–	–	–	–	–	–	–	–	INDIRECT CONN. TO FD

SODA FOUNTAIN EQUIPMENT PLUMBING SCHEDULE

ITEM NO.	DESCRIPTION	MANUFACTURER	MODEL NUMBER	FURNISHED BY:	INSTALLED BY:	PLUMBING CW	PLUMBING HW	PLUMBING DRAIN	PLUMBING VENT	PLUMBING GAS	PLUMBING BTU'S	REMARKS
DS2	ICE TEA BREWER	RTS	RTS	AF	CI		–	–	–	–	–	PROVIDE BFP-1
DS3	COFFEE BREWER SYSTEM	RTS	RTS	AF	CI		–	–	–	–	–	PROVIDE BFP-1
DS4	BEVERAGE DISPENSER	RTS	RTS	AF	CI		–	–	–	–	–	PROVIDE BFP-1
	ICE MACHINE	RTS	RTS	AF	CI		–	–	–	–	–	PROVIDE BFP-1 & WATER HAMMER
DS8	CARBONATOR	RTS	RTS	AF	CI		–	–	–	–	–	

BACK OF HOUSE EQUIPMENT PLUMBING SCHEDULE

ITEM NO.	DESCRIPTION	MANUFACTURER	MODEL NUMBER	FURNISHED BY:	INSTALLED BY:	PLUMBING CW	PLUMBING HW	PLUMBING DRAIN	PLUMBING VENT	PLUMBING GAS	PLUMBING BTU'S	REMARKS
BH02	BAG-N-BOX	RTS	RTS	AF	AI							
BH03	BULK CO2 TANK	RTS	RTS	AF	AI							
BH10	(3) COMPARTMENT SINK WITH FAUCET	RTS	RTS	AF	AI	½"	½"	2"	1-1/2"	–	–	CONN. TO GI-1
BH14A	HAND SINK WITH FAUCET	RTS	RTS	AF	AI	½"	½"	2"	1-1/2"	–	–	PROVIDE MV-1 MIXING VALVE
BH61	(1) COMPARTMENT SINK WITH FAUCET	RTS	RTS	AF	AI	½"	½"	2"	1-1/2"	–	–	INDIRECT CONN. TO FS

(XXX) -(RTS) REFER TO ARCHITECTURAL DRAWINGS AND EQUIPMENT SCHEDULE (DRAWING EQ1.2) FOR EQUIPMENT ADDITIONAL INFORMATION.

NOTES:
CONTRACTOR TO VERIFY ALL UTILITY REQUIREMENTS FOR EQUIPMENT, INSTALL ROUGH-INS, & MAKE FINAL CONNECTIONS.
ALL EQUIPMENT CONNECTION SHALL BE PER MANUFACTURERS RECOMMENDATIONS, SHUT-OFF VALVE SHALL BE PROVIDED AT EACH CONNECTION.
CONTRACTOR TO PROVIDE ALL HARDWARE AND APPURTENANCES FOR COMPLETE INSTALLATION FOR APPLICABLE CODE, OWNER GUIDELINES, AND MANUFACTURERS RECOMMENDATION.
17 GA "P" TRAP WITH CLEANOUT, 17 GA CONTINUOUS WASTE FITTINGS, METAL SUPPLIES WITH STOPS.
ITEMS FURNISHED / INSTALLED AS FOLLOWS:
AF – AAFES FURNISHED
AI – AAFES INSTALLED
CF – CONTRACTOR FURNISHED
CI – CONTRACTOR INSTALLED

RTS - REFER TO SHEET EQ1.2 EQUIPMENT SCHEDULES FOR ADDITIONAL INFORMATION.

PLUMBING FIXTURE SCHEDULE

MARK	DESCRIPTION	PIPING CONNECTIONS HW	CW	VENT	TRAP	WASTE	MOUNTING HEIGHT
WC-1	AM. STD. "AFWALL" #3351.160 (1.6 GPF) WATER CLOSET, WHITE, VITREOUS CHINA, ELONGATED BOWL, WALL MOUNTED, TOP SPUD FOR SLOAN "ROYAL" #111 FLUSHOMETER OLSONITE #95 WHITE OPEN FRONT SEAT LESS COVER ZURN HEAVY DUTY CARRIER.	-	1-1/4"	2"	INT.	4"	17" TO RIM ADA
WC-2	SAME DESCRIPTION AS WC-1 EXCEPT 15" MOUNTING HEIGHT	-	1-1/4"	2"	INT.	4"	15" TO RIM
UR-1	AM. STD. "TRIMBROOK" #6561.017(1.0 GPF) URINAL, WHITE, VITREOUS CHINA, LOW CONSUMPTION, SIPHON JET FLUSH ACTION, WALL MOUNTED, ¾" TOP SPUD FOR SLOAN "ROYAL" #186-1 FLUSHOMETER ZURN HEAVY DUTY CARRIER.	-	1"	1-1/2"	INT.	2"	17" TO RIM ADA
UR-2	SAME DESCRIPTION AS UR-1 EXCEPT 24" MOUNTING HEIGHT	-	1"	1-1/2"	INT.	2"	24" TO RIM
LAV-1	AM. STD. "LUCERNE" #0355.012 LAVATORY, WHITE, VITREOUS CHINA, WALL HUNG, 4" FAUCET CENTERS FOR MOEN #8413 SINGLE HANDLE FAUCET, GRID DRAIN, TAILPIECE, ADJ. "P" TRAP, SUPPLIES WITH STOPS J.R. SMITH #700 CARRIER WATTS SERIES MMV-M1 MIXING VALVE, BRASS, UNION CONNECTIONS, SET TEMP 105°F.	1/2"	1/2"	1-1/2"	1-1/4"	2"	31" TO RIM
LAV-2	COUNTER TOP WITH INTEGRAL LAVATORY, REFER TO ARCH. DRAWINGS MOEN #8413 SINGLE HANDLE FAUCET, GRID DRAIN, TAILPIECE, ADJ. "P" TRAP, SUPPLIES WITH STOPS J.R. SMITH #700 CARRIER WATTS SERIES MMV-M1 MIXING VALVE, BARS, UNION CONNECTIONS, SET TEMP 105°F. TRUEBRO WHITE #102 TRAP WRAP WITH ACCESSORIES OR BROCAR AS EQUAL.	1/2"	1/2"	1-1/2"	1-1/4"	2"	COUNTERTOP ADA
LAV-3	COUNTER TOP WITH INTEGRAL LAVATORY, REFER TO ARCH. DRAWINGS MOEN #8413 SINGLE HANDLE FAUCET, GRID DRAIN, TAILPIECE, ADJ. "P" TRAP, SUPPLIES WITH STOPS J.R. SMITH #700 CARRIER WATTS SERIES MMV-M1 MIXING VALVE, BRASS, UNION CONNECTIONS, SET TEMP 105°F.	1/2"	1/2"	1-1/2"	1-1/4"	2"	COUNTERTOP
EWC-1	ELKAY #EZSTLBC ELECTRIC WATER COOLER, BARRIER-FREE, WALL MOUNTED, TWO-LEVEL, 115/60/1, 4.0 AMPS. DIELECTRIC COUPLING, PVC "P" TRAP J.R. SMITH CARRIER. CABINET FINISH BY ARCHITECT	–	1/2"	1-1/2"	1-1/4"	2"	36" TO RIM ADA
MB-1	FIAT #MSB-2424 MOP SERVICE BASIN, 24"x24"x10"(H) SIZE, WHITE, RUGGED MOLDED STONE. #889-CC HANGER, #832-AA 30" HOSE, #E-77-AA GUARD, #MSG 24x24 S.S. WALLGUARD, DRAIN, FIAT #830-AA SERVICE-SINK FAUCET, VACUUM BREAKER, INTEGRAL STOPS, ADJ. WALL BRACE, PAIL HOOK, 3/4" HOSE THREAD ON SPOUT. CHROME PLATED.	1/2"	1/2"	1-1/2"	3"	3"	FAUCET 30" AFF
MV-1	WATTS SERIES MMV-M1 MIXING VALVE, BRASS, UNION CONNECTIONS, 80°F-120°F RANGE, SET. TEMP. AT 105°F, ASME 1070 LISTED.	1/2"	1/2"	-	-	-	–
BFP-1	WATTS #7C DUAL CHECK VALVES BACKFLOW PREVENTER, CHROME PLATED BRASS BODY.	-	1/2"	-	-	-	–
TPV	PRIME-RITE #P2-500, TRAP PRIMING VALVE WITH INTEGRAL BACKFLOW PREVENTER. MAXIMUM 2 DRAIN CAPACITY.	-	1/2"	-	-	-	ABOVE LAY-IN CEILING
KS-1	ELKAY "LUSTERTONE" #LR2219, SINGLE BOWL, COUNTERTOP SINK, 18 GA, #LK35 CUP STRAINER WITH TAILPIECE, 3 HOLE PUNCHING ON 8" CENTER FOR MOEN #8710 "SANI-STREAM" SINGLE HANDLE FAUCET, SWING "N" SPRAY AERATOR, METAL SUPPLIES WITH STOPS. 17 GA BRASS, ADJ. "P" TRAP. CHROME FINISHES.	1/2"	1/2"	1-1/2"	1-1/2"	2"	COUNTERTOP
KS-2	ELKAY "LUSTERTONE" #LR3319, DOUBLE BOWL, COUNTERTOP SINK, 18 GA, #LK35 CUP STRAINER WITH TAILPIECE, 3 HOLE PUNCHING ON 8" CENTER FOR MOEN #8710 "SANI-STREAM" SINGLE HANDLE FAUCET, SWING "N" SPRAY AERATOR, METAL SUPPLIES WITH STOPS. 17 GA BRASS, ADJ. "P" TRAP. CHROME FINISHES.	1/2"	1/2"	1-1/2"	1-1/2"	2"	COUNTERTOP
LS-1 (OPTICAL CENTER)	ELKAY "LUSTERTONE" #LR2219, SINGLE BOWL, COUNTERTOP SINK, #LK35 CUP STRAINER WITH TAILPIECE, 3 HOLE PUNCHING ON 8" CENTER FOR MOEN #8710 "SANI-STREAM" SINGLE HANDLE FAUCET, SWING "N" SPRAY AERATOR, METAL SUPPLIES WITH STOPS. 17 GA BRASS, ADJ. "P" TRAP. CHROME FINISHES.	1/2"	1/2"	1-1/2"	1-1/2"	2"	COUNTERTOP

DRAIN SCHEDULE

SYMBOL	DESCRIPTION	PIPING CONNECTION HW	CW	VENT	TRAP	WASTE	REMARKS
GI-1	ZURN Z-1170 SIZE 800 IN-GROUND GREASE INTERCEPTOR 50 GPM, 100LB CAPACITY, 36"x24"x21-1/2"(H) SIZE EXTENSION FOR RECESSED INSTALLATION, RECEIVER FOR RECESSED INSTALLATION FLOW CONTROL FITTING (FIELD VERIFY SANITARY INVERT FOR CONNECTION).	–	–	–	3"	3"	FLUSH WITH FINISHED FLOOR
FS-1	ZURN #ZN1901-K-1 SANI-FLOR RECEPTOR, 12"x12"x8"(D), CAST IRON BODY WITH WHITE ACID RESSITING PORCELAIN ENAMEL INTERIOR AND TOP, BOTTOM DOM STRAINER ANCHOR FLANGE, LESS GRATE	–	–	–	4"	4"	FLUSH WITH FINISHED FLOOR
FD-1	ZURN #ZN-415-Y-P-71 3"ø FLOOR DRAIN TYPE "7" NICKEL BRONZE TOP, CAST IRON, SEDIMENT BUCKET, FLASHING COLLAR, NICKEL BRONZE TOP, TRAP PRIMER CONNECTION FITTING	–	1/2"	–	4"	4"	FLUSH WITH FINISHED FLOOR (RAISED LIP)
HT-1	ZURN #Z-1176 DURA-COATED CAST IRON HAIR AND SOLIDS INTERCEPTOR, 1-1/2" SLIP JOINT ELBOW INLET AND 1-1/2" THREADED SWIVEL ELBOW TOP OUTLET, PERFORATED STAINLESS STEEL BASKET REMOVABLE FROM BOTTOM WITH FLANGED AND GASKETED SLOTTED CLEANOUT COVER.	–	–	–	1-1/2"	2"	IN LIEU OF "P" TRAP
WCO	ZURN #Z-1445-BR WALL CLEANOUT, WITH ACCESS STAINLESS STEEL COVER, BRONZE PLUG	–	–	–	–	4"	FLUSH WITH FINISHED WALL
FCO	ZURN #ZN-1400-KC-SC FLOOR CLEANOUT, FLASHING PAN WITH CLAMPING COLLAR WITH NICKEL BRONZE SCORIATED TOP	–	–	–	–	4"	FLUSH WITH FINISHED FLOOR

NOTE: CONTRACTOR IS REQUIRED TO PROVIDE ALL EQUIPMENT SHOWN IN THE PLUMBING SCHEDULES, PLUMBING PLANS, AND DETAILS.

WATER HEATER SCHEDULE (DUNKIN DONUTS)

SYMBOL	DESCRIPTION	PIPING CONNECTION HW	CW	REMARKS
EWH-1	HUBBELL SC030-0-20SLT4 ELECTRIC WATER HEATER 20 KW, 480/60/3, 22 AMPS 82 GPH @ 100°F RISE, 20"ø x41.5"(H) SIZE, WALL MOUNTING SHELF,	3/4"	3/4"	WALL SHELF MT'D
ET-1	HUBBELL DXT-8 EXPANSION TANK 2.1 GAL. CAP.	–	–	SUPPORT TANK FROM WALL OR OVERHEAD WITH UNISTRUT AND/OR HANGER RODS

NOTE: COORDINATE WATER HEATER INSTALLATION WITH VENDOR.

WATER FILTRATION SYSTEM (DUNKIN DONUTS)

SYMBOL	DESCRIPTION	PIPING CONNECTION CW	FILTERED WATER	REMARKS
WF-1	AQUA-PURE MODEL DP290 DUAL-PORT WATER FILTRATION SYSTEM. 10 GPM FOR SIMULTANEOUS OPERATION OF CARBONATORS, COFFEE MACHINE, AND ICE MACHINE	3/4"	3/4"	WALL MT'D

NOTE: COORDINATE WATER FILTRATION SYSTEM WITH VENDOR.

GENERAL PLUMBING NOTES:

1. THE PLUMBING SYSTEM INSTALLATION SHALL BE IN ACCORDANCE WITH NFPA AND PLUMBING CODE AND ALL LOCAL CODES AND ORDINANCES.
2. DRAWINGS ARE DIAGRAMMATIC. INDICATED POSITIONS SHALL BE FOLLOWED AS CLOSELY AS POSSIBLE. EXACT EQUIPMENT LOCATIONS AND PIPING ROUTING SHALL BE SUBJECT TO BUILDING CONSTRUCTION AND INTERFERENCES WITH OTHER TRADES.
3. ALTHOUGH ATTEMPTS HAVE BEEN MADE TO IDENTIFY EXISTING EQUIPMENT LOCATIONS, PIPE ROUTING AND SIZES WITH THE USE OF EXISTING DRAWINGS AND FIELD OBSERVATIONS, PC SHALL FIELD VERIFY ALL EXISTING INFORMATION. REPORT ANY DISCREPANCIES TO THE ARCHITECT OR ENGINEER. NOTE ALL DISCREPANCIES ON THE AS-BUILT DRAWINGS.
4. COORDINATE ALL WORK WITH THE PHASING OF THE PROJECT. SOME SERVICES MUST REMAIN ACTIVE TO SERVE OCCUPIED SPACES DURING CONSTRUCTION. SCHEDULE ALL SERVICE SHUTDOWNS WITH OWNER AND/OR CONSTRUCTION MANAGER.
5. UNLESS NOTED OTHERWISE ALL SERVICES INDICATED AS BEING REMOVED SHALL BE REMOVED BACK TO THE MAIN AND CAPPED. IDENTIFY ALL CAPPED SERVICES. DEAD-END PIPING IS NOT PERMITTED. REMOVE ALL PREVIOUSLY ABANDONED PIPING, SUPPORT, ETC ENCOUNTERED ABOVE CEILINGS.
6. THE OWNER SHALL HAVE THE OPTION OF RETAINING ANY OR ALL REMOVED FIXTURES OR EQUIPMENT FOR SALVAGE. ALL REMOVED EQUIPMENT AND FIXTURES THAT ARE NOT RETAINED BY THE OWNER, SHALL BE DISPOSED OF BY THE PC
7. ALL CUTTING AND PATCHING, OF WALLS AND FLOORS, SHALL BE PERFORMED BY THE CONTRACTOR PERFORMING THE WORK REQUIRING THE PENETRATION. ALL PATCHING MATERIALS SHALL MATCH THE EXISTING OR NEW CONDITIONS. ALL FINISH PAINTING TO BE BY THE GENERAL CONTRACTOR.
8. ALL FIRE-STOPPING SHALL BE PERFORMED BY THE CONTRACTOR PERFORMING THE WORK REQUIRING THE PENETRATION. REFER TO THE DETAILS PERTAINING TO TYPE AND METHOD REQUIRED.
9. REFER TO EQUIPMENT DRAWINGS FOR ALL AAFES FURNISHED EQUIPMENT LOCATIONS AND CONNECTION REQUIREMENTS. PROVIDE ALL PIPING CONNECTIONS AS REQUIRED. ALL ROUGH-INS TO BE FIELD COORDINATED WITH ACTUAL EQUIPMENT PURCHASED AND INSTALLED.
10. REFER TO ARCHITECTURAL INTERIOR ELEVATIONS FOR EXACT LOCATIONS AND MOUNTING HEIGHTS OF PLUMBING FIXTURES.
11. ALL SEWER PIPING SHALL BE SLOPED 1% MINIMUM UNLESS NOTED OTHERWISE. ALL SANITARY SHALL BE SLOPED PER THE OHIO PLUMBING CODE.
12. ALL INVERT ELEVATIONS NOTED ARE FROM TOP OF SLAB. MINIMUM STARTING SANITARY INVERT FOR ANY LATERAL BRANCH DRAIN SHALL BE -(1'-6') BELOW TOP OF SLAB.
13. THE MINIMUM UNDER FLOOR SANITARY SEWER PIPE SIZE SHALL BE 2'.
14. ALL FLOOR DRAINS SHALL HAVE TRAP PRIMERS EXCEPT FOR THOSE INDIRECTLY FED FROM ANOTHER FLOOR DRAIN WITH A TRAP PRIMER OR THOSE RECEIVING A CONTINUOUS WATER SOURCE SUCH AS INDIRECT WASTE FROM COIL CONDENSATE DRAIN WATER.
15. ALL INDIRECT DRAINS AND PUMPED DISCHARGE TERMINATIONS SHALL HAVE 45 DEGREE CHAMFER CUT AT OUTLET.
16. INSTALL TRAP PRIMER VALVES ABOVE CEILING. ALL VALVES SHALL BE ACCESSIBLE.
17. BULLHEAD CONNECTIONS IN PIPING ARE PROHIBITED.
18. FIELD VERIFY EXISTING SANITARY AND WATER PIPING TO BE REUSED AS FEASIBLE.
19. PROVIDE CLEAN-OUTS AT BASES OF AND AT HORIZONTAL OFFSETS OF ALL SANITARY STACKS.
20. SANITARY AND VENT PIPING INDICATED IS ABOVE CEILING. REFER TO INDIVIDUAL STACK DIAGRAMS FOR WASTE AND VENT PIPING RUN WITHIN WALLS/CHASES AND ANY PIPE SIZING NOT INDICATED ON PLANS FOR DRAWING CLARITY. REFER TO THE PLUMBING FIXTURE CONNECTION SCHEDULE FOR FIXTURE WASTE AND VENT PIPE SIZING.
21. ALL EXISTING STORM AND OVERFLOW SYSTEM TO REMAIN.
22. ALL NEW PIPING SHALL BE PURGED AND DISINFECTED PER THE PLUMBING CODE PRIOR TO TIE-IN TO EXISTING POTABLE WATER SYSTEM. THE PC SHALL INSTALL ALL VALVES AND FITTINGS AS REQUIRED TO ACCOMPLISH THE PROCESS. A TEST REPORT OF CERTIFICATION SHALL BE SUBMITTED FOR REVIEW AND INCLUDED IN THE OPERATING AND MAINTENANCE MANUAL.
23. ALL VALVES MUST BE ACCESSIBLE. IF LOCATED ABOVE DRYWALL CEILING OR BEHIND FINISHED WALLS, PROVIDE ACCESS DOOR. COORDINATE ALL ACCESS DOOR LOCATIONS WITH ARCHITECT.
24. INSTALL BRANCH WATER PIPING HORIZONTALLY WITHIN WALL FOR FIXTURE GROUPINGS. REFER TO FIXTURE CONNECTION SCHEDULE FOR SIZING REQUIREMENTS.
25. UNLESS NOTED OTHERWISE ALL VERTICAL PIPING DROPS TO FIXTURES, FAUCETS, ETC. MUST BE CONCEALED IN THE WALL.
26. INSTALLATION OF WATER PIPING IN EXTERIOR BUILDING WALLS SHOULD BE AVOIDED. IF NECESSARY, INSTALL PIPING ON BUILDING SIDE OF WALL INSULATION. INSULATED PIPING PER THE SPECIFICATIONS. COORDINATE ANY/ALL INSTALLATIONS WITH ARCHITECT/ENGINEER.
27. ALL HW TO PUBLIC TOILET ROOM LAVATORIES SHALL BE TEMPERED TO 110°F MAX VIA LOCAL MIXING VALVE INSTALLED ABOVE THE CEILING.
28. DO NOT SUPPORT PIPING FROM ANOTHER PIPE, DUCTWORK OR CONDUIT. DO NOT SUPPORT ANY ITEM FROM METAL ROOF DECK.
29. NO EXPOSED PIPING SHALL BE INSTALLED BELOW CEILING.
30. ATTENTION IS CALLED TO ROUGH-IN REQUIREMENTS FOR FIXTURES INSTALLED IN CASEWORK FURNISHED BY ANOTHER DIVISION. THE PC SHALL PROVIDE ROUGH-INS OUT OF WALL WITH ENOUGH LENGTH TO ALLOW FOR SUPPLY STOPS AND WASTES TO HAVE ESCUTCHEONS AT THE REAR BACKING OF THE CASEWORK AND NOT AT THE WALL ACCESSIBLE THROUGH FIELD CUT HOLES IN THE CASEWORK BACKING.
31. WATER SUPPLY TO ALL ELECTRIC COFFEE MAKERS AND ICE MACHINES SHALL BE FILTERED WATER. INSTALL FILTERED WATER SYSTEM PER MANUFACTURERS REQUIREMENTS. WALL MOUNTED FILTERS LOCATION SHALL BE ACCESSIBLE. PROVIDE FILTERED WATER PIPING WITHIN WALL TO EQUIPMENT WITH A SUPPLY STOP, BACKFLOW PREVENTER AND FLEXIBLE CONNECTION. PROVIDE ESCUTCHEONS FOR WALLS AND/OR CASEWORK AND GROMMETS FOR COUNTER SURFACES.
32. WHERE A FLOOR DRAIN/SINK IS INSTALLED ADJACENT TO EQUIPMENT FOR DRAINING PURPOSES, THE EXACT LOCATION OF THE DRAIN/SINK MUST BE COORDINATED IN THE FIELD WITH THE INSTALLED PIECE OF EQUIPMENT. EXACT ELEVATIONS OF FLOOR DRAINS/SINKS MUST BE COORDINATED IN THE FIELD WITH FINISHED FLOOR LEVELS AND SLOPES.

DATES AND REVISIONS

No.	Date/Description
	04.11.12 – BID

EXCHANGE™

RICHARD L. BOWEN + ASSOCIATES INC.
ARCHITECTS • ENGINEERS • CONSTRUCTION MANAGERS
13000 Shaker Boulevard / Cleveland, Ohio 44120
Phone: (216) 491-9300 Fax: (216) 491-9053
www.rlba.com - email@rlba.com

FT. MYER EXCHANGE
JBMHH - MYER
ARLINGTON, VIRGINIA

PLUMBING SCHEDULES, LEGEND, & NOTES

DRAWN BY: KAF
CHECKED BY: KAF
RLB NO.: 7800.02

DRAWING NO.
P0.0

P:\7800\7800.02 FT. MYER PX IMAGE UPGRADE CONST. CONTRACT DOCS\MEDIA\7800002_P00-00.DWG | PLOTTED 04.09.2012 09:21AM BY MARWAL ALEXSEYEV

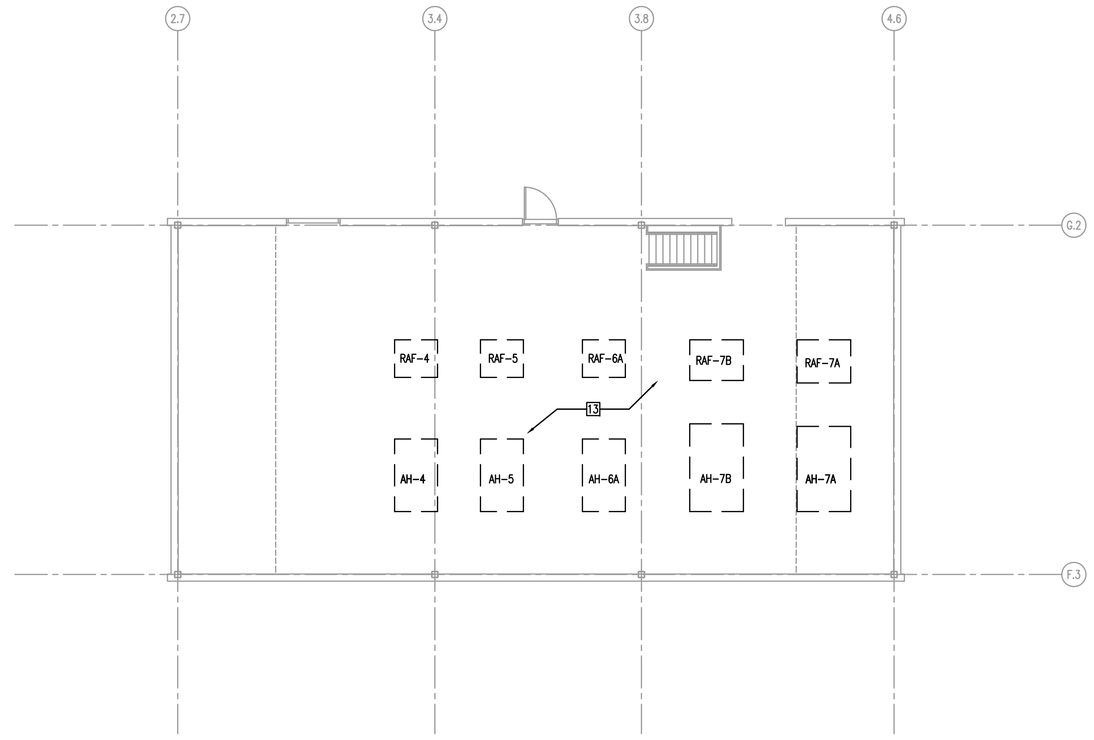

2 P1.1 MECHANICAL PENTHOUSE PLUMBING PLAN
SCALE: 1/8" = 1'-0"

0 1' 2' 4' 8'

TRUE NORTH

PLUMBING CODED NOTES

1. ½" CW & HW DROP IN WALL CONN. TO SINK.
2. EXTEND CW & HW TO CONN. TO NEAREST EXISTING PIPING.
3. EXISTING FCO TO REMAIN.
4. INSTALL NEW 1.6 GPF WC AT LOCATION OF REMOVED FIXTURE. RECONNECT TO EXISTING SANITARY/VENT AND WATER SUPPLY.
5. INSTALL NEW 0.125 GPF UR AT LOCATION OF REMOVED FIXTURE. RECONNECT TO EXISTING SANITARY/VENT AND WATER SUPPLY.
6. INSTALL NEW LAV AND 0.5 GPM FAUCET AERATOR AT LOCATION OF REMOVED FIXTURE. RECONNECT TO EXISTING SANITARY/VENT AND WATER SUPPLIES. PROVIDE POWER SERIES LFe480 TEMPERING VALVE (ASSE1070).
7. EXISTING MOP BASIN TO REMAIN.
8. EXTEND 4" SAN & 2" VENT TO CONN. TO NEAREST EXISTING PIPING.
9. INSTALL NEW EWC-1 AT LOCATION OF REMOVED FIXTURE. RECONNECT TO EXISTING SANITARY/VENT AND WATER SUPPLY. PROVIDE NEW CARRIER.
10. INSTALL SERVICE PIPING TO BEVERAGE DISPENSING EQUIPMENT.
11. PROVIDE ROUGH-IN FOR BARBER SINK WITH FAUCET PER MF'R REQUIREMENTS. COORDINATE FINAL CONNECTIONS WITH AI.
    EXTEND DRAIN TO CONNECT TO EXISTING SANITARY. CUT FLOOR AS REQUIRED. PATCH FLOOR TO MATCH EXISTING. EXTEND VENT TO CONNECT TO EXISTING VENT SYSTEM. EXTEND HOT WATER AND COLD WATER FROM EXISTING MAINS. FIELD VERIFY EXACT PIPING LOCATION.
    PROVIDE MV-1 MIXING VALVE AT EACH SINK.
    PROVIDE HT-1 HAIR AT EACH SINK.
12. EXISTING FLOOR DRAIN TO REMAIN.
13. NO WORK IN THIS AREA.
14. PROVIDE ROUGH-IN FOR ICE MACHINE, BEVERAGE DISPENSERS, COFFEE, AND ICE TEA BREWER PER MF'R REQUIREMENTS. COORDINATE FINAL CONNECTIONS WITH VENDOR.
    PROVIDE IN-LINE WATER FILTER.
    PROVIDE SHUT-OFF VALVE AND BFP-1 BACKFLOW PREVENTER AT EACH CONN.
15. PROVIDE SODA/BEVERAGE LINE IN METAL CONDUIT FROM ITEM BH02 BAG-N-BOX SODA SYSTEM TO ITEM DS4 BEVERAGE DISPENSER.
16. EXTEND 1/2" FCW TO CONNECT TO EACH EQUIPMENT PER MF'R REQUIREMENTS WITH SHUT-OFF VALVE AND BFP-1.
17. INSTALL 1/2" FCW TYPE "K" SOFT COPPER PIPING UNDER FLOOR (MIN.15" BFT). PROVIDE INSULATION AND COLOR CODED POLYETHENE SLEEVE BY IPS OR APPROVED EQUIVALENT. COORDINATE PIPING LOCATION IN THE FIELD.

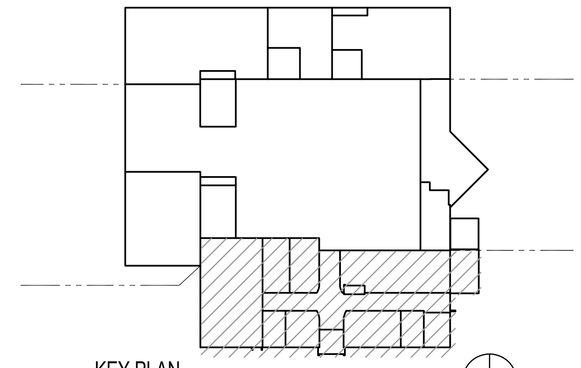

KEY PLAN
SCALE: N.T.S.

TRUE NORTH

FIRE PROTECTION NOTES

REWORK EXISTING WET PIPE SPRINKLER SYSTEM IN ACCORDANCE WITH NFPA 13 AND BUILDING CODE (FULLY SPRINKLERED BUILDING) TO ACCOMMODATE NEW FLOOR AND CEILING LAYOUT.
ALL NEW MATERIAL SHALL BE LISTED AND MATCH EXISTING.
FIRE PROTECTION CONTRACTOR SHALL DESIGN AND INSTALL SPRINKLER SYSTEM BASED ON CONTRACTOR FURNISHED HYDRAULIC CALCULATIONS, PERFORMED BY A CERTIFIED DESIGNER.
CONTRACTOR SHALL OBTAIN FLOW TEST DATA.
CONTRACTOR SHALL SUBMIT SHOP DRAWINGS AND CALCULATIONS TO THE DPW FOR FINAL APPROVAL BY AUTHORITY HAVING JURSDICTION.
ALL TESTS SHALL BE WITNESSED BY THE FIRE CHIEF OR AHJ.
THE CONTRACTOR SHALL BE STATE FIRE MARSHALL CERTIFIED.

SPRINKLER DESIGN CRITERIA

LIGHT HAZARD:	SEATING AREA, OFFICES, CORRIDORS:
ORDINARY HAZARD GROUP 1:	FOOD SERVICE AREAS, STORAGE, MECHANICAL ROOM, ELECTRICAL ROOM:
ORDINARY HAZARD GROUP 2:	SALES FLOOR

THE FIRE PROTECTION DENSITIES SHALL BE VERIFIED WITH REQUIREMENTS OF INSURANCE CARRIER.

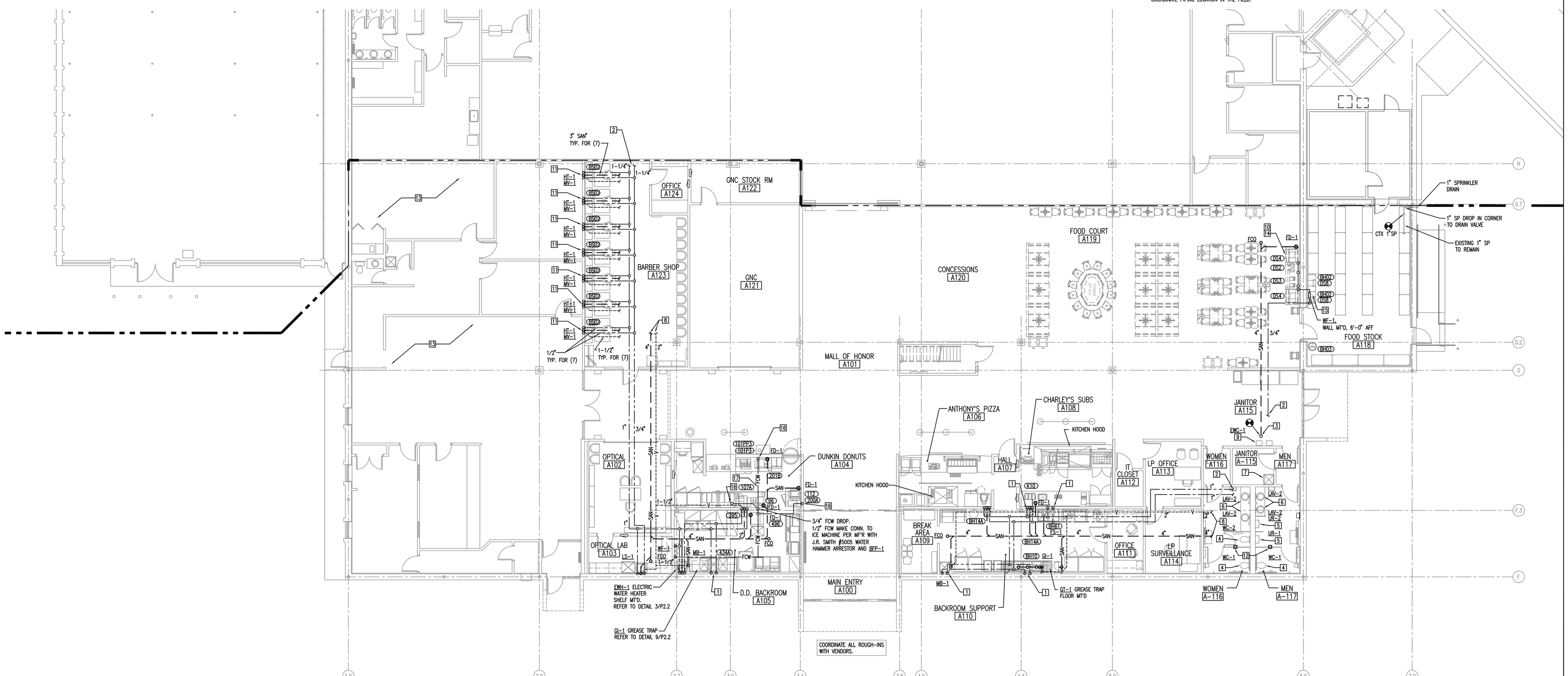

1 P1.1 ENLARGED MALL & FOOD COURT PLUMBING PLAN
SCALE: 1/8" = 1'-0"

0 1' 2' 4' 8'

TRUE NORTH

DATES AND REVISIONS	
No.	Date/Description
	04.11.12 – BID

EXCHANGE™

RICHARD L. BOWEN + ASSOCIATES INC.
ARCHITECTS • ENGINEERS • CONSTRUCTION MANAGERS
13000 Shaker Boulevard / Cleveland, Ohio 44120
Phone: (216) 491-9300 Fax: (216) 491-9053
www.rlba.com - email@rlba.com

FT. MYER EXCHANGE
JBMHH - MYER
ARLINGTON, VIRGINIA

PLUMBING PLAN (1 OF 3)

DRAWN BY: KAF
CHECKED BY: KAF
RLB NO.: 7800.02

DRAWING NO.
P1.1

P:\7800\7800.02 FT. MYER PX IMAGE UPGRADE CONST. CONTRACT DOCS\MECH\780002_P01-01.DWG | PLOTTED 04.09.2012 09:22AM BY MIKHAIL ALEKSEYEV

PLUMBING CODED NOTES

1. CONNECT/INSTALL KS-1 TO EXISTING ROUGH-IN. PROVIDE 1-1/2" "P" TRAP WITH HUB FOR CONDENSATE DRAIN DISCHARGE. REWORK EXISTING SINK DRAIN AND INSTALL "P" TRAP. REFER TO MECH. DRAWINGS FOR CONDENSATE DRAIN PIPING.
2. NO WORK IN THIS AREA.
3. CONNECT NEW FIXTURES TO EXISTING ROUGH-IN.
4. CONNECT TO EXISTING 1-1/4" CW TO EXTEND TO RELOCATED MISTING SYSTEM
5. PROVIDE 4" STORM PIPING FOR CANOPY GUTTER. REFER TO ARCHITECTURAL DRAWINGS FOR INSTALLATION DETAIL AND PAINTING.
6. INSTALL WATER CLOSET LEVEL AND PLUMB. 1/2" CW SUPPLY PIPING. PROVIDE AND INSTALL ALL HARDWARE AND APPURTANANCES FOR A COMPLETE INSTALLATION PER APPLICABLE CODES AND MANUFACTURES'S RECOMMENDATIONS.
7. INSTALL LAVATORY LEVEL AND PLUMB. 1/2" CW & HW SUPPLY PIPING. PROVIDE AND INSTALL ALL HARDWARE AND APPURTANANCES FOR A COMPLETE INSTALLATION PER APPLICABLE CODES AND MANUFACTURER'S RECOMMENDATIONS. INSTALL MIXING VALVE.
8. INSTALL URINAL LEVEL AND PLUMB. 1" CW SUPPLY PIPING. PROVIDE AND INSTALL ALL HARDWARE AND APPURTANANCES FOR A COMPLETE INSTALLATION PER APPLICABLE CODES AND MANUFACTURER'S RECOMMENDATIONS.

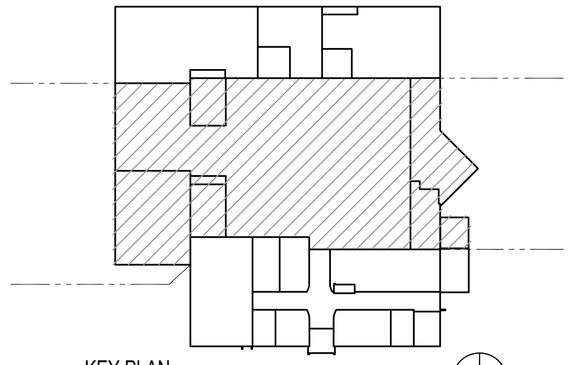

KEY PLAN
SCALE: N.T.S.
TRUE NORTH

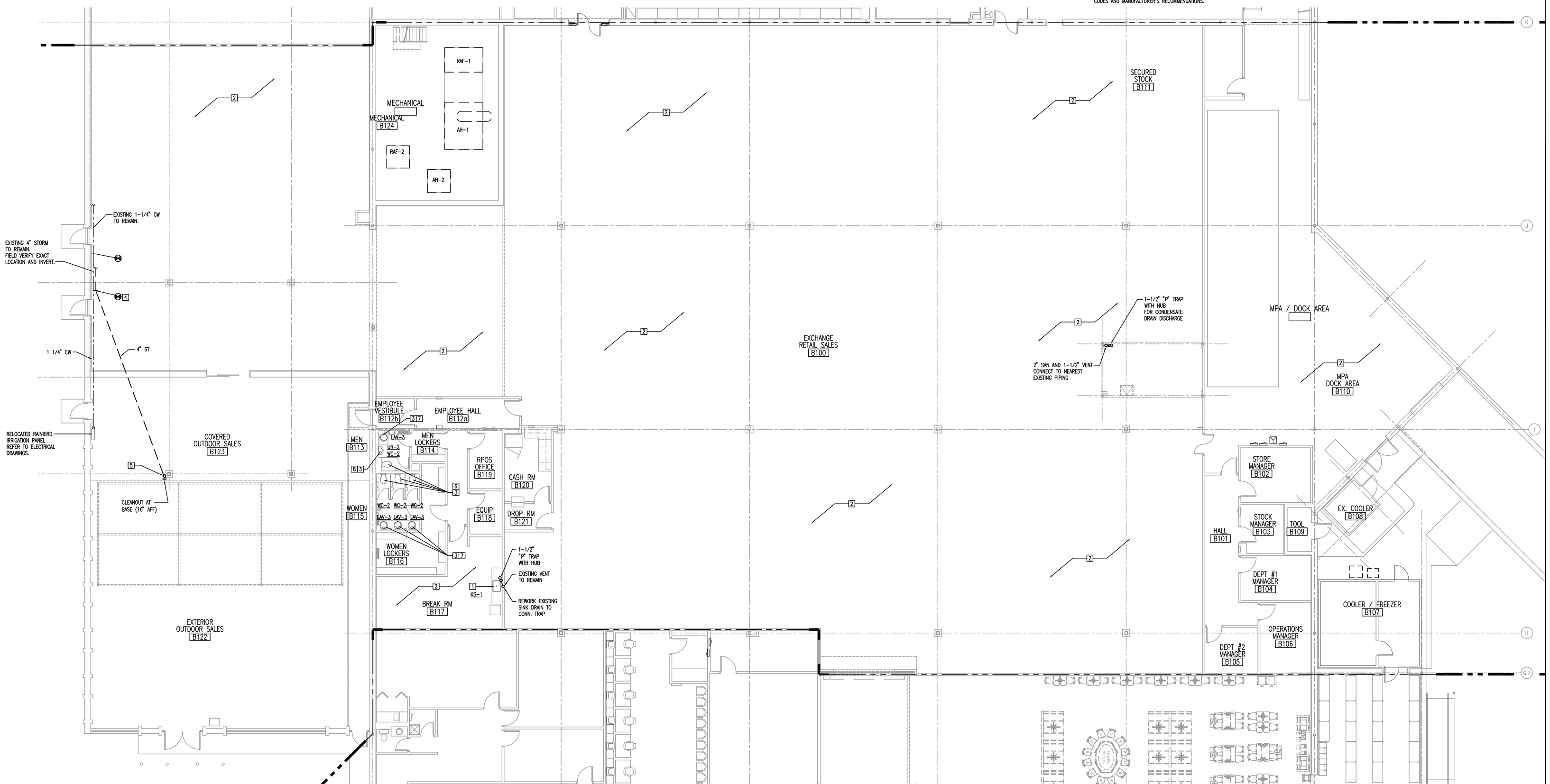

1 / P1.2 ENLARGED RETAIL SALES AREA PLUMBING PLAN
SCALE: 1/8" = 1'-0"

0 1' 2' 4' 8'

TRUE NORTH

DATES AND REVISIONS	
No.	Date/Description
	04.11.12 – BID

EXCHANGE™

RICHARD L. BOWEN + ASSOCIATES INC.
13000 Shaker Boulevard / Cleveland, Ohio 44120
Phone: (216) 491-8300 Fax: (216) 491-8053
www.rlba.com - email@rlba.com

FT. MYER EXCHANGE
JBMHH - MYER
ARLINGTON, VIRGINIA

PLUMBING PLAN (2 OF 3)

DRAWN BY: KAF
CHECKED BY: KAF
RLB NO.: 7800.02

DRAWING NO.
P1.2

P:\7800\7800.02 FT. MYER PX IMAGE UPGRADE CONST. CONTRACT DOCS\MEDIA\7800002_P01-02.DWG | PLOTTED 04.09.2012 09:22AM BY MIKHAIL ALEKSEYEV

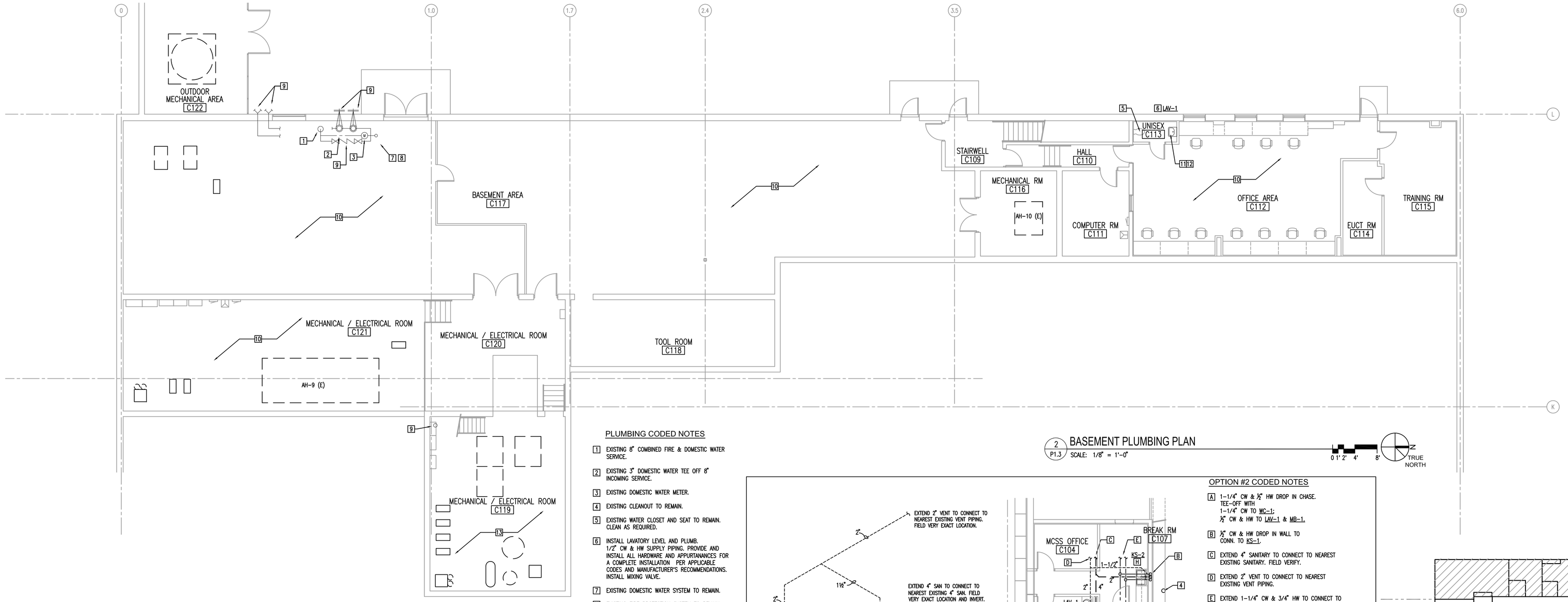

PLUMBING CODED NOTES

1. EXISTING 8" COMBINED FIRE & DOMESTIC WATER SERVICE.
2. EXISTING 3" DOMESTIC WATER TEE OFF 8" INCOMING SERVICE.
3. EXISTING DOMESTIC WATER METER.
4. EXISTING CLEANOUT TO REMAIN.
5. EXISTING WATER CLOSET AND SEAT TO REMAIN. CLEAN AS REQUIRED.
6. INSTALL LAVATORY LEVEL AND PLUMB. 1/2" CW & HW SUPPLY PIPING. PROVIDE AND INSTALL ALL HARDWARE AND APPURTANANCES FOR A COMPLETE INSTALLATION PER APPLICABLE CODES AND MANUFACTURER'S RECOMMENDATIONS. INSTALL MIXING VALVE.
7. EXISTING DOMESTIC WATER SYSTEM TO REMAIN.
8. EXISTING FIRE PROTECTION SYSTEM TO REMAIN.
9. EXISTING FIRE PROTECTION APPURTENANCE.
10. NO WORK IN THIS AREA.
11. CONNECT NEW FIXTURE TO EXISTING ROUGH-IN. PROVIDE NEW CARRIER IF REQUIRED.
12. EXISTING VENT PIPING TO REMAIN.

2 / P1.3 BASEMENT PLUMBING PLAN
SCALE: 1/8" = 1'-0"

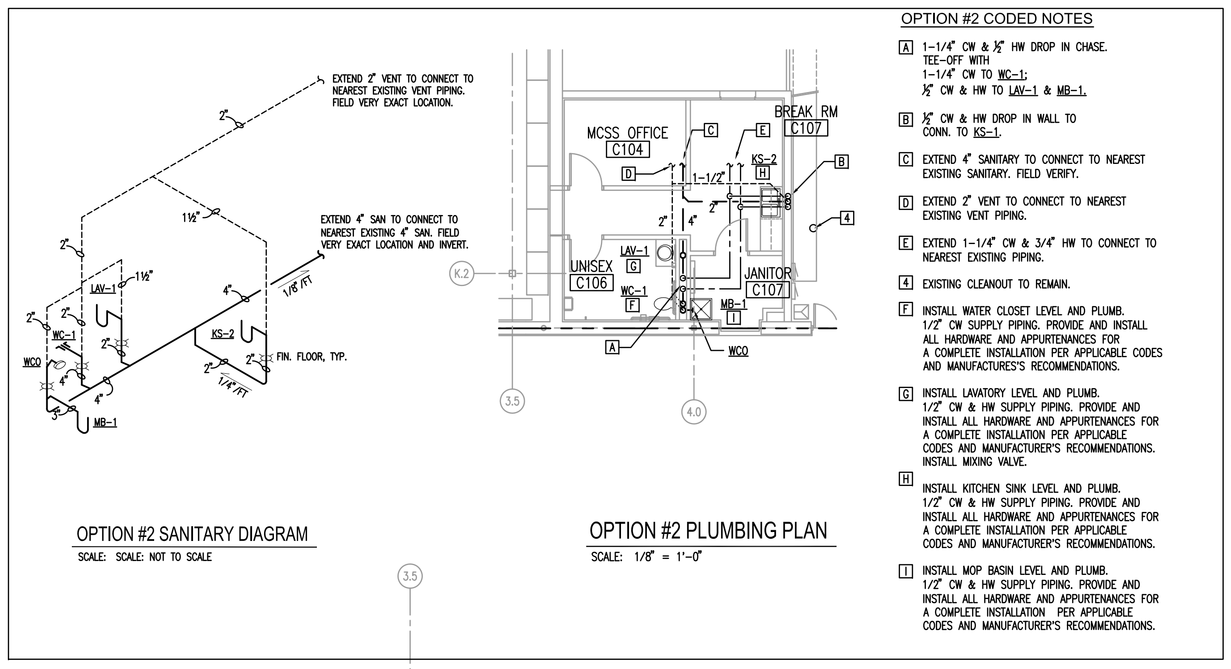

OPTION #2 SANITARY DIAGRAM
SCALE: SCALE: NOT TO SCALE

OPTION #2 PLUMBING PLAN
SCALE: 1/8" = 1'-0"

OPTION #2 CODED NOTES

A. 1-1/4" CW & 1/2" HW DROP IN CHASE. TEE-OFF WITH 1-1/4" CW TO WC-1; 1/2" CW & HW TO LAV-1 & MB-1.

B. 1/2" CW & HW DROP IN WALL TO CONN. TO KS-1.

C. EXTEND 4" SANITARY TO CONNECT TO NEAREST EXISTING SANITARY. FIELD VERIFY.

D. EXTEND 2" VENT TO CONNECT TO NEAREST EXISTING VENT PIPING.

E. EXTEND 1-1/4" CW & 3/4" HW TO CONNECT TO NEAREST EXISTING PIPING.

4. EXISTING CLEANOUT TO REMAIN.

F. INSTALL WATER CLOSET LEVEL AND PLUMB. 1/2" CW SUPPLY PIPING. PROVIDE AND INSTALL ALL HARDWARE AND APPURTENANCES FOR A COMPLETE INSTALLATION PER APPLICABLE CODES AND MANUFACTURES'S RECOMMENDATIONS.

G. INSTALL LAVATORY LEVEL AND PLUMB. 1/2" CW & HW SUPPLY PIPING. PROVIDE AND INSTALL ALL HARDWARE AND APPURTENANCES FOR A COMPLETE INSTALLATION PER APPLICABLE CODES AND MANUFACTURER'S RECOMMENDATIONS. INSTALL MIXING VALVE.

H. INSTALL KITCHEN SINK LEVEL AND PLUMB. 1/2" CW & HW SUPPLY PIPING. PROVIDE AND INSTALL ALL HARDWARE AND APPURTENANCES FOR A COMPLETE INSTALLATION PER APPLICABLE CODES AND MANUFACTURER'S RECOMMENDATIONS.

I. INSTALL MOP BASIN LEVEL AND PLUMB. 1/2" CW & HW SUPPLY PIPING. PROVIDE AND INSTALL ALL HARDWARE AND APPURTENANCES FOR A COMPLETE INSTALLATION PER APPLICABLE CODES AND MANUFACTURER'S RECOMMENDATIONS.

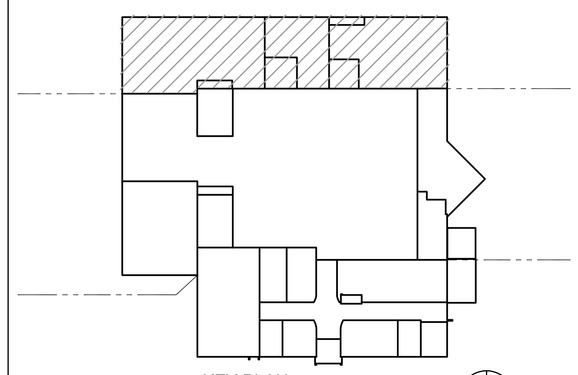

KEY PLAN
SCALE: N.T.S.

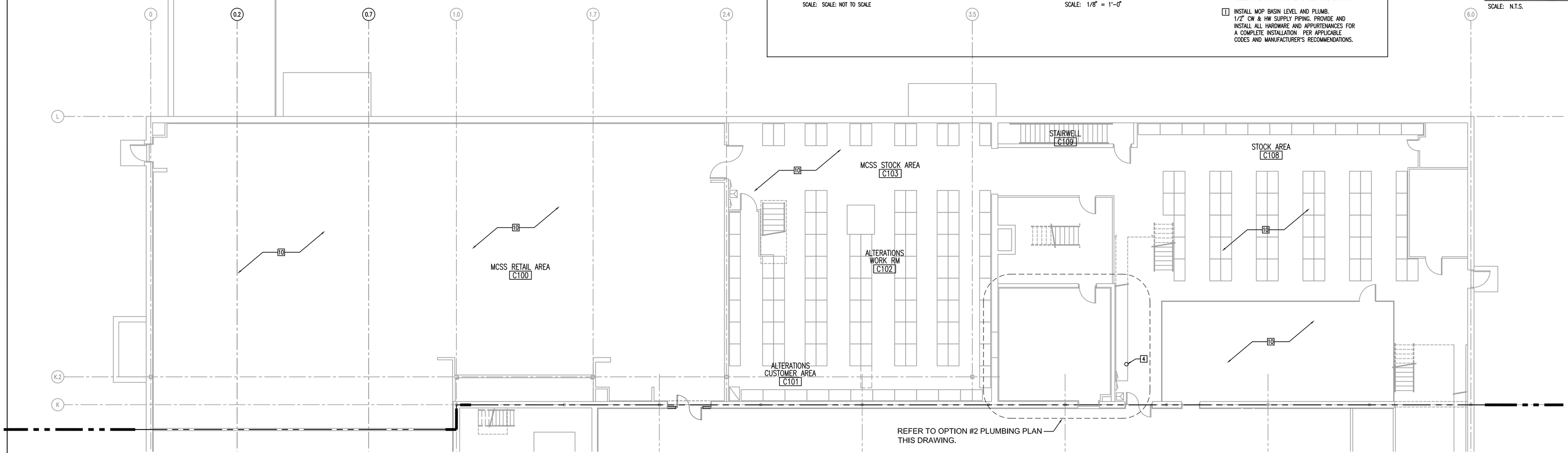

1 / P1.3 ENLARGED MCSS & MPA PLUMBING PLAN
SCALE: 1/8" = 1'-0"

DATES AND REVISIONS	
No.	Date/Description
	04.11.12 - BID

EXCHANGE™

RICHARD L. BOWEN + ASSOCIATES INC.
ARCHITECTS • ENGINEERS • CONSULTANTS
13000 Shaker Boulevard / Cleveland, Ohio 44120
Phone: (216) 491-0300 Fax: (216) 491-8053
www.rlba.com - email@rlba.com

FT. MYER EXCHANGE
JBMHH - MYER
ARLINGTON, VIRGINIA

PLUMBING PLAN (3 OF 3)

DRAWN BY:	KAF
CHECKED BY:	KAF
RLB NO.:	7800.02

DRAWING NO.
P1.3

P:\7800\7800.02 FT. MYER PX IMAGE UPGRADE CONST. CONTRACT DOCS\MECH\780002_P01-03.DWG | PLOTTED 04.09.2012 09:22AM BY MIKHAIL ALEKSEYEV

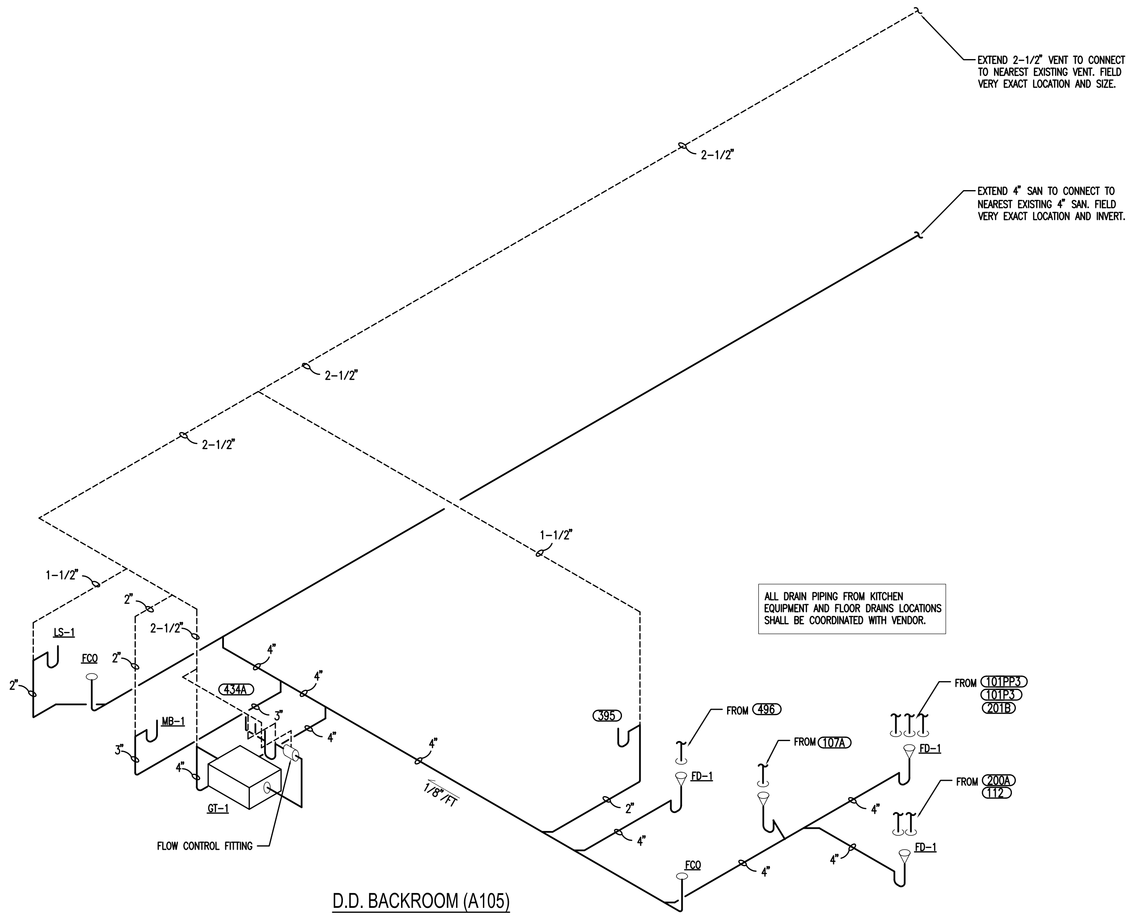

ALL DRAIN PIPING FROM KITCHEN EQUIPMENT AND FLOOR DRAINS LOCATIONS SHALL BE COORDINATED WITH VENDOR.

D.D. BACKROOM (A105)

1 / P2.1 SANITARY DIAGRAM

SCALE: SCALE: NOT TO SCALE

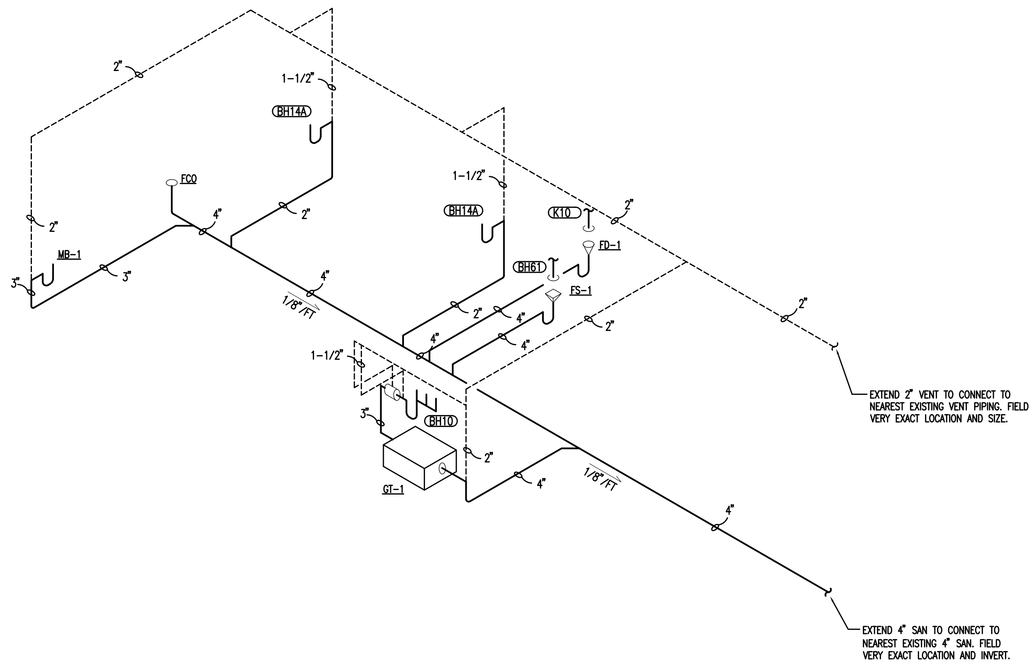

BACKROOM SUPPORT (A116)

2 / P2.1 SANITARY DIAGRAM

SCALE: SCALE: NOT TO SCALE

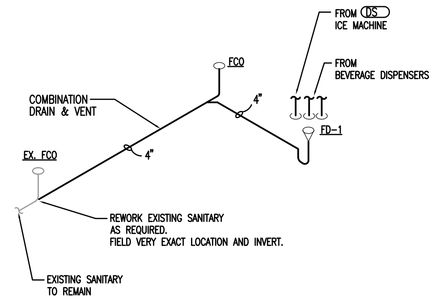

FOOD COURT (A119)

3 / P2.1 SANITARY DIAGRAM

SCALE: SCALE: NOT TO SCALE

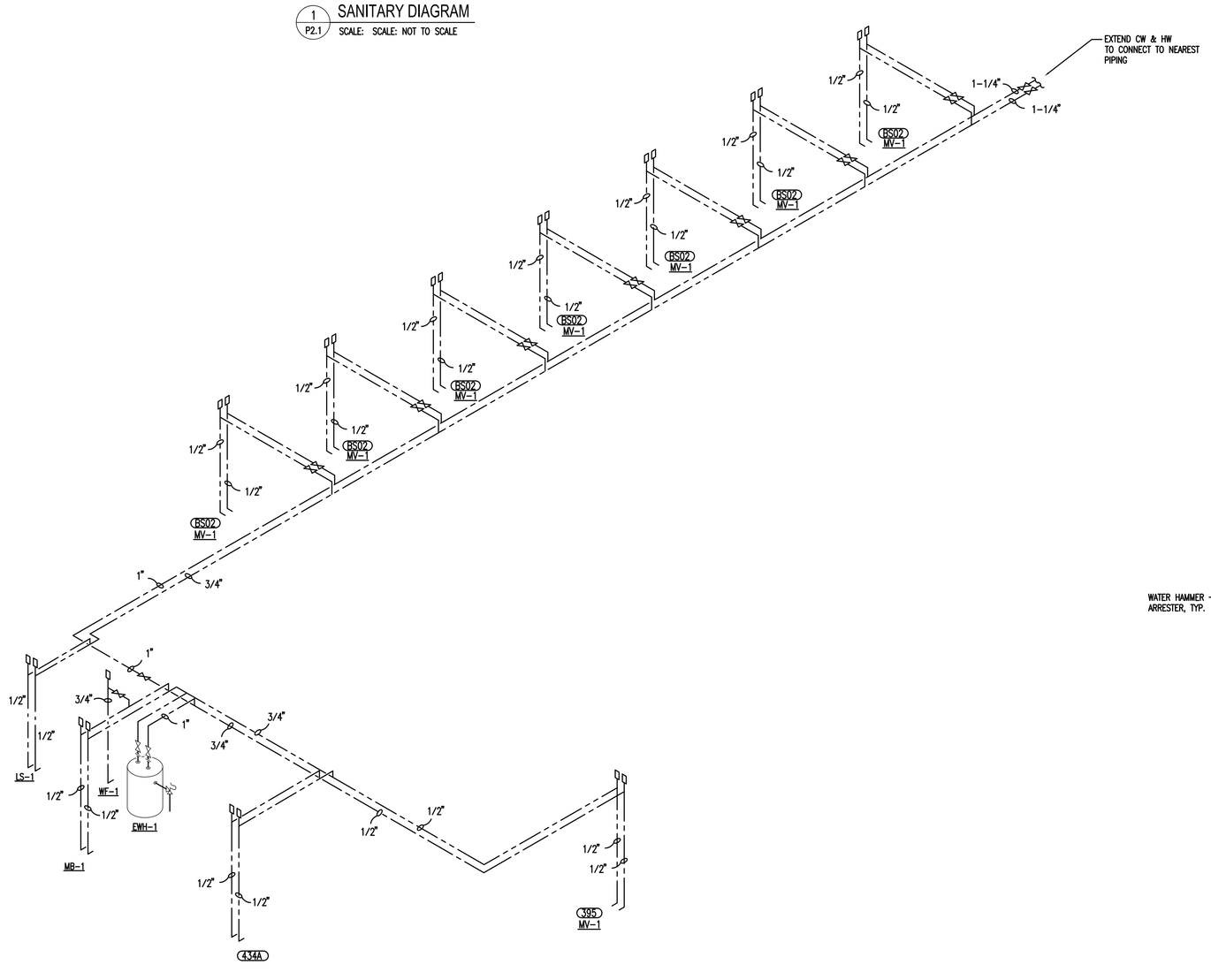

BARBER SHOP (A123) AND D.D. BACKROOM (A105)

4 / P2.1 WATER PIPING DIAGRAM

SCALE: SCALE: NOT TO SCALE

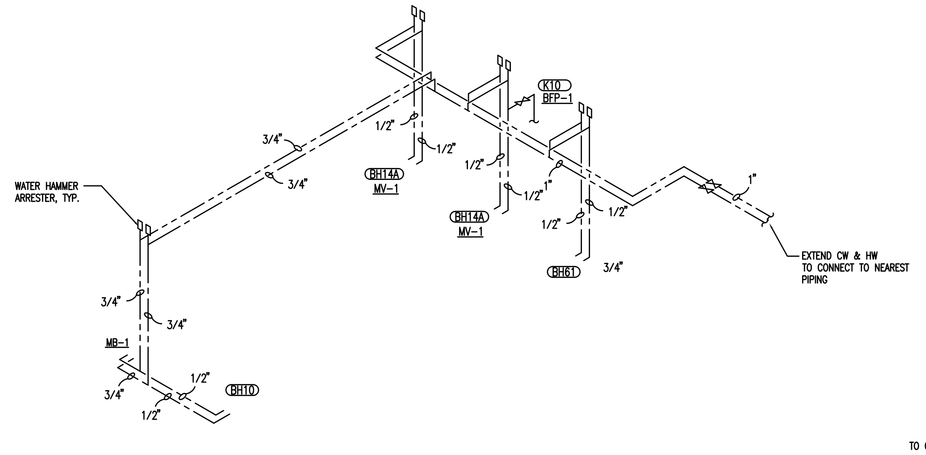

BACKROOM SUPPORT (A116)

5 / P2.1 WATER PIPING DIAGRAM

SCALE: SCALE: NOT TO SCALE

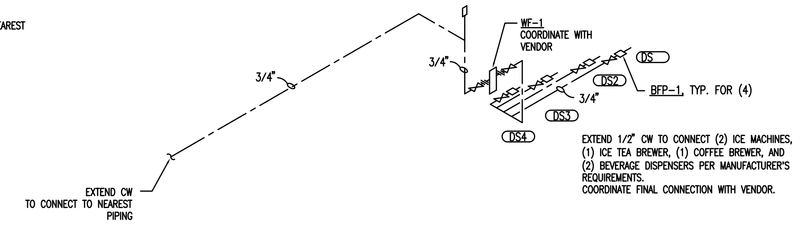

FOOD COURT (A123)

6 / P2.1 WATER PIPING DIAGRAM

SCALE: SCALE: NOT TO SCALE

DATES AND REVISIONS

No.	Date/Description
	04.11.12 – BID

EXCHANGE™

RICHARD L. BOWEN + ASSOCIATES INC.
ARCHITECTS • ENGINEERS • CONSULTANTS
13000 Shaker Boulevard / Cleveland, Ohio 44120
Phone: (216) 491-9300 Fax: (216) 491-8053
www.rlba.com - email@rlba.com

FT. MYER EXCHANGE
JBMHH - MYER
ARLINGTON, VIRGINIA

PLUMBING DETAILS

DRAWN BY: KAF
CHECKED BY: KAF
RLB NO.: 7800.02

DRAWING NO.
P2.1

P:\7800\7800.02 FT. MYER PX IMAGE UPGRADE CONST. CONTRACT DOCS\MECH\7800002_P02-01.DWG | PLOTTED 04.09.2012 09:21AM BY MIKHAIL ALEKSEYEV

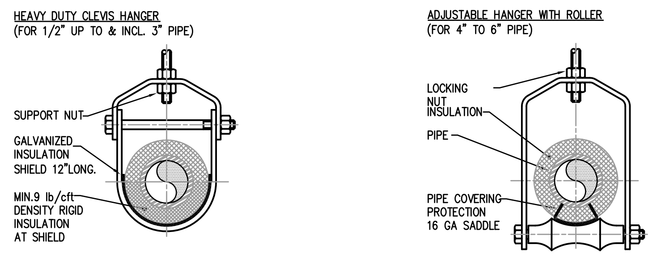

NOTES:
1. SEE SPECIFICATION FOR HANGER SIZES.
2. PIPE 8" AND LARGER SHALL HAVE ROLLER SUPPORTED WITH DUAL RODS.
3. FOR CHW SERVICE OVER 3" REPLACE SADDLE WITH 12" LONG 14 GA SHIELD WITH RIGID INSULATION BETWEEN PIPE AND SHIELD.

1 PIPE HANGER SUPPORT DETAIL

SCALE: NO SCALE

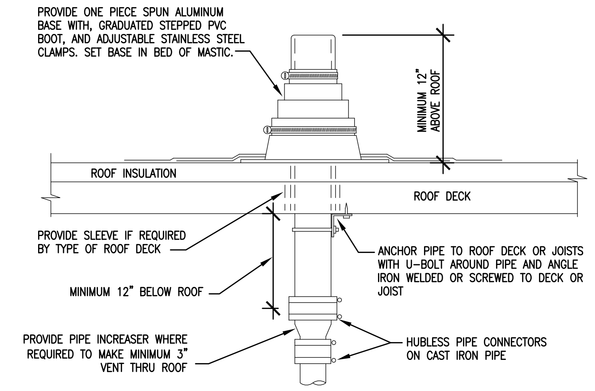

REFER TO PLAN FOR VTR PIPE SIZES AND LOCATIONS. LOCATE VTR MINIMUM TEN FEET HORIZONTAL OR THREE FEET VERTICAL ABOVE ANY BUILDING OPENING OR FRESH AIR INTAKE, AND ONE FOOT FROM ANY VERTICAL SURFACE. VERIFY FLASHING AND COUNTERFLASHING WITH ROOFING CONTRACTOR.

2 PLUMBING VENT THROUGH ROOF DETAIL

SCALE: NO SCALE

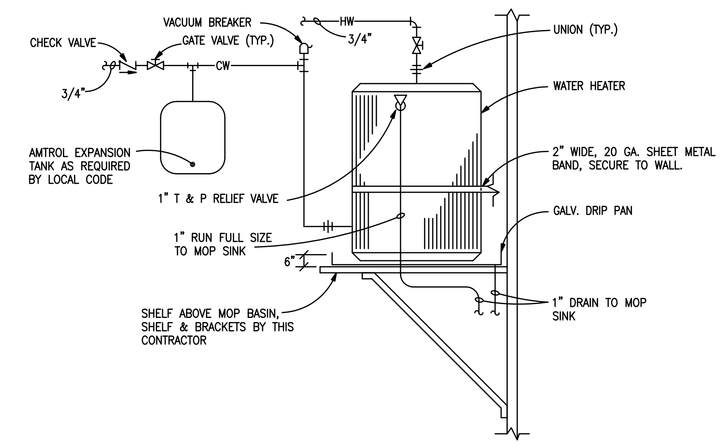

3 EWH-1 - ELECTRIC WATER HEATER (STORAGE) DETAIL

SCALE: NO SCALE

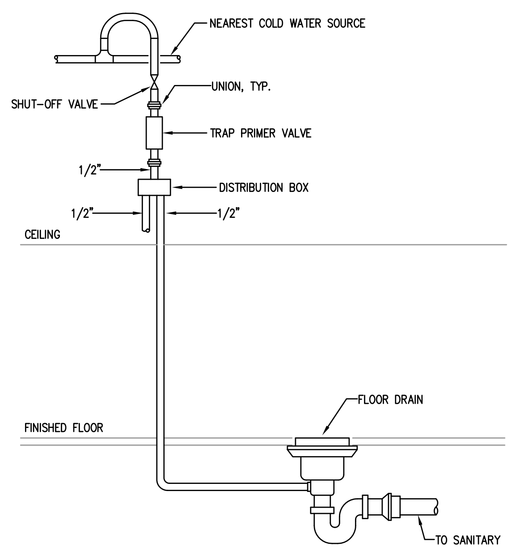

4 TRAP PRIMER VALVE DETAIL

SCALE: NO SCALE

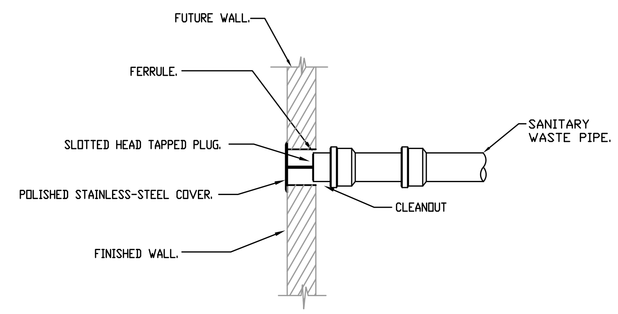

5 WALL CLEANOUT DETAIL

SCALE: NO SCALE

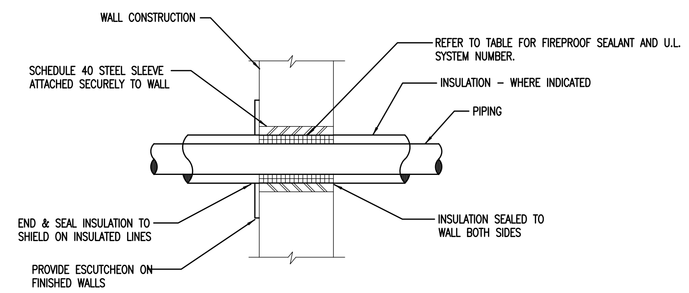

FIRE SLEEVE PENETRATION SCHEDULE

PENETRATING ITEM	MAX. SIZE	CONSTRUCTION	"F" RATING	SLEEVE REQ'D?	MATERIAL TYPE(+)	INSUL. TYPE & THICKNESS	U.L. SYSTEM #
METALLIC PIPE	12"	GYP. BOARD WALL	1,2,3,&4 HR.	NO	3M CP-25 W/B +	N/A	WL1001
METALLIC PIPE	12"	GYP. BOARD WALL	1&2 HR.	YES	3M CP-25 W/B +	N/A	WL1003
INSUL. METALLIC	12"	GYP. BOARD WALL	1&2 HR.	NO	3M FS-195 +	FIBERGLASS - 1"-2"	WL5001
INSUL. METALLIC	4"	GYP. BOARD WALL	1&2 HR.	NO	3M CP-25 W/B +	FIBERGLASS - 1"-2"	WL5039

(+)NOTE: 3M PRODUCTS LISTED FOR COMPARATIVE REFERENCE. SIMILAR PRODUCTS BY LISTED MANUFACTURERS ARE ACCEPTABLE. REFER TO SECTION 078413 OF THE SPECIFICATIONS.

6 PIPE THROUGH FIRE-RATED ASSEMBLY DETAIL

SCALE: NO SCALE

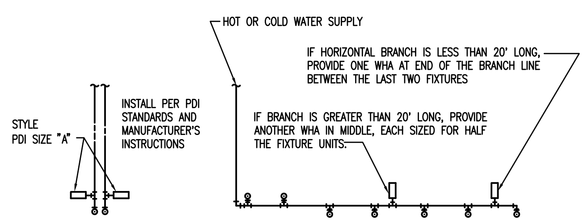

SINGLE FIXTURE

J.R. SMITH NO.#	PDI SYMBOL	WHA PIPE SIZE	FIXTURE UNIT LOAD
5005	A	3/4"	1-11
5010	B	1"	12-32
5020	C	1"	33-60
5030	D	1"	61-113
5040	E	1"	114-154
5050	F	1"	155-330

MULTIPLE FIXTURES

FIXTURE UNIT TABULATION		
FIXTURE	COLD	HOT
VALVE WATER CLOSET	10	--
URINAL	4	--
KITCHEN SINK	1.5	1.5
LAVATORY	1.5	1.5
MOP BASIN	2.25	2.25
WATER COOLER	.25	--

PROVIDE WATER HAMMER ARRESTERS BY J.R. SMITH, PRECISION PLUMBING PRODUCTS, WATTS, SIOUX CHIEF OR APPROVED EQUAL CERTIFIED BY PDI #WH-201, ASSE #1010 AND ANSI #A112.26.1M.
ALWAYS INSTALL IN UPRIGHT POSITION.
SIZE UNITS PER TABLES ABOVE.

7 WATER HAMMER ARRESTERS

SCALE: NO SCALE

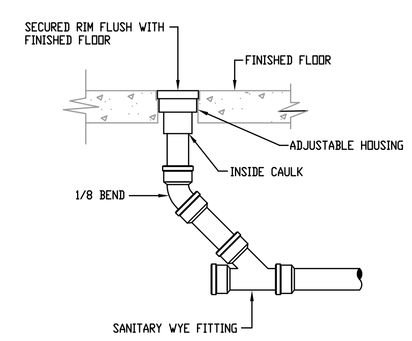

8 FLOOR CLEANOUT DETAIL

SCALE: NO SCALE

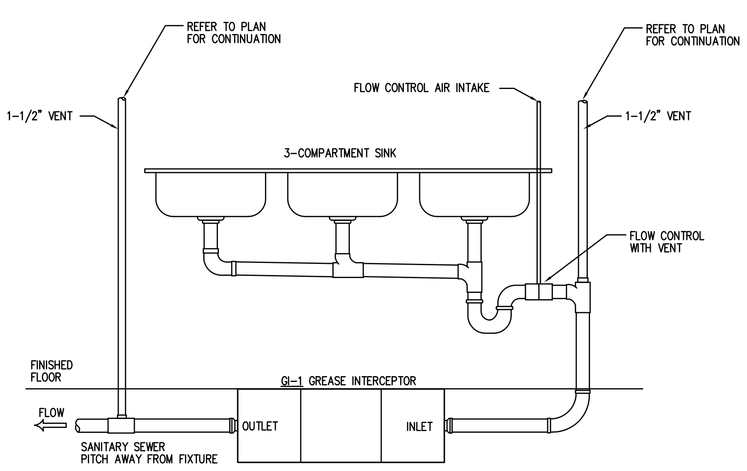

9 GREASE INTERCEPTOR DETAIL

SCALE: NO SCALE

DATES AND REVISIONS

No.	Date/Description
	04.11.12 - BID

EXCHANGE™

RICHARD L. BOWEN + ASSOCIATES INC.
ARCHITECTS • ENGINEERS • CONSTRUCTION MANAGERS
13000 Shaker Boulevard / Cleveland, Ohio 44120
Phone: (216) 491-9300 Fax: (216) 491-8053
www.rlba.com - email@rlba.com

FT. MYER EXCHANGE
JBMHH - MYER
ARLINGTON, VIRGINIA

PLUMBING DETAILS

DRAWN BY: KAF
CHECKED BY: KAF
RLB NO.: 7800.02

DRAWING NO.
P2.2

P:\7800\7800.02 FT. MYER PX IMAGE UPGRADE CONST. CONTRACT DOCS\MEDIA\780002_P02-02.DWG | PLOTTED 04.09.2012 09:23AM BY MIKHAIL ALEKSEYEV

CODED NOTES - FLOOR PLAN

1. EXISTING SUPPLY DUCT UP TO AHU-4 IN PENTHOUSE TO REMAIN.
2. EXISTING SUPPLY DUCT UP TO AHU-5 IN PENTHOUSE TO REMAIN.
3. EXISTING SUPPLY DUCT UP TO AHU-6 IN PENTHOUSE TO REMAIN.
4. EXISTING SUPPLY DUCT UP TO AHU-7A IN PENTHOUSE TO REMAIN.
5. EXISTING SUPPLY DUCT UP TO AHU-7B IN PENTHOUSE TO REMAIN.
6. EXISTING RETURN DUCT UP TO AHU-4 IN PENTHOUSE TO REMAIN.
7. EXISTING RETURN DUCT UP TO AHU-5 IN PENTHOUSE TO REMAIN.
8. EXISTING RETURN DUCT UP TO AHU-6 IN PENTHOUSE TO REMAIN.
9. EXISTING RETURN DUCT UP TO AHU-7A IN PENTHOUSE TO REMAIN.
10. EXISTING RETURN DUCT UP TO AHU-7B IN PENTHOUSE TO REMAIN.
11. EXISTING RETURN AIR OPENING AND ASSOCIATED DUCTWORK TO REMAIN.
12. REMOVE EXISTING PNEUMATIC HOT WATER REHEAT VAV BOX. DISCONNECT HWS & HWR PIPING, LEAVING RUNOUT PIPING FOR FUTURE RE-CONNECTION. REMOVE INLET DUCT. REMOVE ALL CONNECTED DIFFUSERS AND ASSOCIATED RUNOUT DUCTS.

CODED NOTES - FLOOR PLAN (CONT.)

13. REMOVE EXISTING PNEUMATIC THERMOSTAT.
14. DISCONNECT ABANDONED PNEUMATIC CONTROL TUBING AS FAR BACK AS POSSIBLE. CRIMP ANY UNUSED OPEN BRANCHES TO PREVENT COMPRESSED AIR LEAKAGE.
15. PATCH ABANDONED TAKE-OFF IN MAIN SUPPLY DUCT.
16. REMOVE EXISTING DIFFUSER AND RUNOUT DUCT. PATCH ABANDONED TAKE-OFF AT MAIN SUPPLY TRUNK.
17. REMOVE EXISTING TRUNK DUCT DOWNSTREAM OF VAV BOX, WITH ALL ASSOCIATED DIFFUSERS AND RUNOUT DUCTS.
18. REMOVE EXISTING DIFFUSER AND RUNOUT DUCT.
19. REMOVE EXISTING SUPPLY TRUNK.
20. REMOVE EXISTING DIFFUSER AND ASSOCIATED RUNOUT DUCT. PATCH ANY ABANDONED TAKE-OFFS AT EXISTING MAINS TO REMAIN.
21. EXISTING HOT WATER CONVECTOR TO REMAIN.
22. NO WORK IN THIS AREA.
23. REMOVE EXISTING SUPPLY TRUNK FROM THIS POINT ON.
24. REMOVE EXISTING RETURN TRUNK FROM THIS POINT ON.
25. REMOVE EXISTING CANOPY HOOD FROM OPTICAL LAB AND SAVE FOR RE-INSTALLATION IN NEW LOCATION. SEE DWG. M1.1.

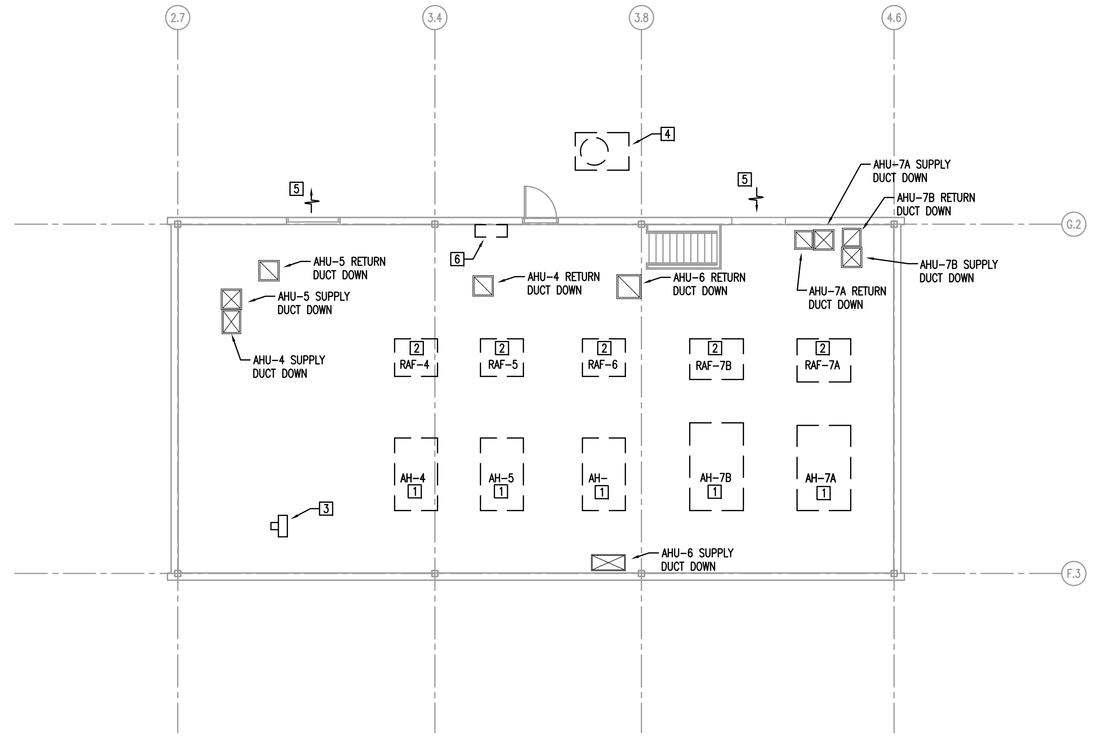

2 MD1.1 MECHANICAL PENTHOUSE MECHANICAL DEMOLITION PLAN
SCALE: 1/8" = 1'-0"

CODED NOTES - PENTHOUSE

1. EXISTING AIR HANDLING UNIT TO REMAIN.
2. EXISTING RETURN AIR FAN TO REMAIN.
3. EXISTING HOT WATER UNIT HEATER TO REMAIN.
4. EXISTING LENNOX 10-TON CONDENSING UNIT TO REMAIN.
5. EXISTING LOUVER TO REMAIN.
6. EXISTING PNEUMATIC CONTROL PANEL TO REMAIN.

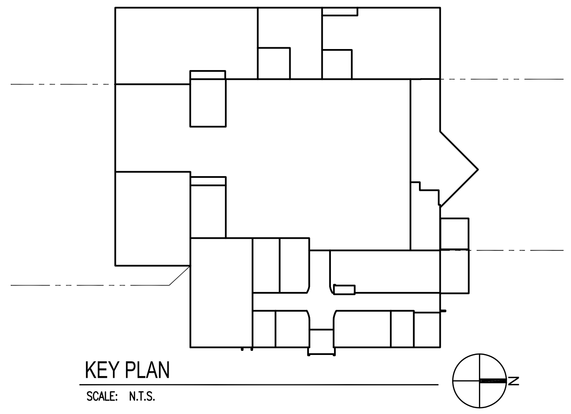

KEY PLAN
SCALE: N.T.S.

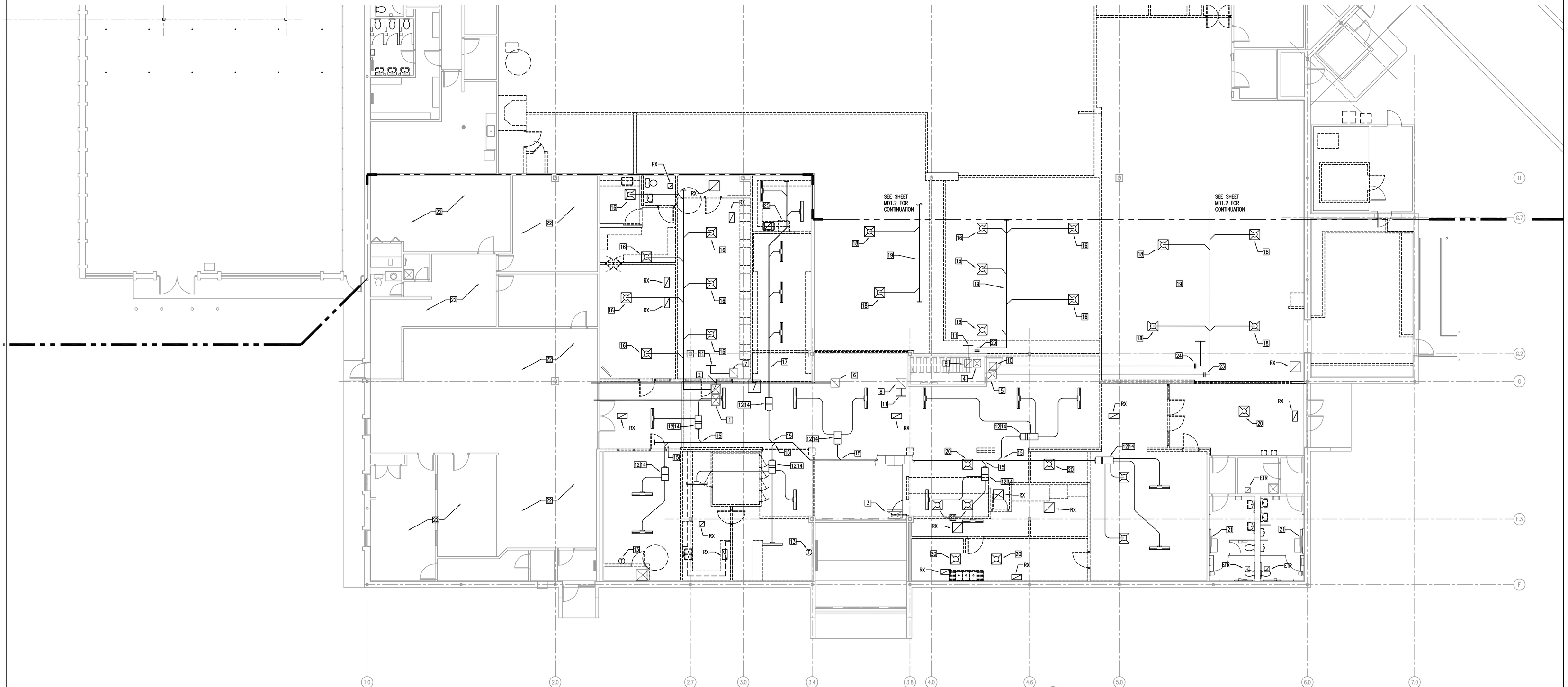

1 MD1.1 ENLARGED MALL & FOOD COURT MECHANICAL DEMOLITION PLAN
SCALE: 1/8" = 1'-0"

1 ROOF PLAN

DATES AND REVISIONS	
No.	Date/Description
	04.11.12 – BID

EXCHANGE™

RICHARD L. BOWEN + ASSOCIATES INC.
13000 Shaker Boulevard / Cleveland, Ohio 44120
Phone: (216) 491-9300 Fax: (216) 491-8053
www.rlba.com • email@rlba.com

FT. MYER EXCHANGE
JBMHH - MYER
ARLINGTON, VIRGINIA

MECHANICAL DEMOLITION PLAN (1 OF 3)

DRAWN BY: KAF
CHECKED BY: KAF
RLB NO.: 7800.02

DRAWING NO.
MD1.1

P:\7800\7800.02 FT. MYER PX IMAGE UPGRADE CONST. CONTRACT DOCS\MECH\7800002_MD001-01.DWG | PLOTTED 04.09.2012 09:19AM BY MIKHAIL ALEKSEYEV

CODED NOTES

1. EXISTING AIR HANDLING UNIT TO REMAIN.
2. EXISTING RETURN AIR FAN TO REMAIN.
3. REMOVE EXISTING SUPPLY TRUNK.
4. REMOVE EXISTING DIFFUSER AND RUNOUT DUCT.
5. EXISTING OUTSIDE AIR AND RELIEF AIR DUCTS TO REMAIN.
6. EXISTING SUPPLY TRUNK TO REMAIN.
7. NOT USED.
8. SEE PLAN 1/MD2.1 THIS SHEET FOR CONTINUATION.
9. SEE PLAN 2/MD2.1 THIS SHEET FOR WORK ON MEZZANINE ABOVE THIS AREA.
10. SEE PLAN 2/MD2.1 THIS SHEET FOR CONTINUATION.
11. REMOVE EXISTING RETURN GRILLE AND ASSOCIATED DUCTWORK.
12. REMOVE EXISTING EXHAUST GRILLES AND ASSOCIATED DUCTWORK.

CODED NOTES (CONT.)

13. REMOVE EXISTING EXHAUST RISER UP TO ROOF.
14. REMOVE EXISTING DIFFUSER AND RUNOUT DUCT. PATCH ABANDONED TAKE-OFF AT MAIN SUPPLY TRUNK.
15. REMOVE EXISTING DIFFUSER AND RUNOUT DUCT BACK TO TAKE-OFF FROM FROM BRANCH. TAKE-OFF TO REMAIN.
16. REMOVE EXISTING RETURN GRILLE.
17. BOTTOM OF EXISTING SUPPLY TRUNK AT 11'-7" AFF. REMOVE DUCT IN ORDER TO RAISE IT TO CLEAR NEW 12'-0" CEILING.
18. EXISTING SUPPLY TRUNK TO REMAIN ABOVE EXISTING CEILING.
19. TWO EXISTING SENSORS ON THIS WALL, APPARENTLY ASSOCIATED WITH AHU-1. DETERMINE IF SENSORS ARE ACTIVE, WHAT THEY CONTROL, AND IF THEY ARE SERVICEABLE. REPORT FINDINGS TO ENGINEER.
20. REMOVE EXISTING DIFFUSER. EXISTING RUNOUT DUCT TO REMAIN.

CODED NOTES (CONT.)

21. REMOVE EXISTING CEILING MOUNTED HORIZONTAL FAN COIL UNIT. SAVE FOR RE-INSTALLATION IN NEW LOCATION. SEE SHEET M1.2.
22. DISCONNECT HWS, HWR, CHWS & CHWR PIPING AT REMOVED FAN COIL UNIT. CAP TEMPORARILY FOR FUTURE RE-CONNECTION.
23. NO WORK IN THIS AREA.
24. REMOVE EXISTING SUPPLY TRUNK FROM THIS POINT ON.
25. THREE EXISTING SENSORS ON THIS WALL, APPARENTLY ASSOCIATED WITH AHU-7A. DETERMINE IF SENSORS ARE ACTIVE, WHAT THEY CONTROL, AND IF THEY ARE SERVICEABLE. REPORT FINDINGS TO ENGINEER.
26. EXISTING SUPPLY REGISTER TO REMAIN.

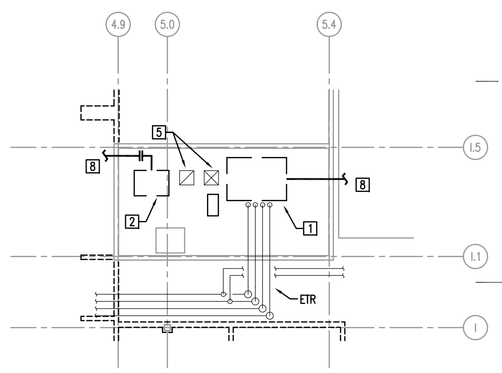

2 MD1.2 MECHANICAL MEZZANINE DEMOLITION PLAN
SCALE: 1/8" = 1'-0"
0 1' 2' 4' 8'

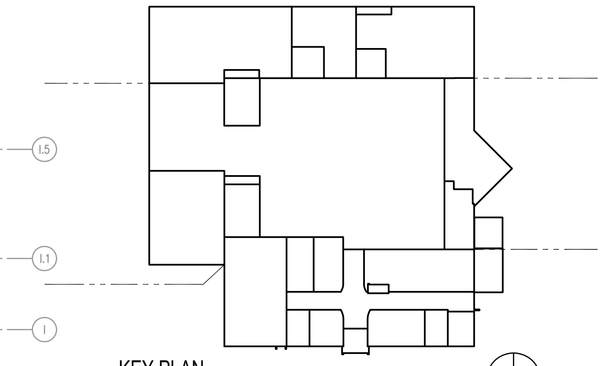

KEY PLAN
SCALE: N.T.S.

N TRUE NORTH

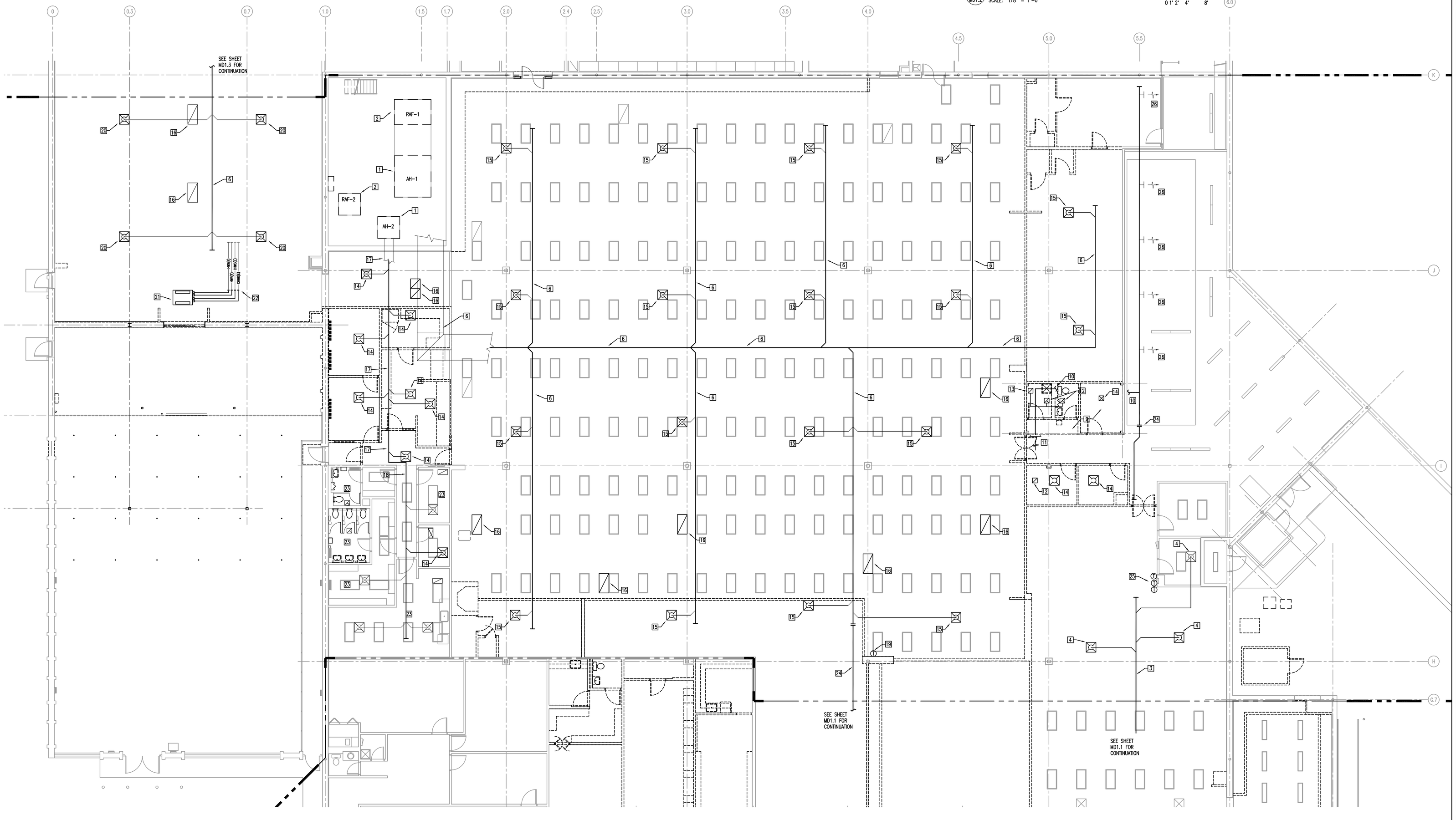

1 MD1.2 ENLARGED RETAIL SALES AREA MECHANICAL DEMOLITION PLAN
SCALE: 1/8" = 1'-0"
0 1' 2' 4' 8'
N TRUE NORTH

DATES AND REVISIONS	
No.	Date/Description
	04.11.12 – BID

EXCHANGE™

RICHARD L. BOWEN + ASSOCIATES INC.
13000 Shaker Boulevard / Cleveland, Ohio 44120
Phone: (216) 491-9300 Fax: (216) 491-8053
www.rlba.com - email@rlba.com

FT. MYER EXCHANGE
JBMHH - MYER
ARLINGTON, VIRGINIA

MECHANICAL DEMOLITION PLAN (2 OF 3)

DRAWN BY: KAF
CHECKED BY: KAF
RLB NO.: 7800.02

DRAWING NO.
MD1.2

P:\7800\7800.02 FT. MYER PX IMAGE UPGRADE CONST. CONTRACT DOCS\MECH\780002_MD01-02.DWG | PLOTTED 04.09.2012 09:19AM BY MIKHAIL ALEKSEYEV

DATES AND REVISIONS		
No.	Date/Description	
	04.11.12 – BID	

EXCHANGE™

RICHARD L. BOWEN
+ ASSOCIATES INC.
13000 Shaker Boulevard / Cleveland, Ohio 44120
Phone: (216) 491-9300 Fax: (216) 491-8053
www.rlba.com - email@rlba.com

ENGINEERS • ARCHITECTS • CONSTRUCTION MANAGERS

FT. MYER EXCHANGE
JBMHH - MYER
ARLINGTON, VIRGINIA

MECHANICAL DEMOLITION PLAN (3 OF 3)

DRAWN BY: KAF
CHECKED BY: KAF
RLB NO.: 7800.02
DRAWING NO. MD1.3

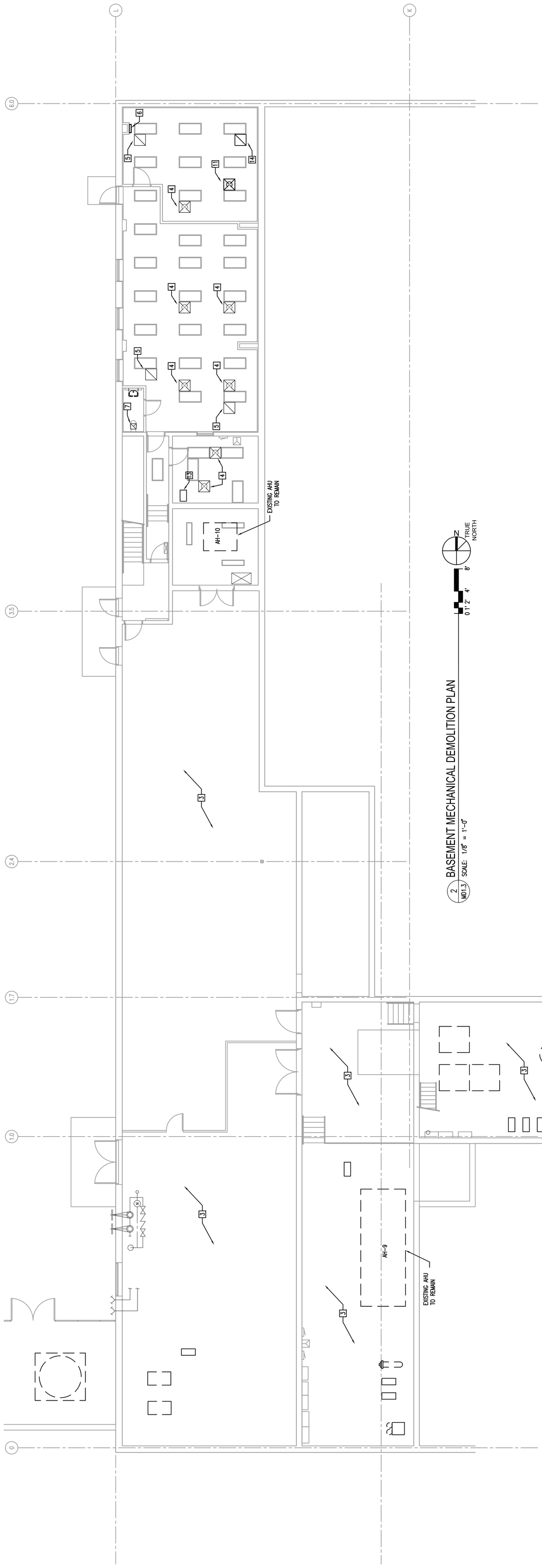

2 MD1.3 BASEMENT MECHANICAL DEMOLITION PLAN
SCALE: 1/8" = 1'-0"

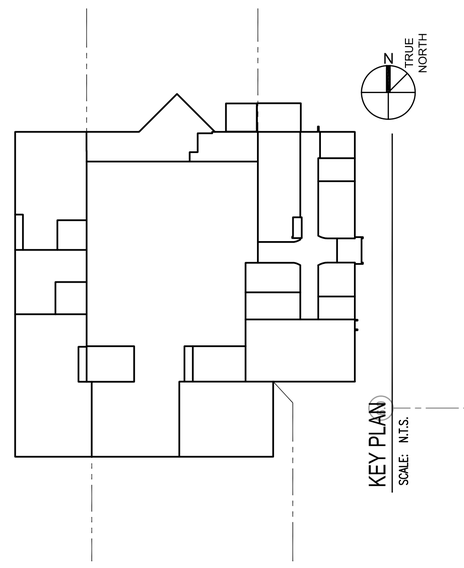

KEY PLAN
SCALE: N.T.S.

CODED NOTES (CONT.)

1. REMOVE EXISTING RETURN GRILLE.
2. REMOVE EXISTING DIFFUSER. EXISTING RUNOUT DUCT TO REMAIN.
3. NO WORK IN THIS AREA.
4. EXISTING CEILING DIFFUSER TO REMAIN.
5. EXISTING RETURN GRILLE TO REMAIN.
6. EXISTING PNEUMATIC CONTROL PANEL AND THERMOSTAT TO REMAIN.
7. EXISTING EXHAUST FAN AND GRILLE TO REMAIN.
8. EXISTING DUCT ON MEZZANINE LEVEL TO REMAIN.
9. EXISTING SUPPLY TRUNK TO REMAIN.
10. EXISTING BRANCH UNDER MEZZANINE TO REMAIN.
11. REMOVE EXISTING DIFFUSER. SAVE FOR RE-INSTALLATION IN NEW LOCATION. SEE DWG. M1.3.
12. EXISTING SUPPLY REGISTER ON MEZZANINE TO REMAIN.
13. EXISTING DX AIR HANDLING UNIT TO REMAIN.
14. REMOVE EXISTING RETURN GRILLE. SAVE FOR RE-INSTALLATION IN NEW LOCATION. SEE DWG. M1.3.

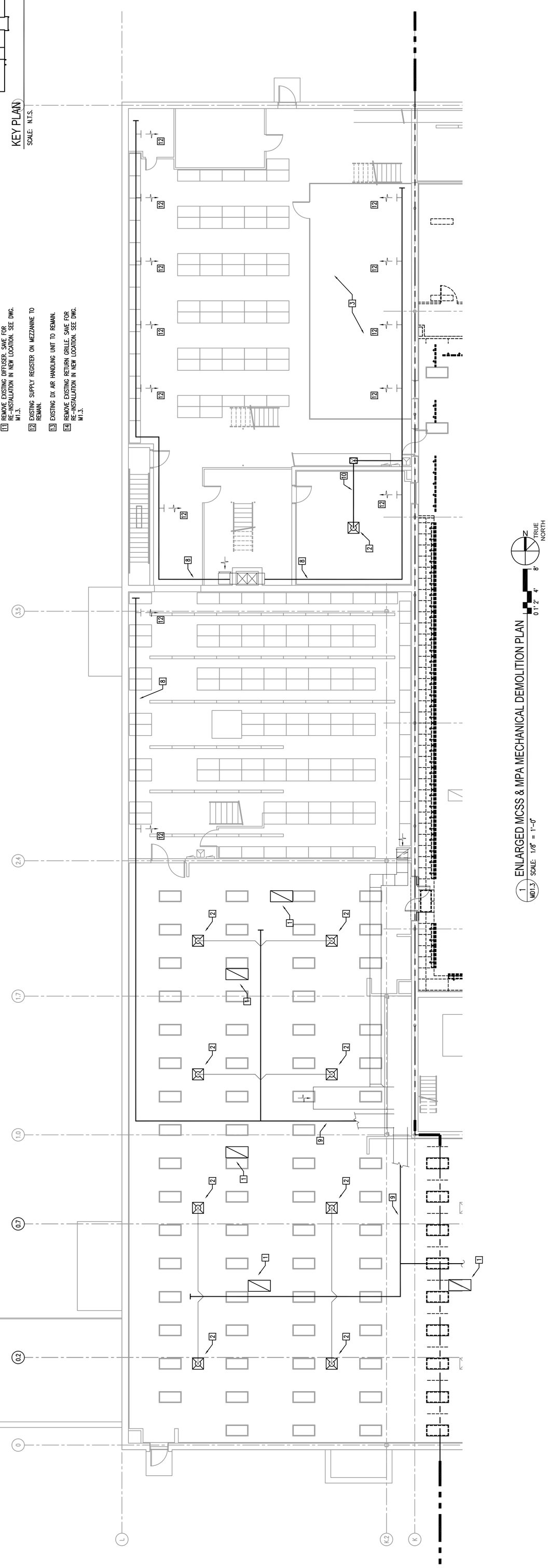

1 MD1.3 ENLARGED MCSS & MPA MECHANICAL DEMOLITION PLAN
SCALE: 1/8" = 1'-0"

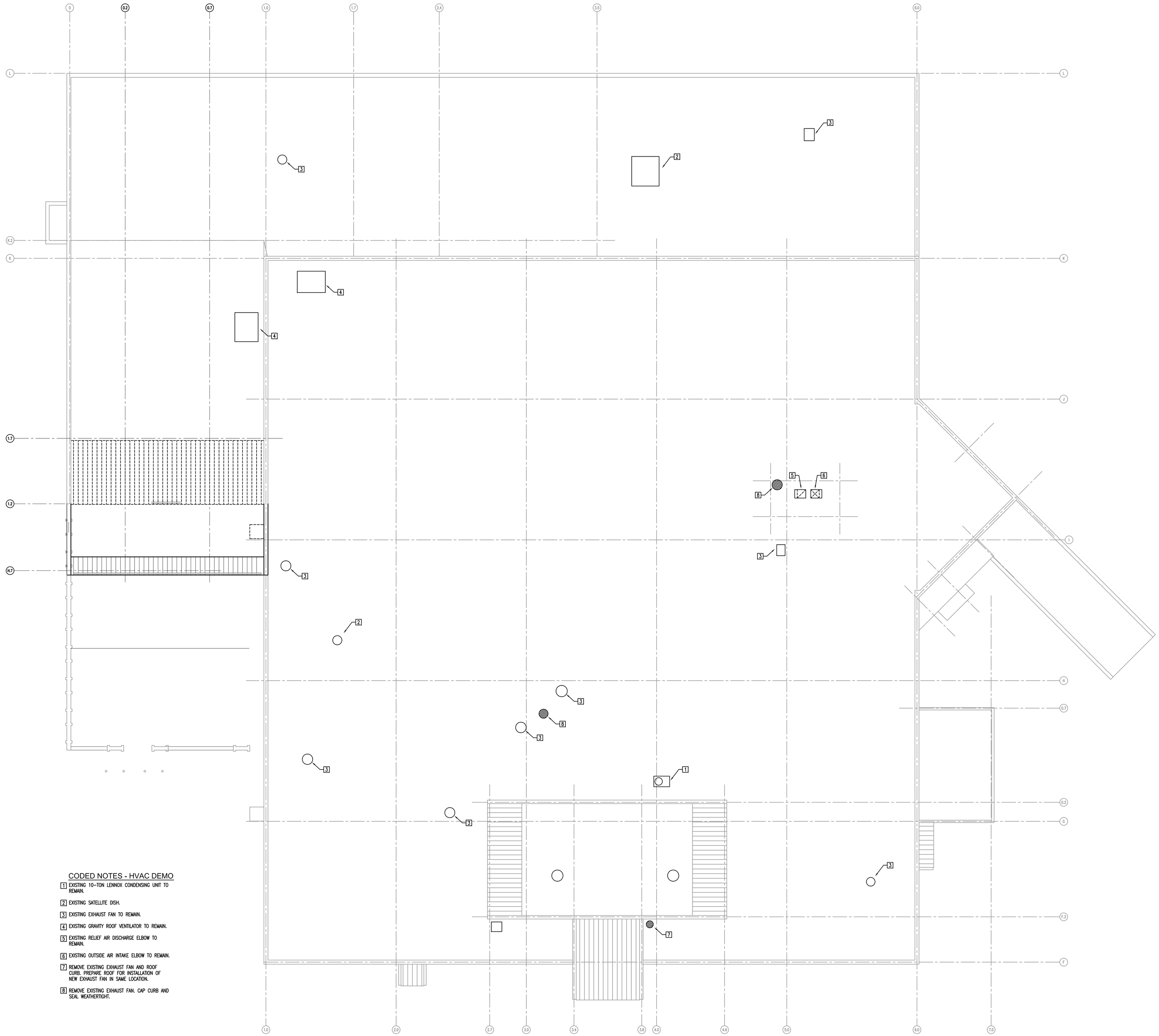

CODED NOTES - HVAC DEMO

1. EXISTING 10-TON LENNOX CONDENSING UNIT TO REMAIN.
2. EXISTING SATELLITE DISH.
3. EXISTING EXHAUST FAN TO REMAIN.
4. EXISTING GRAVITY ROOF VENTILATOR TO REMAIN.
5. EXISTING RELIEF AIR DISCHARGE ELBOW TO REMAIN.
6. EXISTING OUTSIDE AIR INTAKE ELBOW TO REMAIN.
7. REMOVE EXISTING EXHAUST FAN AND ROOF CURB. PREPARE ROOF FOR INSTALLATION OF NEW EXHAUST FAN IN SAME LOCATION.
8. REMOVE EXISTING EXHAUST FAN. CAP CURB AND SEAL WEATHERTIGHT.

1 / M2.0 ROOF PLAN
SCALE: 3/32" = 1'-0"

0 2' 4' 8' 16'

TRUE NORTH

DATES AND REVISIONS	
No.	Date/Description
	04.11.12 – BID

EXCHANGE™

RICHARD L. BOWEN + ASSOCIATES INC.
13000 Shaker Boulevard / Cleveland, Ohio 44120
Phone: (216) 491-9300 Fax: (216) 491-8053
www.rlba.com - email@rlba.com

FT. MYER EXCHANGE
JBMHH - MYER
ARLINGTON, VIRGINIA

ROOF PLAN - HVAC DEMO

DRAWN BY: KAF
CHECKED BY: KAF
RLB NO.: 7800.02

DRAWING NO.
MD2.0

P:\7800\7800.02 FT. MYER PX IMAGE UPGRADE CONST. CONTRACT DOCS\MEDA\7800002_MD02-00.DWG | PLOTTED 04.09.2012 09:19AM BY MIKHAIL ALEKSEYEV

HVAC SYMBOLS AND ABBREVIATIONS

SYMBOL	DESCRIPTION
	TURNING VANES
	VOLUME DAMPER
F	FIRE DAMPER
S	SMOKE DAMPER
	SMOKE DETECTOR (BY EC)
	MOTOR OR PNEUMATICALLY OPERATED DAMPER
	SUPPLY DUCT
	RETURN OR EXHAUST DUCT
	FLEXIBLE DUCT CONNECTION
	ACOUSTICALLY LINED DUCTWORK
	EXISTING DUCTWORK & EQUIPMENT
	EXISTING DUCTWORK & EQUIPMENT TO BE REMOVED
	BALANCING VALVE
	BACKFLOW PREVENTER
	CHECK VALVE
	FLEXIBLE PIPE CONNECTION
	PRESSURE REDUCING VALVE
	REMOVE TO POINT AND CAP
	REMOVE TO POINT FOR RECONNECTION
	SHUT OFF VALVE
	UNION
	PIPE BRANCH TAKE-OFF FROM BOTTOM
	PIPE BRANCH TAKE-OFF FROM TOP
	PIPE DROP
	PIPE RISE
CD	A/C CONDENSATE DRAIN PIPING
HHWR	HEATING HOT WATER RETURN PIPING
HHWS	HEATING HOT WATER SUPPLY PIPING
PD	PUMP DISCHARGE PIPING
L	REFRIGERANT LIQUID PIPING
S	REFRIGERANT SUCTION PIPING
	CONNECTION TO EXISTING
C	CONTROLLER
T	THERMOSTAT
S	SENSOR
SN	NIGHT SENSOR
UCD	UNDERCUT DOOR
	AIRFLOW DIRECTION
	PETE'S PLUG
	PRESSURE GAUGE
	RELIEF OR SAFETY VALVE
	THERMOMETER
AD	ACCESS DOOR
AFF	ABOVE FINISHED FLOOR
AL	ACOUSTICAL LINING
AV	AIR VENT
B	BOILER
CC	COOLING COIL
CEIL	CEILING
CO	CLEAN OUT
CTE	CONNECT TO EXISTING
CU	CONDENSING UNIT
CV	CONSTANT VOLUME

HVAC SYMBOLS AND ABBREVIATIONS

SYMBOL	DESCRIPTION
EAT	ENTERING AIR TEMPERATURE
EC	ELECTRICAL CONTRACTOR
EF	EXHAUST FAN
EG	EXHAUST GRILLE
ER	EXHAUST REGISTER
ETR	EXISTING TO REMAIN
EUH	ELECTRIC UNIT HEATER
EWT	ENTERING WATER TEMPERATURE
HC	HEATING COIL
HRU	HEAT RECOVERY UNIT
IRH	INFRARED RADIANT HEATER
IWH	INDIRECT WATER HEATER
LAT	LEAVING AIR TEMPERATURE
LWT	LEAVING WATER TEMPERATURE
MC	MECHANICAL CONTRACTOR
MCA	MINIMUM CIRCUIT AMPERAGE
MOD	MOTOR OPERATED DAMPER
MOP	MAXIMUM OVERCURRENT PROTECTION
OA	OUTSIDE AIR
P	PUMP
PC	PLUMBING CONTRACTOR
RA	RETURN AIR
RG	RETURN GRILLE
RR	RETURN REGISTER
RX	REMOVE EXISTING
SA	SUPPLY AIR
SF	SUPPLY FAN
SG	SUPPLY GRILLE
SO	SUPPLY OUTLET
SR	SUPPLY REGISTER
SS	STAINLESS STEEL
SV	SAFETY VALVE
TCP	TEMPERATURE CONTROL PANEL
TG	TRANSFER GRILLE
VAV	VARIABLE AIR VOLUME
VR	VARIABLE REFRIGERANT
VD	VOLUME DAMPER
VFD	VARIABLE FREQUENCY DRIVE
VF	VENTILATION FAN
VVT	VARIABLE VOLUME VARIABLE TEMPERATURE

GENERAL HVAC NOTES:

1. THE HVAC SYSTEM INSTALLATION SHALL BE IN ACCORDANCE WITH NFPA AND INTERNATIONAL CODES AND ALL LOCAL CODES AND ORDINANCES.
2. DRAWINGS ARE DIAGRAMMATIC. INDICATED POSITIONS SHALL BE FOLLOWED AS CLOSELY AS POSSIBLE, EXACT EQUIPMENT LOCATIONS AND DUCTWORK AND PIPING ROUTING SHALL BE SUBJECT TO BUILDING CONSTRUCTION AND INTERFERENCES WITH OTHER TRADES.
3. ALTHOUGH ATTEMPTS HAVE BEEN MADE TO IDENTIFY EXISTING EQUIPMENT LOCATIONS, PIPE AND DUCTWORK ROUTING AND SIZES WITH THE USE OF EXISTING DRAWINGS AND FIELD OBSERVATIONS, MC SHALL FIELD VERIFY ALL EXISTING INFORMATION. REPORT ANY DISCREPANCIES TO THE ARCHITECT OR ENGINEER. NOTE ALL DISCREPANCIES ON THE AS-BUILT DRAWINGS.
4. COORDINATE ALL WORK WITH THE PHASING OF THE PROJECT. SOME SERVICES MUST REMAIN ACTIVE TO SERVE OCCUPIED SPACES DURING CONSTRUCTION. SCHEDULE ALL SERVICE SHUTDOWNS WITH OWNER AND/OR CONSTRUCTION MANAGER.
5. UNLESS NOTED OTHERWISE ALL SERVICES INDICATED AS BEING REMOVED SHALL BE REMOVED BACK TO THE MAIN AND CAPPED. IDENTIFY ALL CAPPED SERVICES. REMOVE ALL PREVIOUSLY ABANDONED EQUIPMENT, PIPING, DUCTWORK, SUPPORT, ETC ENCOUNTERED ABOVE CEILINGS.
6. THE OWNER SHALL HAVE THE OPTION OF RETAINING ANY OR ALL REMOVED EQUIPMENT FOR SALVAGE. ALL REMOVED EQUIPMENT THAT IS NOT RETAINED BY THE OWNER, SHALL BE DISPOSED OF BY THE MC.
7. ALL CUTTING AND PATCHING, OF WALLS AND FLOORS, SHALL BE PERFORMED BY THE CONTRACTOR PERFORMING THE WORK REQUIRING THE PENETRATION. ALL PATCHING MATERIALS SHALL MATCH THE NEW CONDITIONS. ALL FINISH PAINTING TO BE BY THE GENERAL CONTRACTOR.
8. ALL FIRE-STOPPING SHALL BE PERFORMED BY THE CONTRACTOR PERFORMING THE WORK REQUIRING THE PENETRATION. REFER TO THE DETAILS PERTAINING TO TYPE AND METHOD REQUIRED.
9. REFER TO ARCHITECTURAL REFLECTED CEILING PLANS FOR EXACT LOCATIONS OF CEILING DIFFUSERS AND GRILLES.
10. ROOF MOUNTED EQUIPMENT MUST BE LOCATED AT LEAST 10 FEET FROM THE EDGE OF THE ROOF.
11. ALL EQUIPMENT, DAMPERS AND VALVES MUST BE ACCESSIBLE. IF LOCATED ABOVE DRYWALL CEILING OR BEHIND FINISHED WALLS, PROVIDE ACCESS DOOR. COORDINATE ALL ACCESS DOOR LOCATIONS WITH ARCHITECT.
12. BULLHEAD CONNECTIONS IN PIPING ARE PROHIBITED.
13. PROVIDE AIR VENTS IN PIPING SYSTEMS AS REQUIRED FOR COMPLETE AIR ELIMINATION. PROVIDE HOSE END DRAIN VALVES AS REQUIRED TO PERMIT COMPLETE SYSTEM DRAINING. NOTE LOCATIONS ON AS-BUILT DRAWINGS.
14. INSTALL AND PROPERLY SUPPORT FLEXIBLE DUCTWORK TO AVOID ANY AIRFLOW RESTRICTIONS, NO KINKS OR CRIMPS ARE PERMITTED.
15. PROVIDE VOLUME DAMPER HANDLE EXTENSIONS FOR VOLUME DAMPERS INSTALLED IN INSULATED DUCTWORK.
16. DO NOT SUPPORT DUCTWORK OR PIPING FROM ANOTHER DUCT, PIPE OR CONDUIT. DO NOT SUPPORT ANY ITEM FROM METAL ROOF DECK.
17. MC SHALL PROVIDE AND SET REQUIRED AND SPECIFIED EQUIPMENT CURBS. GC SHALL PROVIDE FLASHING FOR FOR ALL ROOFING WORK.
18. DURING CONSTRUCTION, PROVIDE COVERS FOR ALL SUPPLY, RETURN AND EXHAUST DUCTWORK OPENINGS TO PREVENT CONSTRUCTION DUST FROM ENTERING THE DUCTWORK. IF DUST COLLECTS INSIDE DUCTWORK, DUCTWORK MUST BE CLEANED PRIOR TO PROJECT TURNOVER.
19. DUCTWORK SHALL BE PRESSURE TESTED AS INDICATED IN THE SPECIFICATIONS. IF A SECTION OF DUCTWORK FAILS THE TEST, THE SECTION SHALL BE SEALED AND RETESTED UNTIL IT PASSES.

DATES AND REVISIONS

No.	Date/Description
	04.11.12 – BID

EXCHANGE™

RICHARD L. BOWEN + ASSOCIATES INC.
13000 Shaker Boulevard / Cleveland, Ohio 44120
Phone: (216) 491-9300 Fax: (216) 491-9053
www.rlba.com - email@rlba.com

FT. MYER EXCHANGE
JBMHH - MYER
ARLINGTON, VIRGINIA

MECHANICAL LEGENDS AND NOTES

DRAWN BY: KAF
CHECKED BY: KAF
RLB NO.: 7800.02

DRAWING NO.
M0.0

P:\7800\7800.02 FT. MYER PX IMAGE UPGRADE CONST. CONTRACT DOCS\MECH\7800X02_M00-00.DWG | PLOTTED 04.09.2012 09:13AM BY MIKHAIL ALEKSEYEV

MECHANICAL CODED NOTES

1. EXISTING SUPPLY DUCT UP TO AHU-4 IN PENTHOUSE.
2. EXISTING SUPPLY DUCT UP TO AHU-5 IN PENTHOUSE.
3. EXISTING SUPPLY DUCT UP TO AHU-6 IN PENTHOUSE.
4. EXISTING SUPPLY DUCT UP TO AHU-7A IN PENTHOUSE.
5. EXISTING SUPPLY DUCT UP TO AHU-7B IN PENTHOUSE.
6. EXISTING RETURN DUCT UP TO AHU-4 IN PENTHOUSE.
7. EXISTING RETURN DUCT UP TO AHU-5 IN PENTHOUSE.
8. EXISTING RETURN DUCT UP TO AHU-6 IN PENTHOUSE.
9. EXISTING RETURN DUCT UP TO AHU-7A IN PENTHOUSE.
10. EXISTING RETURN DUCT UP TO AHU-7B IN PENTHOUSE.
11. CONNECT TO EXISTING AHU-6 SUPPLY TRUNK AND EXTEND 14x12 AS INDICATED.
12. EXTEND 3/4" HWS AND 3/4" HWR RUNOUTS FROM EXISTING MAINS TO CV BOX REHEAT COIL.
13. CONNECT TO EXISTING HWS & HWR PIPING AT LOCATION OF DEMO'D CUH AND EXTEND TO NEW CUH.
14. MOUNT FCU-2 ON WALL WITH TOP OF UNIT @ 6" BELOW CEILING. MOUNT HARD-WIRED REMOTE CONTROLLER ON WALL NEXT TO CV-14 SENSOR. EXTEND 1/2" O.D. RG AND 1/4" O.D. RL UP TO CU-2 ON ROOF.
15. EXTEND 1/4" PUMP DISCHARGE FROM CONDENSATE PUMP TO INDIRECT WASTER AT MOP BASIN IN JANITOR'S CLOSET.

MECHANICAL CODED NOTES (CONT.)

16. INSTALL NEW TEMPERATURE SENSOR COMPATIBLE WITH EXISTING HONEYWELL DDC CONTROLS. EXTEND CONTROL WIRING TO EXISTING HONEYWELL DDC CONTROLLER IN PENTHOUSE MECHANICAL ROOM.
17. 9x9 WELDED BLACK STEEL GREASE DUCT UP FROM KH-1 TO EF-3. OFFSET AS NECESSARY. SEE DETAIL 11/M4.1.
18. 16x12 WELDED BLACK STEEL GREASE DUCT UP FROM KH-2 TO EF-4. OFFSET AS NECESSARY. SEE DETAIL 11/M4.1.
19. RE-BALANCE EXISTING AHU-5 TO 2280 CFM SUPPLY AIR AND 400 CFM OUTSIDE AIR. SEE DETAIL 12/M4.1.
20. RE-BALANCE EXISTING AHU-6 TO 5850 CFM SUPPLY AIR AND 1000 CFM OUTSIDE AIR. SEE DETAIL 12/M4.1.
21. RE-BALANCE EXISTING AHU-7A TO 3000 CFM SUPPLY AIR AND 900 CFM OUTSIDE AIR. SEE DETAIL 12/M4.1.
22. RE-BALANCE EXISTING AHU-7B TO 1450 CFM SUPPLY AIR AND 200 CFM OUTSIDE AIR. SEE DETAIL 12/M4.1.
23. INSTALL RE-LOCATED EXISTING CANOPY HOOD SALVAGED FROM OPTICAL LAB DEMOLITION (SEE DWG. MD1.1). MOUNT BELOW CEILING.
24. CONNECT 12x12x24" HIGH S.S. EXHAUST PLENUM TO EXISTING CANOPY HOOD DUCT COLLAR. (VERIFY SIZE IN FIELD). CONNECT 10x10 S.S. EXHAUST DUCT TO PLENUM AND EXTEND TO EF-5.
25. 10x10 S.S. EXHAUST DUCT UP TO EF-5.
26. ROUTE DUCT BETWEEN JOISTS. VERIFY LOCATION IN FIELD.

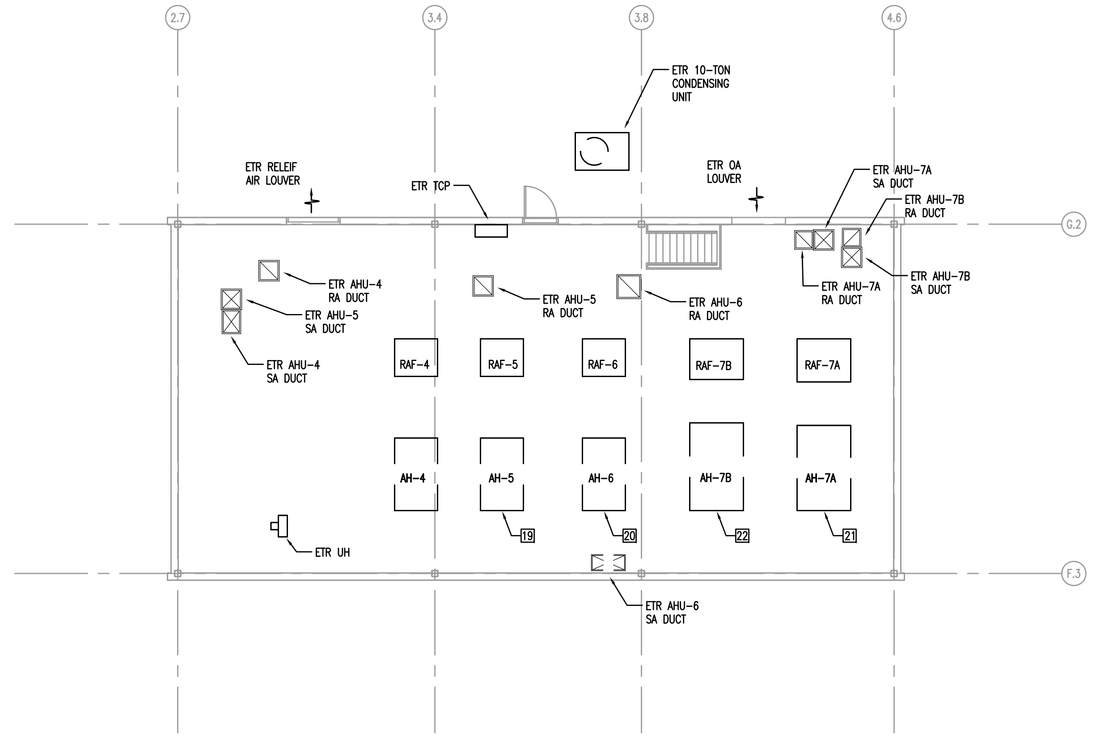

2 / M1.1 MECHANICAL PENTHOUSE MECHANICAL PLAN
SCALE: 1/8" = 1'-0"
0 1' 2' 4' 8'
TRUE NORTH

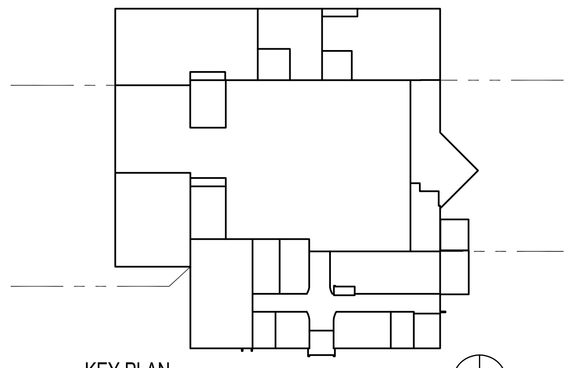

KEY PLAN
SCALE: N.T.S.
TRUE NORTH

GENERAL NOTES:

1. DUCT SIZES INDICATED ARE CLEAR INSIDE DIMENSIONS. MAKE ALLOWANCE FOR LINING WHERE REQUIRED.
2. RUNOUT DUCTS TO DIFFUSERS ARE SAME SIZE AS CONNECTED DIFFUSER UNLESS INDICATED OTHERWISE.
3. BRANCH DUCTS TO CV TERMINALS ARE SAME SIZE AS CV TERMINAL UNLESS INDICATED OTHERWISE.
4. LIMIT FLEX DUCT TO NO MORE THAN 5 FEET PER DIFFUSER.
5. NEW DDC CONTROLS SHALL BE COMPATIBLE WITH EXISTING HONEYWELL DDC SYSTEM VIA BACNET INTERFACE.

1 / M1.1 ENLARGED MALL & FOOD COURT MECHANICAL PLAN
SCALE: 1/8" = 1'-0"
0 1' 2' 4' 8'
TRUE NORTH

DATES AND REVISIONS	
No.	Date/Description
	04.11.12 – BID

EXCHANGE™

RICHARD L. BOWEN + ASSOCIATES INC.
ARCHITECTS • ENGINEERS • CONSTRUCTION MANAGERS
13000 Shaker Boulevard / Cleveland, Ohio 44120
Phone: (216) 491-0300 Fax: (216) 491-8053
www.rlba.com - email@rlba.com

FT. MYER EXCHANGE
JBMHH - MYER
ARLINGTON, VIRGINIA

MECHANICAL PLAN (1 OF 3)

DRAWN BY: KAF
CHECKED BY: KAF
RLB NO.: 7800.02

DRAWING NO.
M1.1

P:\7800\7800.02 FT. MYER PX IMAGE UPGRADE CONST. CONTRACT DOCS\MECH\7800002_M01-01.DWG | PLOTTED 04.09.2012 09:14AM BY MIKHAIL ALEKSEYEV

GENERAL NOTES:

1. DUCT SIZES INDICATED ARE CLEAR INSIDE DIMENSIONS. MAKE ALLOWANCE FOR LINING WHERE REQUIRED.
2. RUNOUT DUCTS ARE SAME SIZE AS CONNECTED DIFFUSER UNLESS INDICATED OTHERWISE.
3. LIMIT FLEX DUCT TO NO MORE THAN 5 FEET PER DIFFUSER.
4. NEW DDC CONTROLS SHALL BE COMPATIBLE WITH EXISTING HONEYWELL DDC SYSTEM VIA BACNET INTERFACE.
5. INSULATE ALL NEW HOT WATER, CHILLED WATER AND REFRIGERANT PIPING PER SPECIFICATIONS.

CODED NOTES

1. INSTALL RELOCATED EXISTING FAN COIL UNIT IN LAY-IN CEILING, SUSPENDED FROM STRUCTURE. PROVIDE FRAMING AS REQUIRED.
2. CONNECT TO EXISTING HWS AND HWR LINES AND EXTEND TO RELOCATED FAN COIL UNIT.
3. CONNECT TO EXISTING CHWS AND CHWR LINES AND EXTEND TO RELOCATED FAN COIL UNIT.
4. CONNECT TO EXISTING 14"x14" SUPPLY TRUNK AND EXTEND 14"x14" AS INDICATED.
5. RE-BALANCE EXISTING DIFFUSER TO CFM INDICATED.
6. RE-BALANCE EXISTING AHU-1 TO 12500 CFM SUPPLY AIR AND 4950 CFM OUTSIDE AIR. SEE DETAIL 12/M4.1.
7. RE-BALANCE EXISTING AHU-2 TO 2600 CFM SUPPLY AIR AND 500 CFM OUTSIDE AIR. SEE DETAIL 12/M4.1.
8. CONNECT NEW DIFFUSER AND RUNOUT DUCT TO EXISTING TAKE-OFF. MAXIMUM FLEX DUCT LENGTH IS 5 FEET.
9. CONNECT NEW DIFFUSER TO EXISTING RUNOUT DUCT.
10. SEE PLAN 2/M1.2 THIS SHEET FOR WORK ON MEZZANINE ABOVE THIS AREA.
11. NEW RG IN WALL ABOVE SALES FLOOR CEILING.
12. NEW 30x16 RETURN DUCT BACK TO EXISTING AHU-3.
13. CONNECT TO EXISTING RETURN DUCT AT EXISTING RAF-3.
14. 1/4" CONDENSATE PUMP DISCHARGE ABOVE CEILING.
15. DROP 1/4" CONDENSATE PUMP DISCHARGE DOWN INSIDE EXISTING STUD WALL.
16. ROUTE 1/4" CONDENSATE PUMP DISCHARGE IN EXISTING WALL ITO INDIRECT WASTE AT NEW HUB DRAIN IN CUPBOARD BELOW KITCHEN SINK.
17. MOUNT FCU-1 ON WALL WITH TOP OF UNIT 6" BELOW CEILING. MOUNT HARDWIRED REMOTE CONTROLLER IN SUITABLE, ACCESSIBLE LOCATION ON WALL AND CONNECT CONTROL WIRING AS REQUIRED.
18. EXTEND 5/8" OD RG AND 3/8" OD RL UP TO CU-1 ON ROOF.
19. INSTALL NEW TEMPERATURE SENSOR COMPATIBLE WITH EXISTING HONEYWELL DDC CONTROLS. EXTEND CONTROL WIRING TO EXISTING HONEYWELL DDC CONTROLLER IN AHU-1 MECHANICAL ROOM.
20. RAISE EXISTING 22x16 SUPPLY DUCT AS REQUIRED TO ACCOMMODATE NEW 12'-0" CEILING IN THIS AREA.
21. INSTALL NEW WALL-MOUNTED CONVECTOR WITH BOTTOM OF CABINET @ 5'6" A.F.F.
22. 3/4"HWS & 3/4"HWR DOWN IN STUD WALL TO CNV-1.
23. PROVIDE AND INSTALL 'DANFOSS' RA-2000 TAMPER-RESISTANT SELF-CONTAINED RADIATOR CONTROL VALVE IN CONVECTOR END-POCKET. EXTEND DIAL OPERATOR THRU CONVECTOR FRONT ENCLOSURE.

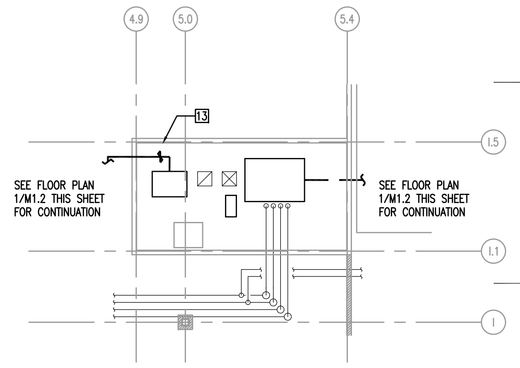

2 M1.2 MEZZANINE MECHANICAL PLAN
SCALE: 1/8" = 1'-0"

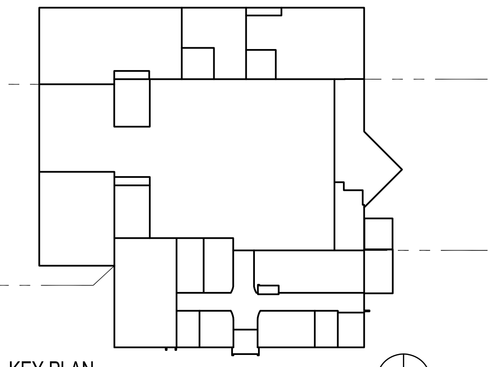

KEY PLAN
SCALE: N.T.S.

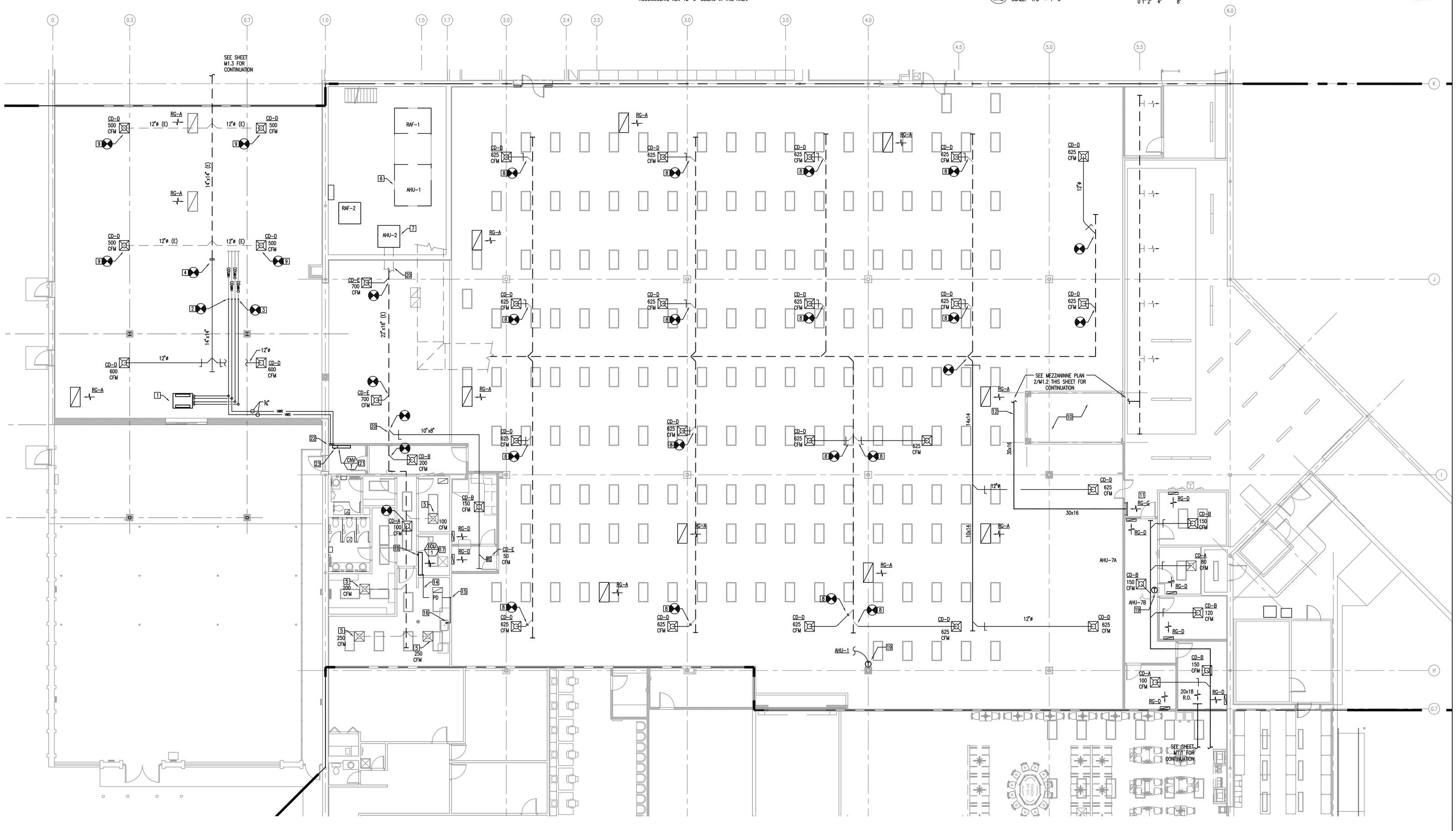

1 M1.2 ENLARGED RETAIL SALES AREA MECHANICAL PLAN
SCALE: 1/8" = 1'-0"

DATES AND REVISIONS

No.	Date/Description
	04.11.12 – BID

EXCHANGE™

RICHARD L. BOWEN + ASSOCIATES INC.
13000 Shaker Boulevard / Cleveland, Ohio 44120
Phone: (216) 491-5900 Fax: (216) 491-5053
www.rlba.com - email@rlba.com

FT. MYER EXCHANGE
JBMHH - MYER
ARLINGTON, VIRGINIA

MECHANICAL PLAN (2 OF 3)

DRAWN BY: KAF
CHECKED BY: KAF
RLB NO.: 7800.02

DRAWING NO. M1.2

P:\7800\7800.02 FT. MYER PX IMAGE UPGRADE CONST. CONTRACT DOCS\MECH\780002_M01-02.DWG | PLOTTED 04.09.2012 09:16AM BY MIKHAIL ALEKSEREV

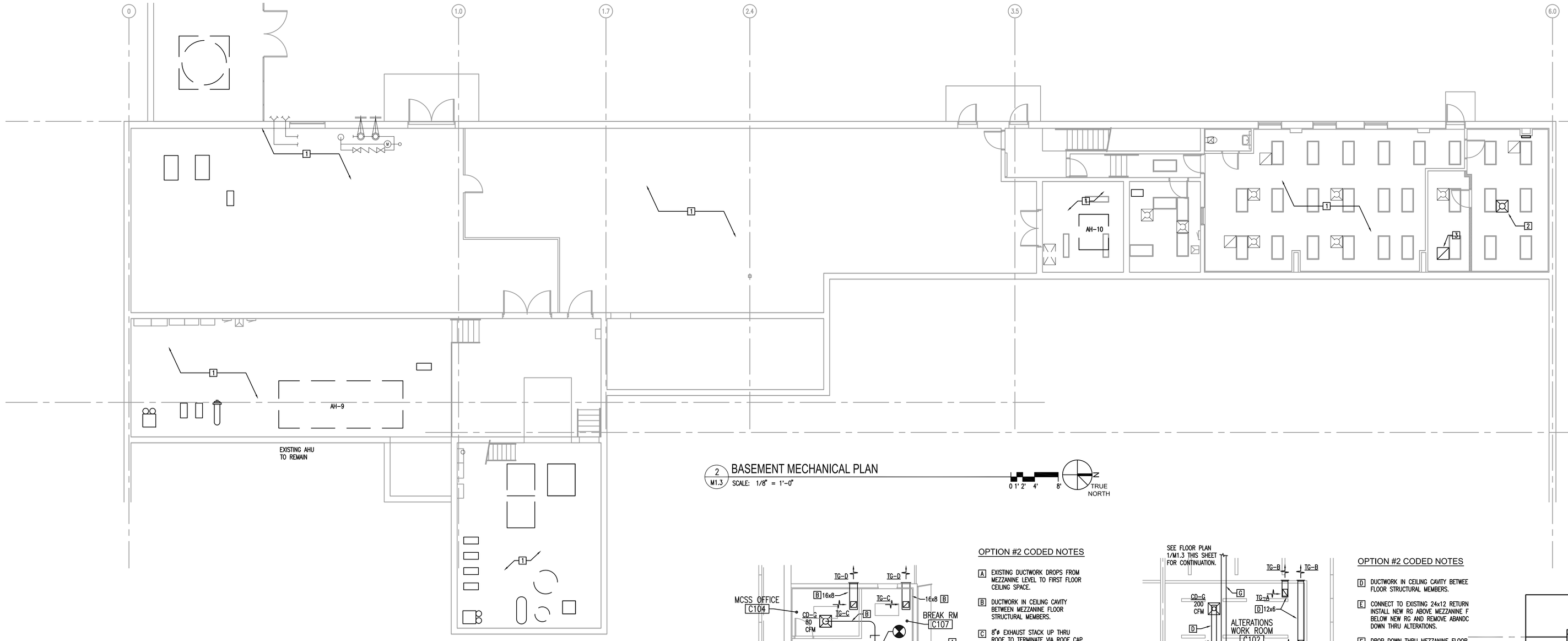

2 / M1.3 BASEMENT MECHANICAL PLAN

SCALE: 1/8" = 1'-0"

0 1' 2' 4' 8'

TRUE NORTH

CODED NOTES - BASEMENT PLAN

1. NO WORK IN THIS AREA.
2. INSTALL RE-LOCATED DIFFUSER SALVAGED FROM ADJACENT ROOM (SEE DWG. M01.3). EXTEND RUNOUT DUCT AS REQUIRED. MAXIMUM 5 FEET FLEX DUCT.
3. INSTALL RE-LOCATED RETURN GRILLE SALVAGED FROM ADJACENT ROOM (SEE DWG. M01.3).

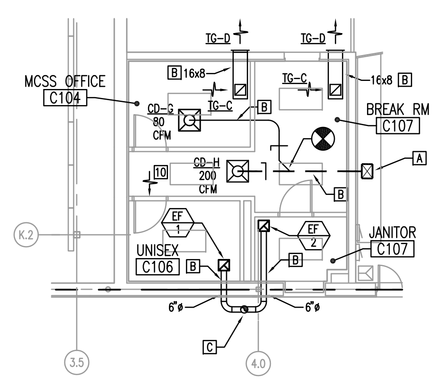

2 / M1.3 OPTION #2-A MECHANICAL PLAN

SCALE: 1/8" = 1'-0"

OPTION #2 CODED NOTES

- A EXISTING DUCTWORK DROPS FROM MEZZANINE LEVEL TO FIRST FLOOR CEILING SPACE.
- B DUCTWORK IN CEILING CAVITY BETWEEN MEZZANINE FLOOR STRUCTURAL MEMBERS.
- C 6"ø EXHAUST STACK UP THRU ROOF TO TERMINATE VIA ROOF CAP.

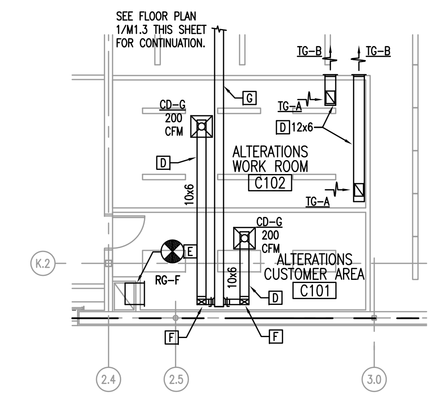

3 / M1.3 OPTION #2-B MECHANICAL PLAN

SCALE: 1/8" = 1'-0"

OPTION #2 CODED NOTES

- D DUCTWORK IN CEILING CAVITY BETWEE FLOOR STRUCTURAL MEMBERS.
- E CONNECT TO EXISTING 24x12 RETURN INSTALL NEW RG ABOVE MEZZANINE F BELOW NEW RG AND REMOVE ABANDC DOWN THRU ALTERATIONS.
- F DROP DOWN THRU MEZZANINE FLOOR ALTERATIONS CEILING SPACE.
- G DUCTWORK ABOVE MEZZANINE TIGHT T STRUCTURE.

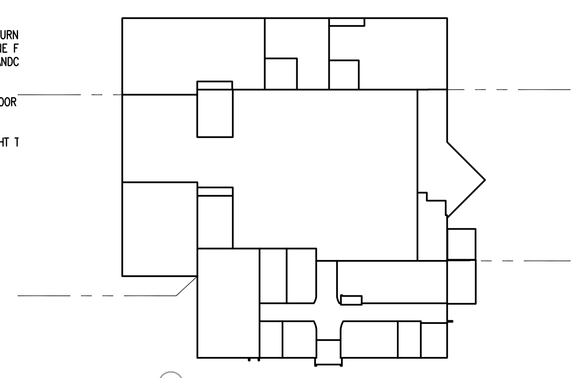

KEY PLAN

SCALE: N.T.S.

TRUE NORTH

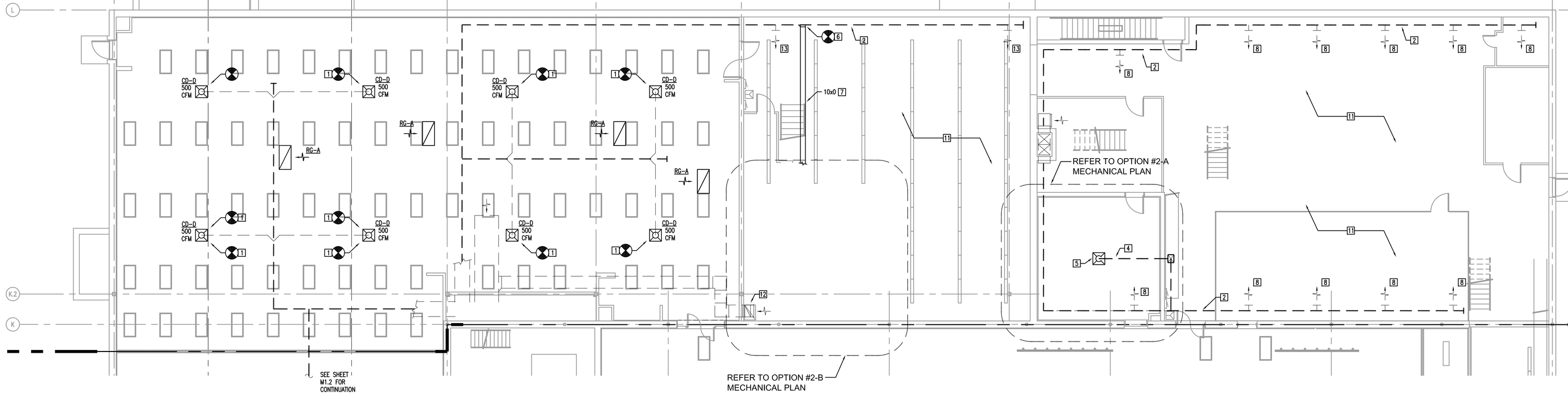

1 / M1.3 ENLARGED MCSS & MPA MECHANICAL PLAN

SCALE: 1/8" = 1'-0"

0 1' 2' 4' 8'

TRUE NORTH

CODED NOTES - FLOOR PLAN

1. CONNECT NEW DIFFUSER TO EXISTING RUNOUT DUCT AND BALANCE TO INDICATED CFM.
2. EXISTING DUCTWORK ON MEZZANINE LEVEL AT BOTTOM OF STRUCTURE.
3. EXISTING DUCTWORK DROPS FROM MEZZANINE LEVEL TO FIRST FLOOR CEILING SPACE.
4. DUCTWORK IN CEILING CAVITY BETWEEN MEZZANINE FLOOR STRUCTURAL MEMBERS.
5. EXISTING DIFFUSER TO REMAIN.
6. CONNECT TO TOP OF EXISTING 16x16 SUPPLY DUCT AND ROUTE AS HIGH AS POSSIBLE IN JOIST SPACE (OPTION #2 ONLY).
7. NEW DUCTWORK ON MEZZANINE LEVEL AS HIGH AS POSSIBLE IN JOIST SPACE (OPTION #2 ONLY).
8. EXISTING SUPPLY REGISTER ON MEZZANINE TO REMAIN.
9. RE-BALANCE EXISTING OUTLET AS INDICATED.
10. UNDERCUT DOOR BY 1" FOR AIR TRANSFER, BY GC.
11. NO WORK IN THIS AREA.
12. EXISTING RA DROP TO RA GRILLE LOW TO REMAIN IN BASE BID.

GENERAL NOTES:

1. DUCT SIZES INDICATED ARE CLEAR INSIDE DIMENSIONS. MAKE ALLOWANCE FOR LINING WHERE REQUIRED.
2. RUNOUT DUCTS ARE SAME SIZE AS CONNECTED DIFFUSER UNLESS INDICATED OTHERWISE.

DATES AND REVISIONS

No.	Date/Description
	04.11.12 – BID

EXCHANGE™

RICHARD L. BOWEN + ASSOCIATES INC.
ARCHITECTS • ENGINEERS • MANAGERS • CONSTRUCTION
13000 Shaker Boulevard / Cleveland, Ohio 44120
Phone: (216) 491-5000 Fax: (216) 491-8053
www.rlba.com - email@rlba.com

FT. MYER EXCHANGE

JBMHH - MYER
ARLINGTON, VIRGINIA

MECHANICAL PLAN (3 OF 3)

DRAWN BY: KAF

CHECKED BY: KAF

RLB NO.: 7800.02

DRAWING NO. M1.3

P:\7800\7800.02 FT. MYER PX IMAGE UPGRADE CONST. CONTRACT DOCS\MECH\780002_M01-03.DWG | PLOTTED 04.09.2012 09:16AM BY MIKHAIL ALENSEREV

DATES AND REVISIONS		
No.	Date/Description	
	04.11.12 – BID	

EXCHANGE™

RICHARD L. BOWEN
+ ASSOCIATES INC.
13000 Shaker Boulevard / Cleveland, Ohio 44120
Phone: (216) 491-9300 Fax: (216) 491-8053
www.rlba.com - email@rlba.com

FT. MYER EXCHANGE
JBMHH - MYER
ARLINGTON, VIRGINIA

ROOF PLAN - HVAC

DRAWN BY: KAF
CHECKED BY: KAF
RLB NO.: 7800.02
DRAWING NO. M2.0

1 M2.0 ROOF PLAN
SCALE: 3/32" = 1'-0"

CODED NOTES

1. 5/8" OD RG & 3/8" OD RL DOWN THROUGH ROOF VIA PIPE PORTAL.
2. INSTALL CONDENSING UNIT ON EQUIPMENT SUPPORTS ON ROOF. SEE DETAIL 8/M4.1.
3. INSTALL EF-3 ON NEW ROOF CURB AT LOCATION OF REMOVED EXHAUST FAN. REFER TO DWG. M02.0.
4. INSTALL EXHAUST FAN ON NEW ROOF CURB.
5. 1/2" OD RG & 1/4" OD RL DOWN THROUGH ROOF VIA PIPE PORTAL.

GENERAL NOTES

1. DO NOT INSTALL ANY MECHANICAL EQUIPMENT CLOSER THAN 10 FEET FROM THE EDGE OF THE ROOF.

VENTILATION SCHEDULES

AHU-1 Ventilation Calculation

AAFES Exchange/Fort Myer - Arlington, VA

System	Space	Room No.	Designation	A(z)	P(z)	R(a)	R(p)	V(bz)	R(p)P(z)	R(a)A(z)	E(z)	V(oz)	V(pz)	Z(p)
AHU-1	Exchange Retail Sales	B100	Retail	17005	255	0.12	7.5	3953	1913	2041	0.8	4941	12500	0.40

AHU-1 Minium OA Provided: 4950 CFM

AHU-2 Ventilation Calculation

AAFES Exchange/Fort Myer - Arlington, VA

System	Space	Room No.	Designation	A(z)	P(z)	R(a)	R(p)	V(bz)	R(p)P(z)	R(a)A(z)	E(z)	V(oz)	V(pz)	Z(p)
AHU-2	Exchange Retail Sales	B100	Retail	926	14	0.12	7.5	216	105	111	0.8	270	1400	0.19
AHU-2	Employee Hall	B112a	Corridor	193	0	0.06	0	12	0	12	0.8	14	200	0.07
AHU-2	Womens Locker	B116	Locker Room	175	0	0	0	0	0	0	0.8	0	200	0.00
AHU-2	Break Room	B117	Break Room	344	9	0.06	5	66	45	21	0.8	82	500	0.16
AHU-2	Equipment Room	B118	Telephone Closet	54	0	0	0	0	0	0	0.8	0	0	0.00
AHU-2	RPOS Office	B119	Office	73	1	0.06	5	9	5	4	0.8	12	100	0.12
AHU-2	Cash Room	B120	Office	131	2	0.06	5	18	10	8	0.8	22	150	0.15
AHU-2	Drop Room	B121	Office	46	1	0.06	5	8	5	3	0.8	10	50	0.19

Maximum Primary Outdoor Air Fraction Z(p)max	0.19
System Ventilation Efficiency E(v)	0.96
System Population P(s)	
ΣP(z)	27
Occupant Diversity (N/A)	1.00
V(ou) Uncorrected Outside Air Volume	328
ΣP(pz) Total Primary Airflow	2,600
V(ot) Corrected Outside Air Volume	342

Vestibule B112b is naturally ventilated by 3x7 door.

AHU-2 Minimum OA Provided: 500 CFM

AHU-5 Ventilation Calculation

AAFES Exchange/Fort Myer - Arlington, VA

System	Space	Room No.	Designation	A(z)	P(z)	R(a)	R(p)	V(bz)	R(p)P(z)	R(a)A(z)	E(z)	V(oz)	V(pz)	Z(p)
AHU-5	GNC	A121	Retail	668	10	0.12	7.5	155	75	80	0.8	194	1000	0.19
AHU-5	GNC Stock	A122	Storage	169		0.12		20	0	20	0.8	25	180	0.14
AHU-5	Barber Shop	A123	Barber Shop	723	18	0.06	7.5	178	135	43	0.8	223	1050	0.21
AHU-5	Barber Shop Office	A124	Office	70	1	0.06	5	9	5	4	0.8	12	60	0.19

Maximum Primary Outdoor Air Fraction Z(p)max	0.21
System Ventilation Efficiency E(v)	0.94
System Population P(s)	
ΣP(z)	29
Occupant Diversity (N/A)	1.00
V(ou) Uncorrected Outside Air Volume	363
ΣP(pz) Total Primary Airflow	2,290
V(ot) Corrected Outside Air Volume	398

AHU-5 Minimum OA Provided: 400 CFM

AHU-6 Ventilation Calculation

AAFES Exchange/Fort Myer - Arlington, VA

System	Space	Room No.	Designation	A(z)	P(z)	R(a)	R(p)	V(bz)	R(p)P(z)	R(a)A(z)	E(z)	V(oz)	V(pz)	Z(p)
AHU-6	Mall	A101	Mall Common Area	2763	100	0.06	7.5	916	750	166	0.8	1145	2300	0.50
AHU-6	Optical	A102	Retail	292	4	0.12	7.5	65	30	35	0.8	81	400	0.20
AHU-6	Optical Lab	A103	Laboratory	113	1	0.18	10	30	10	20	0.8	38	200	0.19
AHU-6	Dunkin' Donuts	A104	Fast-food	313	6	0.18	7.5	101	45	56	0.8	127	500	0.25
AHU-6	Dunkin' Donuts Backroom	A105	Fast-food	297	4	0.18	7.5	83	30	53	0.8	104	500	0.21
AHU-6	Anthony's Pizza	A106	Fast-food	188	4	0.18	7.5	64	30	34	0.8	80	325	0.25
AHU-6	Charley's Subs	A108	Fast-food	220	4	0.18	7.5	70	30	40	0.8	87	300	0.29
AHU-6	Backroom	A110	Fast-food	514	6	0.18	7.5	138	45	93	0.8	172	800	0.21
AHU-6	Office	A111	Office	87	1	0.06	5	10	5	5	0.8	13	100	0.13
AHU-6	LP Office	A113	Office	135	1	0.06	5	13	5	8	0.8	16	150	0.11
AHU-6	LP Surveillance	A114	Office	145	1	0.06	5	14	5	9	0.8	17	275	0.06

Maximum Primary Outdoor Air Fraction Z(p)max	0.50
System Ventilation Efficiency E(v)	0.65
System Population P(s)	
ΣP(z)	132
Occupant Diversity (N/A)	1.00
V(ou) Uncorrected Outside Air Volume	588
ΣP(pz) Total Primary Airflow	5,850
V(ot) Corrected Outside Air Volume	905

AHU-6 Minimum OA Provided: 1000 CFM

AHU-7A Ventilation Calculation

AAFES Exchange/Fort Myer - Arlington, VA

System	Space	Room No.	Designation	A(z)	P(z)	R(a)	R(p)	V(bz)	R(p)P(z)	R(a)A(z)	E(z)	V(oz)	V(pz)	Z(p)
AHU-7A	Concessions	A119	Retail	650	10	0.12	7.5	153	75	78	0.8	191	750	0.26
AHU-7A	Food Court	A119	Dining	1684	50	0.18	7.5	678	375	303	0.8	848	2250	0.38

Maximum Primary Outdoor Air Fraction Z(p)max	0.38
System Ventilation Efficiency E(v)	0.77
System Population P(s)	
ΣP(z)	60
Occupant Diversity (N/A)	1.00
V(ou) Uncorrected Outside Air Volume	678
ΣP(pz) Total Primary Airflow	3,000
V(ot) Corrected Outside Air Volume	881

AHU-7A Minimum OA Provided: 900 CFM

AHU-7B Ventilation Calculation

AAFES Exchange/Fort Myer - Arlington, VA

System	Space	Room No.	Designation	A(z)	P(z)	R(a)	R(p)	V(bz)	R(p)P(z)	R(a)A(z)	E(z)	V(oz)	V(pz)	Z(p)
AHU-7B	Food Stock	A118	Storage	620		0.12		74	0	74	0.8	93	700	0.13
AHU-7B	Hall	B101	Corridor	213	0	0.06		13	0	13	0.8	16	150	0.11
AHU-7B	Store Manager	B102	Office	142	1	0.06	5	14	5	9	0.8	17	150	0.11
AHU-7B	Stock Manager	B103	Office	78	1	0.06	5	10	5	5	0.8	12	80	0.15
AHU-7B	Dept. Manager 1	B104	Office	117	1	0.06	5	12	5	7	0.8	15	120	0.13
AHU-7B	Dept. Manager 2	B105	Office	93	1	0.06	5	11	5	6	0.8	13	100	0.13
AHU-7B	Operations Manager	B106	Office	139	1	0.06	5	13	5	8	0.8	17	150	0.11

Maximum Primary Outdoor Air Fraction Z(p)max	0.15
System Ventilation Efficiency E(v)	1.00
System Population P(s)	
ΣP(z)	5
Occupant Diversity (N/A)	1.00
V(ou) Uncorrected Outside Air Volume	146
ΣP(pz) Total Primary Airflow	1,450
V(ot) Corrected Outside Air Volume	146

AHU-7B Minimum OA Provided: 200 CFM

DUCTLESS SPLIT SYSTEM SCHEDULE - OUTDOOR UNIT

MARK	MANUF. MODEL NO.	REFRIGERANT	VOLTAGE	FAN FLA	COMPRESSOR RLA	COMPRESSOR LRA	POWER MCA	POWER MOCP	WEIGHT
CU 1	MITSUBISHI PUY-A24NHA	R-410A	208-230V/60/1ø	0.75	12	14	18	25A	163 LBS
CU 2	MITSUBISHI PUY-A18NHA3	R-410A	208-230V/60/1ø	0.35	12	14	13	20A	97 LBS

FAN SCHEDULE

MARK	DWG #	SERVICE	TYPE	MANUFACTURER & MODEL NO.	CFM	S.P. (IN. W.C.)	MHP	RPM	VOLTAGE	REMARKS
EF 1	M1.3	TOILET EXHAUST	CEILING	GREENHECK SP-A125	100	0.25	53 WATT	1100	115V/60/1	1,3
EF 2	M1.3	JANITOR'S CLOSET EXHAUST	CEILING	GREENHECK SP-A125	100	0.25	53 WATT	1100	115V/60/1	2,3
EF 3	M2.0	ANTHONY'S PIZZA HOOD EXHAUST	UPBLAST P.R.V.	GREENHECK CUBE-101-4	900	0.50	1/4	1392	115V/60/1	4,5,6,7,8,9,10,11
EF 4	M2.0	CHARLEY'S SUBS HOOD EXHAUST	UPBLAST P.R.V.	GREENHECK CUBE-180HP-10	2410	1.00	1	1042	208V/60/1	4,5,6,7,9,10,11,12
EF 5	M2.0	OPTICAL LAB TINTING HOOD	DOWNBLAST P.R.V.	GREENHECK G-080-D	300	0.375	1/20	1550	115V/60/1	3,4,5,8,9,13

SEE REMARKS:

1. INTERLOCK FAN WITH LOCAL LIGHT SWITCH
2. CONTINUOUS OPERATION
3. INTEGRAL BACKDRAFT DAMPER
4. MANUAL SWITCH CONTROL.
5. ROOF CURB
6. VENTED CURB EXTENSION)AS REQUIRED)
7. GREASE TRAP
8. DISCONNECT SWITCH
9. BIRDSCREEN
10. UL CLASS 762
11. HINGED CURB CAP
12. NEMA 3R DISCONNECT SWITCH
13. SPEED CONTROLLER

HOT WATER CONVECTOR SCHEDULE

MARK	TYPE	MANUFACTURER & MODEL NO.	SIZE (LxHxD)	CAPACITY MBH	EAT (°F)	AWT (°F)	GPM	WPD (FEET)	REMARKS
CNV 1	WALL-HUNG	TRANE TYPE "W"	32"x26"x6"	5.9	50	170	0.6	0.1	1,2

SEE REMARKS:

1. COLOR SELECTED BY ARCHITECT.
2. PROVIDE WITH 12" END POCKET AND ACCESS DOOR.

CONSTANT AIR VOLUME REHEAT TERMINAL UNIT SCHEDULE

MARK	MANUFACTURER	MODEL	INLET SIZE	CFM	HW REHEAT COIL CFM	EAT	LAT	EWT	GPM	WPD (FT.)	MBH	ROWS	MAX. A.P.D. IN. W.C.	OPERATING WEIGHT (LBS)	REMARKS
CV 1	TRANE	VCWF	6"ø	400	400	55	90	180	1.5	4.7	15.2	1	0.15	21	1.2.3.4.5,6
CV 2	TRANE	VCWF	5"ø	200	200	55	90	180	0.5	0.5	7.6	1	0.15	21	1.2.3.4,6
CV 3	TRANE	VCWF	10"ø	500	500	55	90	180	1.1	3.6	19.0	1	0.15	29	1.2.3.4,6
CV 4	TRANE	VCWF	10"ø	500	500	55	90	180	1.1	3.6	19.0	1	0.15	29	1.2.3.4,6
CV 5	TRANE	VCWF	8"ø	300	300	55	90	180	0.7	1.2	11.4	1	0.15	21	1.2.3.4,6
CV 6	TRANE	VCWF	10"ø	500	500	55	90	180	1.1	3.6	19.0	1	0.15	29	1.2.3.4,6
CV 7	TRANE	VCWF	10"ø	500	500	55	90	180	1.1	3.6	19.0	1	0.15	29	1.2.3.4,6
CV 8	TRANE	VCWF	8"ø	325	325	55	90	180	0.8	1.6	12.3	1	0.15	21	1.2.3.4,6
CV 9	TRANE	VCWF	12"ø	900	900	55	85	180	1.6	1.5	29.3	1	0.15	37	1.2.3.4.5,6
CV 10	TRANE	VCWF	10"ø	500	500	55	90	180	1.1	3.6	19.0	1	0.15	29	1.2.3.4,6
CV 11	TRANE	VCWF	8"ø	300	300	55	90	180	0.7	1.2	11.4	1	0.15	21	1.2.3.4,6
CV 12	TRANE	VCWF	10"ø	500	500	55	90	180	1.1	3.6	19.0	1	0.15	29	1.2.3.4,6
CV 13	TRANE	VCWF	5"ø	150	150	55	90	180	0.5	0.5	5.7	1	0.15	21	1.2.3.4,6
CV 14	TRANE	VCWF	8"ø	275	275	55	90	180	0.5	0.8	10.4	1	0.15	21	1.2.3.4.5,6

SEE REMARKS:

1. FACTORY DISCONNECT
2. CONTROL POWER TRANSFORMER
3. 1"MATTE-FACED INSULATION
4. UC400 BACnet DDC CONTROL (BASIC W/ MODULATING WATER HEAT), TO BE COMPATIBLE WITH EXISTING HONEYWELL DDC CONTROLS
5. 3-WAY CONTROL VALVE. (2-WAY CONTROL VALVE OTHERWISE.)
6. CONTRACTOR IS RESPONSIBLE FOR INSTALLING AND ROUTING HWS AND HWR PIPING AND VALVES.

AIR DISTRIBUTION SCHEDULE

TAG	MANUFACTURER	MODEL	NECK SIZE	CFM	NC LEVEL	DIFFUSER FACE	CEILING TYPE	REMARKS
CD-A	PRICE	SCD	6"ø	AS NOTED	30	24x24	LAY-IN	
CD-B	PRICE	SCD	8"ø	AS NOTED	30	24x24	LAY-IN	
CD-C	PRICE	SCD	10"ø	AS NOTED	30	24x24	LAY-IN	
CD-D	PRICE	SCD	12"ø	AS NOTED	30	24x24	LAY-IN	
CD-E	PRICE	SCD	14"ø	NOTED	30	24x24	LAY-IN	
CD-F	PRICE	SCD	5"ø	AS NOTED	30	12x12	LAY-IN	
CD-G	PRICE	SCD	6"ø	AS NOTED	30	24x24	PLASTER	
CD-H	PRICE	SCD	8"ø	AS NOTED	30	24x24	PLASTER	
CD-I	PRICE	SCD	10"ø	AS NOTED	30	24x24	PLASTER	
RG-A	PRICE	80	22x46	AS NOTED	30	24x48	LAY-IN	
RG-B	PRICE	80	22x22	AS NOTED	30	24x24	LAY-IN	
RG-C	PRICE	80	22x12	AS NOTED	30	24x14	LAY-IN	
RG-D	PRICE	80	22x6	AS NOTED	30	24x8	LAY-IN	
RG-E	PRICE	80	22x12	AS NOTED	30	24x14	PLASTER	
RG-F	PRICE	530	24x12	AS NOTED	30	26x14	SURFACE MOUNT	
RG-G	PRICE	530	30x18	AS NOTED	30	32x16	SURFACE MOUNT	
TG-A	PRICE	530	14x10	AS NOTED	30	16x12	SURFACE MOUNT	
TG-B	PRICE	530	12x6	AS NOTED	30	14x8	SURFACE MOUNT	
TG-C	PRICE	530	10x10	AS NOTED	30	12x12	SURFACE MOUNT	
TG-D	PRICE	530	16x8	AS NOTED	30	18x10	SURFACE MOUNT	

SEE REMARKS:

1. PLASTER MOUNTING FRAME
2. WITH INTEGRAL INSULATED PLENUM
3. WITH OPPOSED BLADE DAMPER

HOT WATER CABINET UNIT HEATER SCHEDULE

MARK	TYPE	MANUFACTURER & MODEL NO.	CFM	RPM	HP	CAPACITY MBH	EAT (°F)	EWT (°F)	COIL ROWS	GPM	WPD (FEET)	MCA	MOP	VOLTAGE	REMARKS
CUH 1	VERTICAL CABINET	TRANE FTB806	544	1048	0.22	37.6	60	180	2	2.0	5.0	3.88	15A	115V/60/1ø	1-10

SEE REMARKS:

1. VERTICAL CABINET
2. FRONT TOE SPACE INLET
3. TOP BAR GRILLE DISCHARGE
4. FREE DISCHARGE ECM MOTOR
5. 1" THROWAWAY MERV 8 FILTER
6. 3-WAY MODULATING CONTROL VALVE
7. TRACER ZN520 STANDALONE CONTROLLER
8. UNIT MOUNTED ZONE TEMPERATURE SENSOR
9. EXTENDED END POCKET WITH PIPING.
10. COLOR SELECTED BY ARCHITECT.

DUCTLESS SPLIT SYSTEM SCHEDULE - INDOOR UNIT

MARK	SERVING	MANUF. MODEL NO.	CFM (WET COIL) LOW	MEDIUM	HIGH	MIN O.A. CFM	FAN F.L.A.	COOLING CAPACITY MAXIMUM	MINIMUM	POWER VOLTAGE	MCA	SEER	REMARKS
FCU 1	IT ROOM	MITSUBISHI PKA-A24FA	480	–	635	–	0.43	24,000 BTUH	12,000 BTUH	208-230V/60/1ø	1.0	13.5	1,2,3,4,5
FCU 2	LP SURVEILLANCE	MITSUBISHI PKA-A18HA	290	335	380	–	0.33	18,000 BTUH	8,000 BTUH	208-230V/60/1ø	1.0	15.3	1,2,3,4,5

REMARKS:

1. COOLING CAPACITY BASED ON 80/67 EAT AT 95/75 CONDENSER AMBIENT
2. R-410A REFRIGERANT
3. HARD-WIRED UNIT CONTROLLER #PAR-21MAA.
4. INDOOR UNIT POWERED VIA OUTDOOR UNIT.
5. PROVIDE WITH CONDENSATE PUMP.

KITCHEN EXHAUST HOOD SCHEDULE

MARK	DWG #	KITCHEN EQPT. TAG DWG. EQ1.1 & EQ1.2	SERVICE	HOOD TYPE	MANUFACTURER & MODEL NO.	CFM	HOOD DIMENSIONS LENGTH	DEPTH	HEIGHT	NET FREE AREA SQUARE FEET	DISCHARGE DUCT FLANGE	REMARKS
KH 1	M1.1	AP06	ANTHONY'S PIZZA	I	CAPTIVE AIRE KVE	900	72"	48"	24"	24.0	9" x 9"	1,2,3,4,6
KH 2	M1.1		CHARLEY'S SUBS	I	HALTON ND-2	2410	132"	54"	24"	47.25	16" x 12"	1,2,3,4,5,6

SEE REMARKS:

1. PROVIDE HOODS WITH LIGHT FIXTURES 3'-0" O.C.
2. PROVIDE FLAME GUARD FILTERS
3. PROVIDE ANSUL MODEL R102 FIRE SUPPRESSION SYSTEM
4. BOTTOM OF HOOD SHALL BE MOUNTED AT ELEVATION INDICATED ON ARCH. DRAWINGS. CONTRACTOR SHALL PROVIDE STAINLESS STEEL ENCLOSURE PANELS AS REQUIRED.
5. PROVIDE K6XL CAPTURE JET FANS, 1.3 FLA @ 120V/1ø. BALANCE TO 100 CFM.
6. PROVIDE LIGHT AND FAN SWITCHES ON FACE OF HOOD.

DATES AND REVISIONS

No.	Date/Description
	04.11.12 – BID

EXCHANGE™

RICHARD L. BOWEN + ASSOCIATES INC.
13000 Shaker Boulevard / Cleveland, Ohio 44120
Phone: (216) 491-9300 Fax: (216) 491-9053
www.rlba.com - email@rlba.com

FT. MYER EXCHANGE
JBMHH - MYER
ARLINGTON, VIRGINIA

MECHANICAL SCHEDULES

DRAWN BY: KAF
CHECKED BY: KAF
RLB NO.: 7800.02

DRAWING NO. M3.1

P:\7800\7800.02 FT. MYER PX IMAGE UPGRADE CONST. CONTRACT DOCS\MECH\7800X02_M03-01.DWG | PLOTTED 04.09.2012 09:15AM BY MIKHAIL ALEKSEYEV

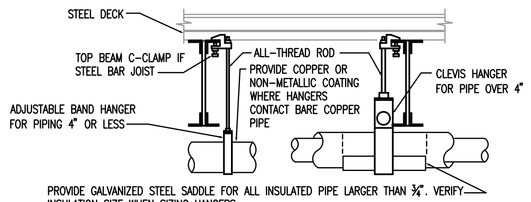

PROVIDE GALVANIZED STEEL SADDLE FOR ALL INSULATED PIPE LARGER THAN ¾". VERIFY INSULATION SIZE WHEN SIZING HANGERS

PROVIDE UPPER ATTACHMENT AS REQUIRED FOR CASES NOT SHOWN. DO NOT INSTALL HANGER INSIDE INSULATION OR OTHERWISE PENETRATE VAPOR BARRIER. DO NOT HANG ONE PIPE FROM ANOTHER. TRAPEZE HANGERS MAY BE USED FOR MULTIPLE PARALLEL PIPES. LOCATE HANGERS AS CLOSE AS POSSIBLE TO TURNS AND TEES OF PIPE. PROVIDE SUPPLEMENTARY STEEL STRUTS BETWEEN JOISTS IF REQUIRED. LOCATE HANGERS TO TAKE LOAD OFF OF EQUIPMENT CONNECTIONS. ANCHOR WATER PIPE AGAINST SWAYING DUE TO CHANGES IN WATER VELOCITY. PROVIDE SEISMIC BRACING IF/AS REQUIRED BY LOCAL AUTHORITIES. CHAINS OR PERFORATED STRAP IRON OR STEEL IS NOT ACCEPTABLE. REFER TO CODES FOR FURTHER INFORMATION.

HANGER SPACING FOR PIPE SIZE: COPPER: 4"=12' 3"=11' 2½"=10' 2"=9' 1½"=8' 1¼"=7' 1"=6' ¾"=6' ½"=5'. CAST IRON: 10' AND ONE NEAR ALL JOINTS. STEEL: 4"=14' 3"=12' 2½"=11' 2"=10' 1½"=9' 1"=7' ¾"=6' ½"=5'.

4 / M4.1 PIPE HANGER DETAIL
SCALE: NO SCALE

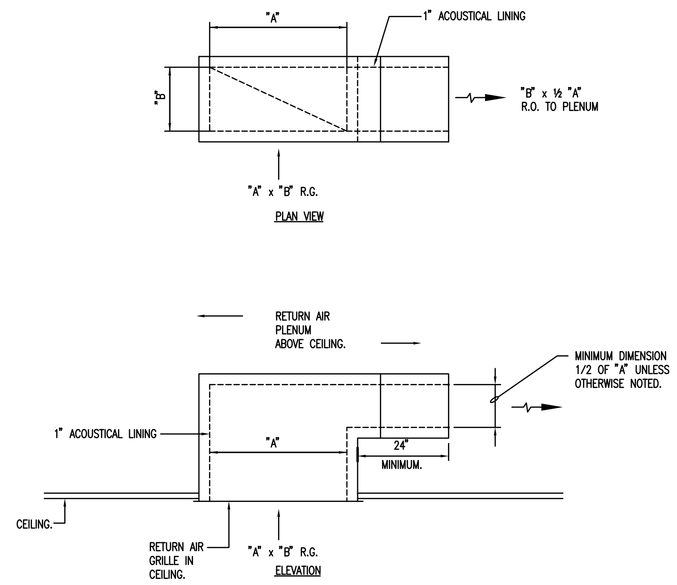

3 / M4.1 SOUND ATTENUATING RETURN AIR BOOT DETAIL
SCALE: NO SCALE

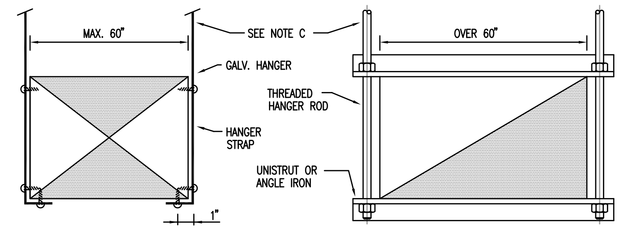

NOTES:
1. ON DUCTS OVER 48" WIDE, BOTTOM SHALL BE BRACED BY ANGLE. FOR CROSS SECTION AREA MORE THAN 8 SQ FT, DUCT SHALL BE BRACED BY ANGLES ON ALL FOUR SIDES.
2. CUTTING AND PATCHING SHALL BE LIMITED TO A MINIMUM AS REQUIRED FOR PROPER INSTALLATION.
3. DUCT SIZEXS THAT EXCEED A 2:1 RATIO OF WIDTH VERSES DEPTH SHALL BE REINFORCED PER SMACNA.
4. SUPPORTS SHALL BE SPACED AND SIZED AS PER SMACNA.

2 / M4.1 DUCT HANGER SUPPORT (RECTANGULAR)
SCALE: NO SCALE

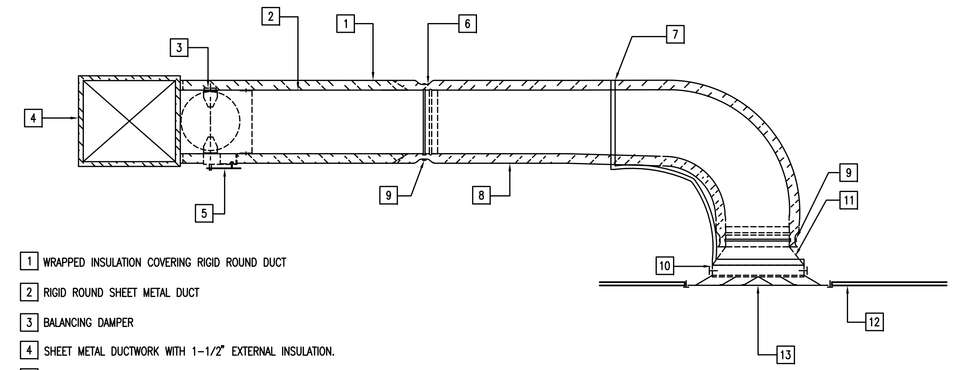

1. WRAPPED INSULATION COVERING RIGID ROUND DUCT
2. RIGID ROUND SHEET METAL DUCT
3. BALANCING DAMPER
4. SHEET METAL DUCTWORK WITH 1-1/2" EXTERNAL INSULATION.
5. BALANCING HANDLE. LOCK INTO POSITION AND MARK PERMANENTLY.
6. FLEXIBLE DUCT CONNECTION
7. FLEXIFLOW ELBOW BY THERMAFLEX OR SHEET METAL ELBOW.
8. INSULATED FLEXIBLE DUCT
9. METAL DRAWBAND
10. DIFFUSER STARTER COLLAR (MINIMUM 4").
11. SQUARE TO ROUND OR NECK REDUCER ADAPTER (IF REQUIRED)
12. CEILING
13. SUPPLY DIFFUSER WITH LAY-IN FRAME (SURFACE MOUNT FRAME SIMILAR)

NOTES:
1. PROVIDE AT FLEXIBLE DUCT CONNECTION METAL OR "PANDUIT" DRAWBAND ON THE INTERIOR FLEXIBLE DUCT HELIX. SECURE THE INSULATION OVER THE DRAWBAND WITH AN ADDITIONAL DRAWBAND.
2. PROVIDE MINIMUM 4" COLLARS FOR ATTACHMENT OF THE FLEXIBLE DUCT TO ROUND DUCT, DAMPERS AND DIFFUSERS.
3. PROVIDE METAL DRAWBAND TO RIGID ROUND DUCT INSULATION TO DUCT AND PROVIDE TAPE FOR INSULATION OVERLAP.

1 / M4.1 SUPPLY DIFFUSER CONNECTION DETAIL
SCALE: NONE

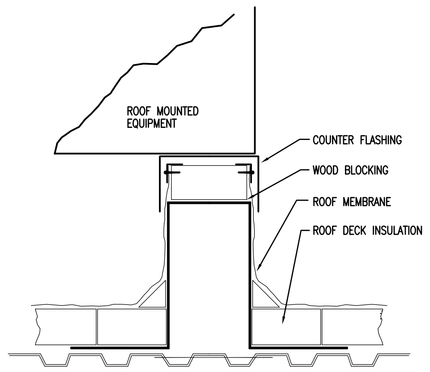

8 / M4.1 EQUIPMENT SUPPORT DETAIL
SCALE: NO SCALE

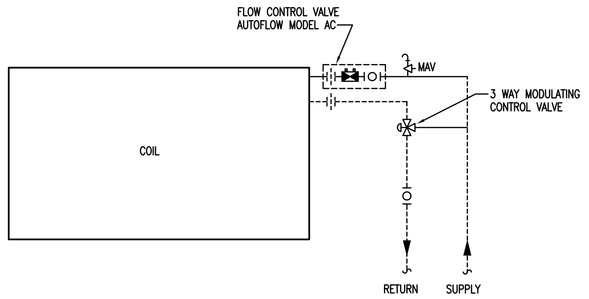

7 / M4.1 REHEAT COIL PIPING W/ 3 WAY VALVE
SCALE: NO SCALE

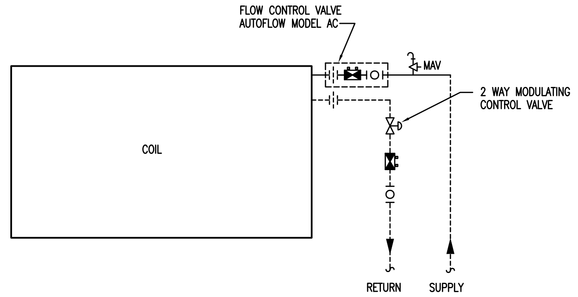

6 / M4.1 REHEAT COIL PIPING W/ 2 WAY VALVE
SCALE: NO SCALE

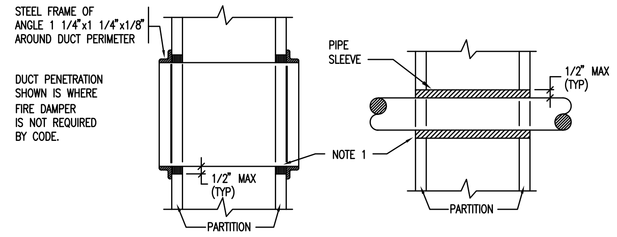

NOTES:
1. AT FIRE RATED PARTITIONS, ADD ADDITIONAL LAYER OF FIRE SAFING INSULATION AROUND PENETRATION SO AS TO FILL CAVITY.
2. DUCT AND PIPE PENETRATIONS THRU CORRIDOR WALLS ABOVE THE CEILING ARE TO BE FIRE STOPPED AROUND THE PENETRATION.

5 / M4.1 DUCT AND PIPE PENETRATIONS
SCALE: NO SCALE

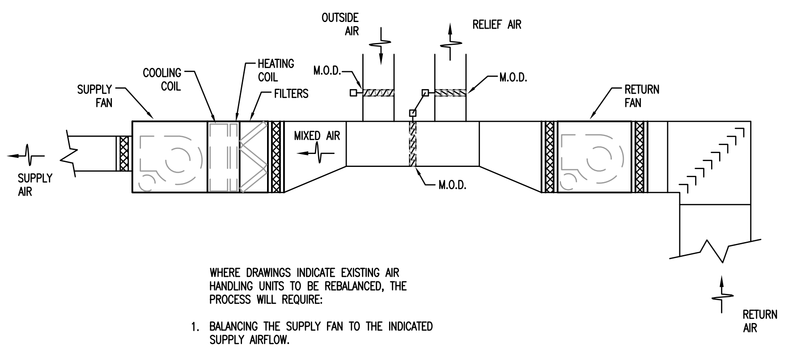

WHERE DRAWINGS INDICATE EXISTING AIR HANDLING UNITS TO BE REBALANCED, THE PROCESS WILL REQUIRE:

1. BALANCING THE SUPPLY FAN TO THE INDICATED SUPPLY AIRFLOW.
2. BALANCING THE ASSOCIATED RETURN FAN.
3. ADJUSTING THE MINIMUM OUTSIDE AIR TO THE INDICATED VOLUME, AND ADJUSTING THE CORRESPONDING RELIEF AIR AND RETURN AIR DAMPERS,

12 / M4.1 RE-BALANCE OF TYPICAL EXISTING AIR HANDLING UNIT
SCALE: NO SCALE

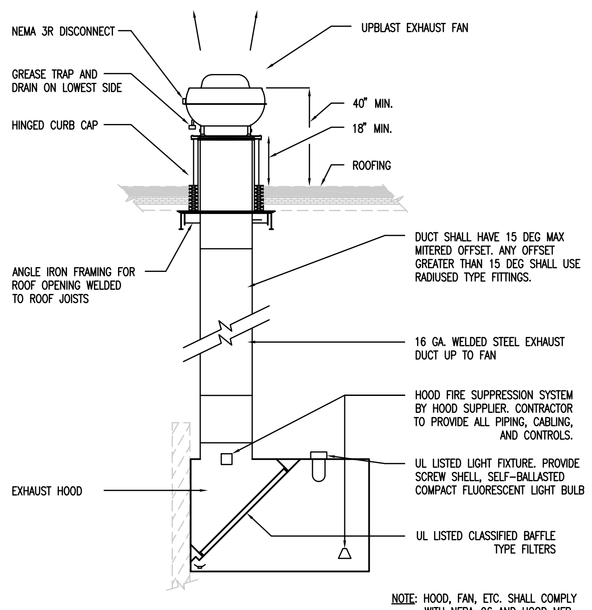

NOTE: HOOD, FAN, ETC. SHALL COMPLY WITH NFPA-96 AND HOOD MFR INSTRUCTIONS.

11 / M4.1 EXHAUST HOOD, DUCTWORK AND FAN DETAIL
SCALE: NO SCALE

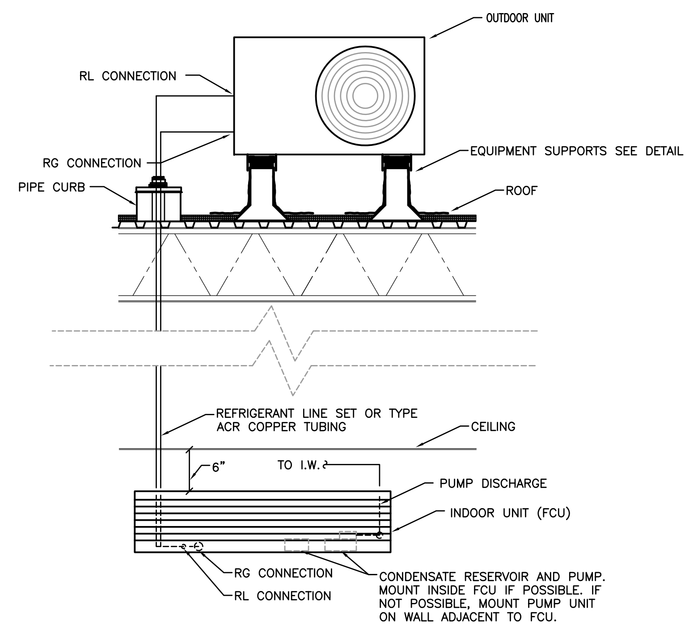

10 / M4.1 DUCTLESS SPLIT SYSTEM
SCALE: NO SCALE

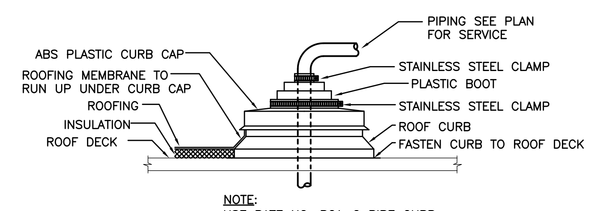

NOTE:
USE PATE NO. PCA-2 PIPE CURB ASSEMBLY FOR SINGLE-PLY ROOFING.
(MULTIPLE PIPE PENETRATIONS SIMILAR)

9 / M4.1 ROOF PIPE PENETRATION
SCALE: NO SCALE

DATES AND REVISIONS

No.	Date/Description
	04.11.12 - BID

EXCHANGE™

RICHARD L. BOWEN + ASSOCIATES INC.
ENGINEERS • ARCHITECTS • CONSTRUCTION MANAGERS
13000 Shaker Boulevard / Cleveland, Ohio 44120
Phone: (216) 491-9300 Fax: (216) 491-9303
www.rlba.com - email@rlba.com

FT. MYER EXCHANGE
JBMHH - MYER
ARLINGTON, VIRGINIA

MECHANICAL DETAILS

DRAWN BY: KAF
CHECKED BY: KAF
RLB NO.: 7800.02

DRAWING NO.
M4.1

P:\7800\7800.02 FT. MYER PX IMAGE UPGRADE CONST. CONTRACT DOCS\MECH\7800002_M04-01.DWG | PLOTTED 04.09.2012 09:15AM BY MIKHAIL ALEKSEYEV

DATES AND REVISIONS	
No.	Date/Description
	04.11.12 – BID

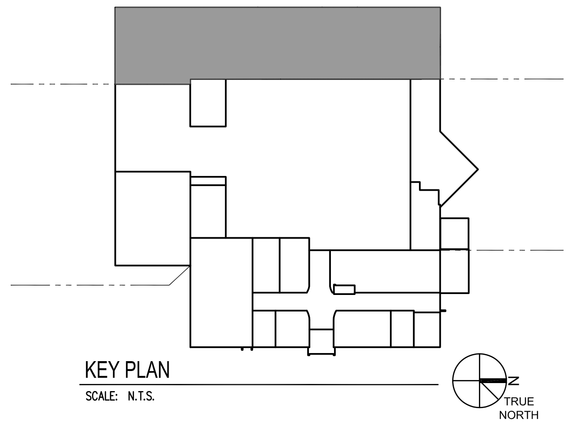

KEY PLAN

SCALE: N.T.S.

(X) PLAN NOTES:

1. UNLESS OTHERWISE NOTED, NO ELECTRICAL DEMOLITION IN THIS AREA/ROOM.
2. NOT USED.
3. REMOVE POWER POLE AND ASSOCIATED POWER/ COMMUNICATIONS CABLING TO FURNITURE SYSTEM.

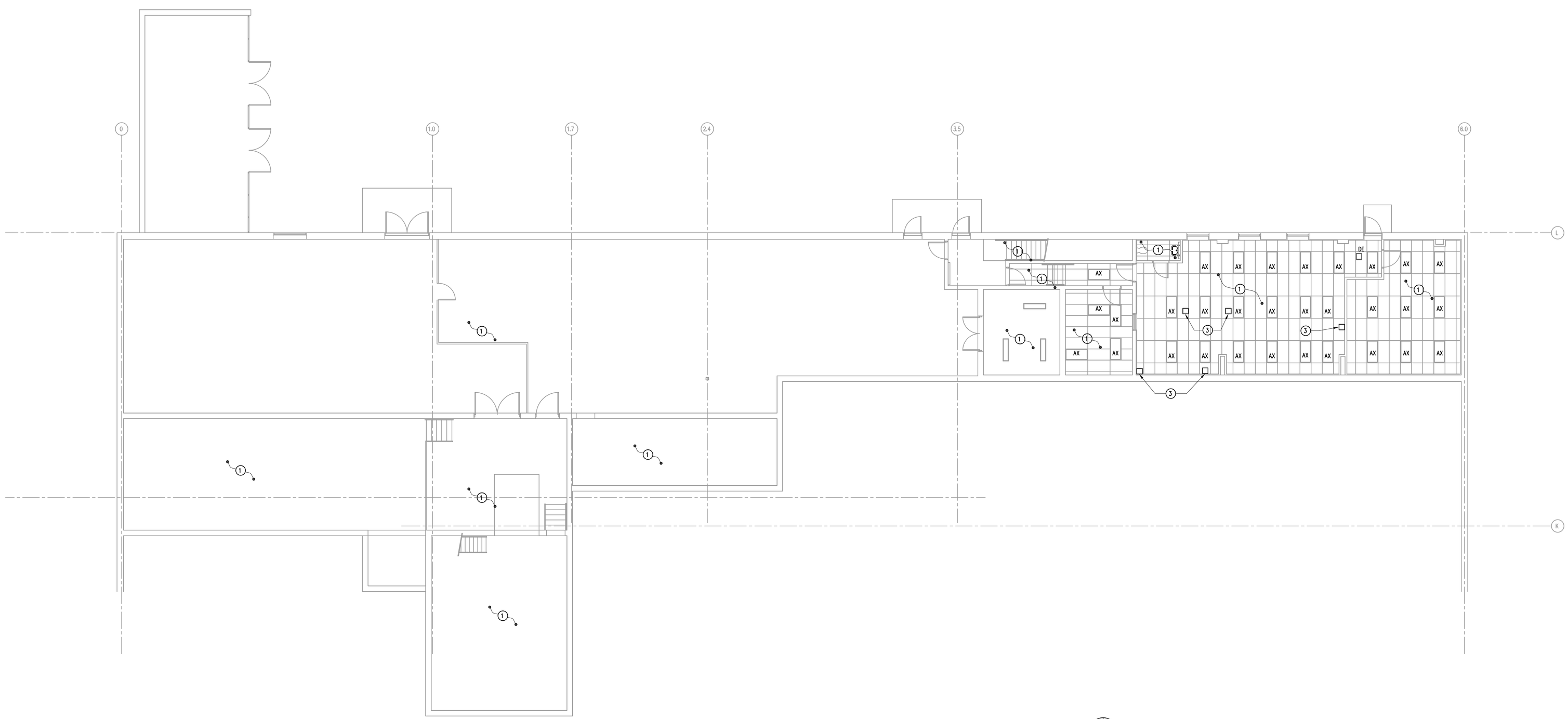

1 / ED1.0 BASEMENT ELECTRICAL LIGHTING & CEILING EQUIPMENT DEMOLITION PLAN

SCALE: 1/8" = 1'-0"

0 1' 2' 4' 8'

N TRUE NORTH

EXCHANGE™

RICHARD L. BOWEN + ASSOCIATES INC.

13000 Shaker Boulevard / Cleveland, Ohio 44120
Phone: (216) 491-9300 Fax: (216) 491-9053
www.rlba.com - email@rlba.com

FT. MYER EXCHANGE
JBMHH - MYER
ARLINGTON, VIRGINIA

BASEMENT ELECTRICAL LIGHTING & CEILING EQUIPMENT DEMOLITION PLAN

DRAWN BY: CAR

CHECKED BY: GSS

RLB NO.: 7800.02

DRAWING NO.

ED1.0

P:\7800\7800.02 FT. MYER PX IMAGE UPGRADE CONST. CONTRACT DOCS\ELEC\780002_ED01-00.DWG | PLOTTED 04.06.2012 10:58AM BY CASEY RODDS

GENERAL ELECTRICAL DEMOLITION NOTES:

(APPLIES TO ALL ED DRAWINGS)

1. THE CONTRACTOR SHALL REMOVE EXISTING WORK AS CALLED FOR ON THE DRAWINGS OR AS REQUIRED TO CLEAR AREAS FOR NEW CONSTRUCTION.
2. WHERE EXISTING EQUIPMENT IS TO BE RELOCATED, EXTREME CARE SHALL BE TAKEN TO PREVENT DAMAGE DURING THE REMOVAL AND REINSTALLATION. WHERE DAMAGE OCCURS, THE EQUIPMENT SHALL BE REPLACED OR REPAIRED TO THE SATISFACTION OF THE ARCHITECT, AT NO ADDITIONAL COST TO THE OWNER. ALL RELOCATED ITEMS SHALL BE THOROUGHLY CLEANED, RE-LAMPED AND IF REQUIRED, PAINTED BEFORE BEING INSTALLED AT THE NEW LOCATION.
3. ALL EQUIPMENT REMOVED THAT IS NOT BEING REUSED SHALL REMAIN THE PROPERTY OF THE OWNER AND SHALL BE STORED OR DISPOSED OF AS DIRECTED.
4. EXCEPT AS OTHERWISE NOTED, ALL EXISTING ELECTRICAL WORK WHICH WILL NOT BE RENDERED OBSOLETE AND WHICH MAY BE DISTURBED DUE TO ANY CHANGES REQUIRED UNDER THIS CONTRACT, SHALL BE RESTORED TO ITS ORIGINAL OPERATING CONDITION.
5. WHERE EXISTING ELECTRICAL WORK INTERFERES WITH NEW WORK AND WHERE SUCH INSTALLATIONS ARE TO REMAIN IN USE, THE INSTALLATION SHALL BE RELOCATED AND/OR RECONNECTED TO COORDINATE WITH THE WORK INDICATED ON THE CONTRACT DRAWINGS AND AS SPECIFIED.
6. WHERE EXISTING RACEWAYS THAT ARE NOT TO BE REUSED INTERFERE WITH NEW WORK, THESE RACEWAYS SHALL BE REMOVED BACK TO THE NEAREST JUNCTION BOX OR PULL BOX AND THE OPENINGS BLANKED. ANY OPENINGS THROUGH FIRE RATED WALLS OR ASSEMBLY SHALL BE FIRE PROOFED ACCORDINGLY
7. EXISTING RACEWAYS AND/OR WIRING MAY BE REUSED WHERE PRACTICAL. EXCEPT AS OTHERWISE INDICATED, PANEL BOARD CABINETS SHALL NOT BE USED FOR OTHER PURPOSES THAN CIRCUIT PROTECTION AND DISTRIBUTION POINTS AND SHALL NOT BE USED AS JUNCTION OR PULL BOXES.
8. ALL WORK SHALL BE PERFORMED IN SUCH A MANNER TO CREATE MINIMAL POWER OUTAGES FOR THE OWNER. ALL SUCH OUTAGES SHALL BE CAREFULLY COORDINATED WITH THE OWNER SO THAT POWER TO ESSENTIAL SERVICES CAN BE MAINTAINED. REFER TO ARCHITECTURAL PHASING PLAN.
9. CONTRACTOR SHALL MAINTAIN CONTINUITY OF BRANCH CIRCUITS SERVING MULTIPLE ITEMS OF WHICH ONE OR MORE ARE BEING DEMOLISHED. CONDUCTORS AND CONDUITS FOR THOSE ITEMS BEING DEMOLISHED SHALL BE REMOVED AS FAR AS HOMERUN JUNCTION BOX.
10. IT SHALL BE THE CONTRACTORS RESPONSIBILITY TO REMOVE ALL EXISTING ELECTRICAL EQUIPMENT NOT REUSED OR NOT NECESSARY FOR THE COMPLETION OF THIS PROJECT.
11. ALL EQUIPMENT INDICATED TO REMAIN IN PLACE SHALL REMAIN IN NORMAL OPERATION AT ALL TIMES DURING CONSTRUCTION. IF ANY BRANCH CIRCUIT WIRING FEEDING THIS EQUIPMENT IS DAMAGED DURING CONSTRUCTION, THE CONTRACTOR SHALL REPLACE WITH NEW BRANCH CIRCUIT WIRING OF THE SAME SIZE AND TYPE AS EXISTING AT NO COST TO THE OWNER.
12. EXISTING OUTLETS SHALL CONTINUE TO FUNCTION WITH NO INTERRUPTIONS IN SERVICE. THIS CONTRACTOR SHALL INSTALL ANY TEMPORARY LINES, CONNECTIONS, ETC. REQUIRED TO MAINTAIN THE ELECTRICAL SERVICE TO ESSENTIAL SERVICES.
13. LOCATION OF THE EXISTING ELECTRICAL SYSTEMS AND EQUIPMENT TO BE ALTERED, REMOVED, RELOCATED, RECONNECTED OR OTHERWISE WORKED ON HAVE BEEN TAKEN FROM PLANS OF THE EXISTING BUILDING, FIELD SURVEYS, AND OTHER RELIABLE SOURCES, AND ARE OFFERED AS GENERAL GUIDE ONLY, WITHOUT GUARANTEE AS TO COMPLETE ACCURACY. CONTRACTOR SHALL VISIT THE SITE AND THOROUGHLY INVESTIGATE THE WORK REQUIRED PRIOR TO BID.
14. ALL SECURITY DEVICES IE: CAMERAS SHALL BE DISCONNECTED AND STORED ON SITE AS DIRECTED BY STORE MANAGER.
15. EXISTING POWER POLES MAY BE REUSED AS NOTED AS LONG AS THE PHASING PLAN ALLOWS THEM TO BE REMOVED AND REINSTALLED. IF PHASING PLAN DOES NOT ALLOW THIS , EC SHALL PROVIDE NEW POWER POLES TO MATCH EXISTING. EC TO REPLACE ANY PLUGMOLD OR POWER POLES DAMAGED DURING RELOCATION WITH MATCHING EQUIPMENT.

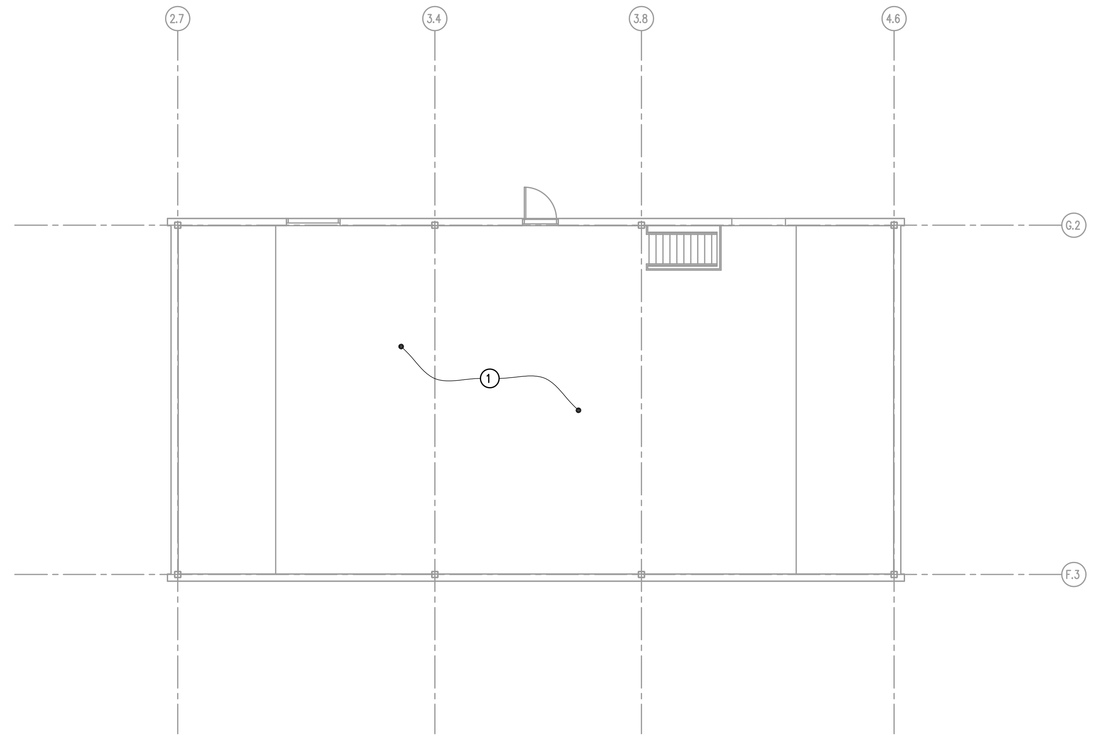

2 ED1.1 MECHANICAL PENTHOUSE ELECTRICAL LIGHTING DEMOLITION PLAN
SCALE: 1/8" = 1'-0"

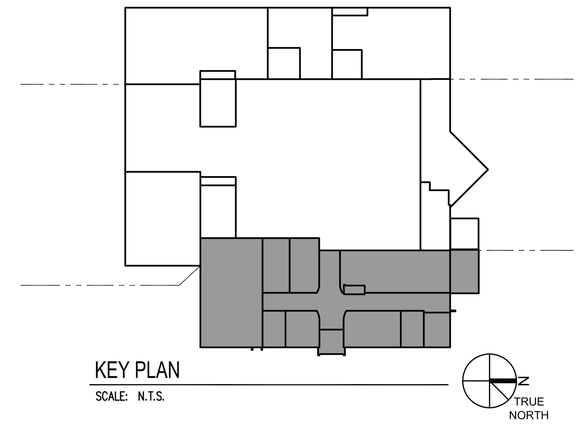

KEY PLAN
SCALE: N.T.S.

(X) PLAN NOTES:

1. UNO, NO ELECTRICAL DEMOLITION IN THIS AREA/ROOM.
2. NOT USED.
3. UNLESS OTHERWISE NOTED, DEMOLISH ALL ELECTRICAL EQUIPMENT, DEVICES, ETC AND ASSOCIATED CONDUIT/WIRING IN THIS SPACE/ROOM.
4. CELLULAR PHONE AMPLIFIER TO REMAIN. PROTECT/MAINTAIN ASSOCIATED CABLING.
5. SECURITY CAMERA TO BE REMOVED BY EXCHANGE.
6. DISCONNECT POWER TO EXISTING 'GNC' SIGN.
7. PAGING/MUSIC SPEAKER TO BE REMOVED BY EXCHANGE.
8. REMOVE ALL STRIP LIGHT FIXTURES MOUNTED ABOVE PERIMETER COVES IN THIS ROOM.
9. DISCONNECT EXHAUST FAN POWER (LOCATED ON ROOF) AND MAKE SAFE FOR REMOVAL BY MC. EC SHALL REMOVE WIRING AND CONDUIT COMPLETE TO SOURCE.

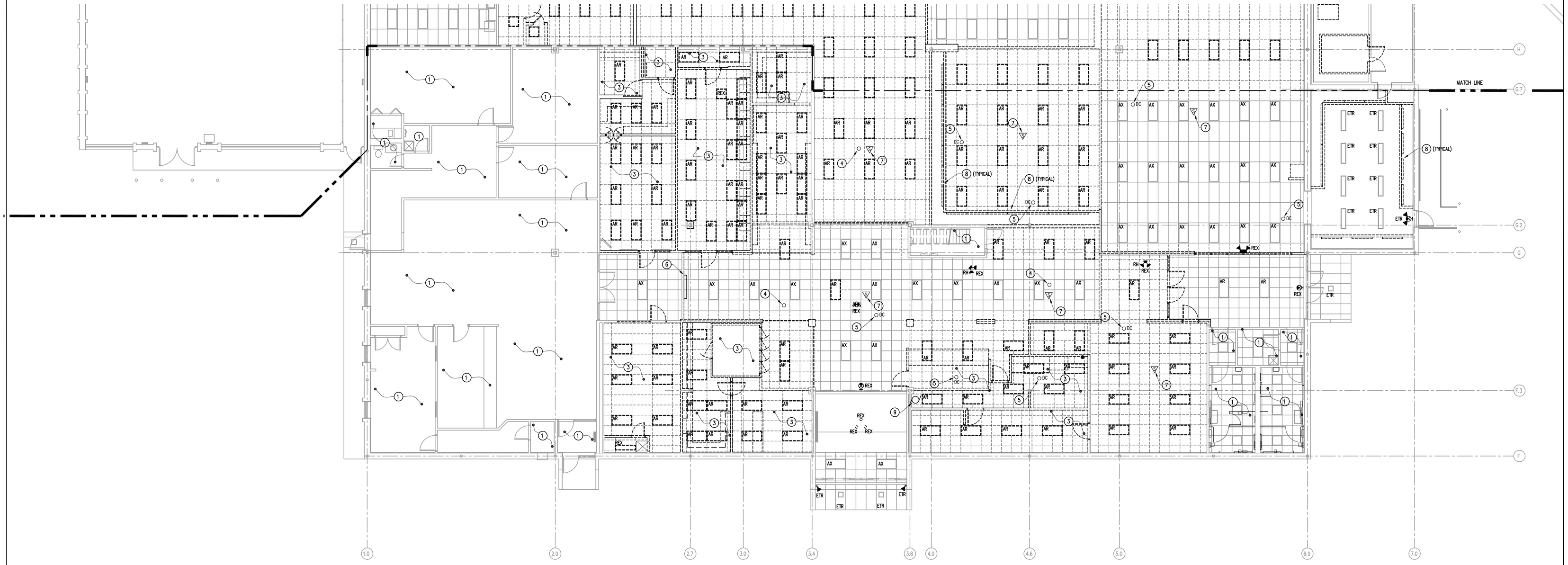

1 ED1.1 MALL & FOOD COURT ELECTRICAL LIGHTING/ CEILING EQUIPMENT DEMOLITION PLAN
SCALE: 1/8" = 1'-0"

DATES AND REVISIONS

No.	Date/Description
	04.11.12 – BID

EXCHANGE™

ARCHITECTS • ENGINEERS • CONSTRUCTION MANAGERS

RICHARD L. BOWEN + ASSOCIATES INC.
13000 Shaker Boulevard | Cleveland, Ohio 44120
Phone: (216) 491-5300 Fax: (216) 491-8053
www.rlba.com - email@rlba.com

FT. MYER EXCHANGE
JBMHH - MYER
ARLINGTON, VIRGINIA

ELECTRICAL LIGHTING AND CEILING EQUIPMENT DEMOLITION PLAN (AREA A)

DRAWN BY: CAR
CHECKED BY: GSS
RLB NO.: 7800.02

DRAWING NO.
ED1.1

P:\7800\7800.02 FT. MYER PX IMAGE UPGRADE CONST. CONTRACT DOCS\ELEC\780002_ED01-01.DWG | PLOTTED 04.06.2012 10:59AM BY CASEY RODDIS

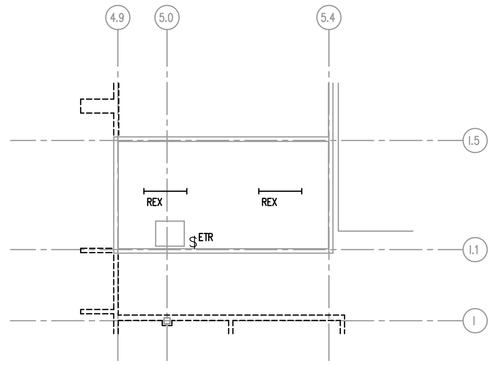

2 / ED1.2 MECHANICAL PENTHOUSE ELECTRICAL LIGHTING DEMOLITION PLAN
SCALE: 1/8" = 1'-0"

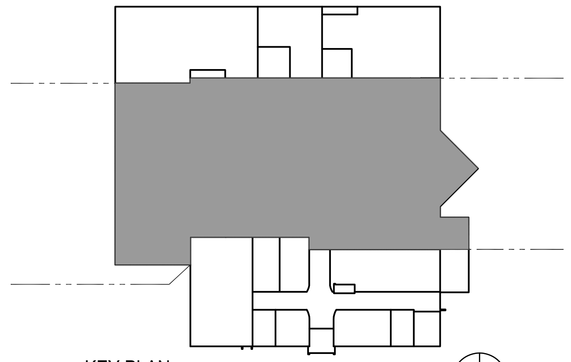

KEY PLAN
SCALE: N.T.S.

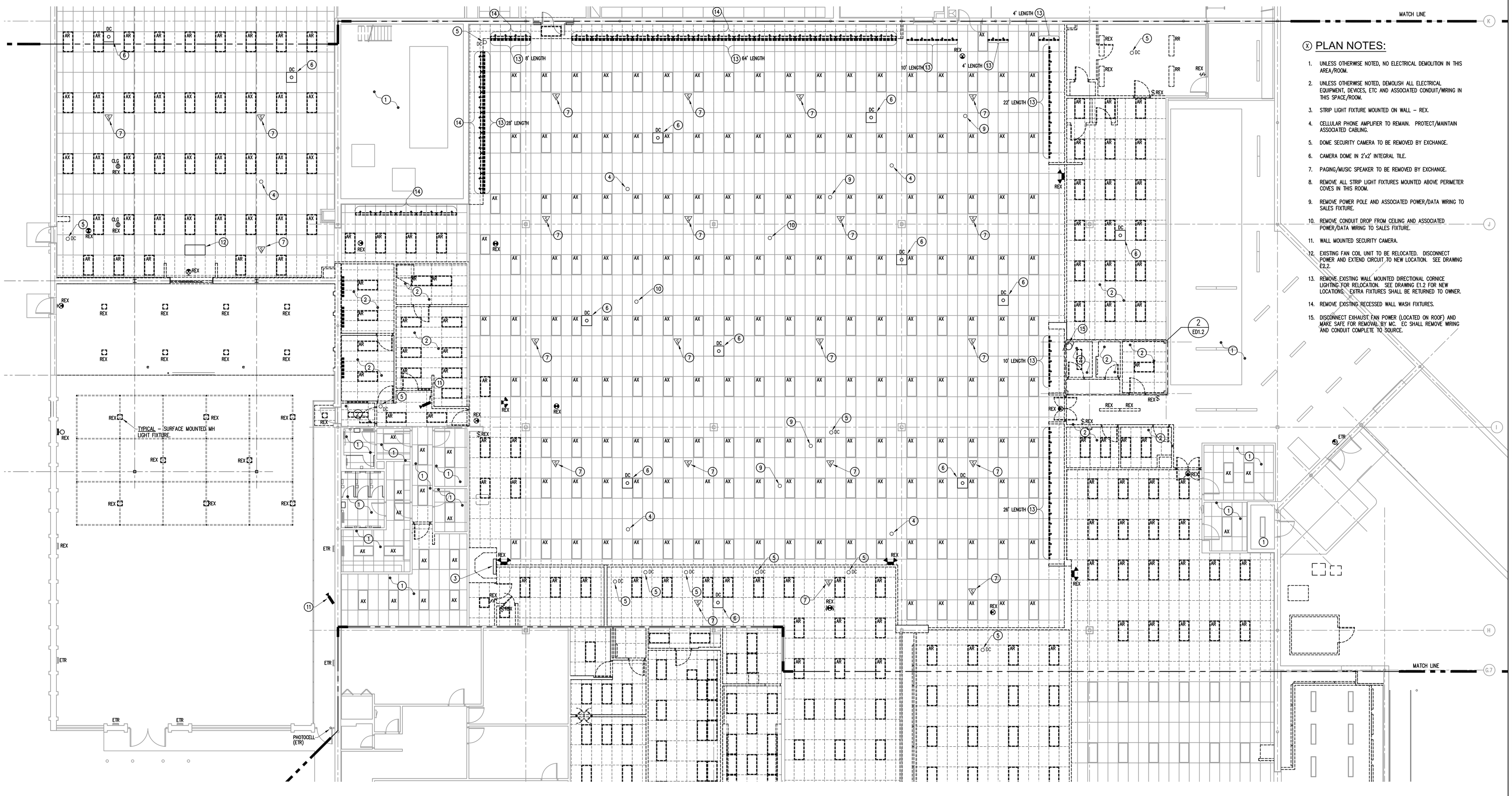

X PLAN NOTES:

1. UNLESS OTHERWISE NOTED, NO ELECTRICAL DEMOLITION IN THIS AREA/ROOM.
2. UNLESS OTHERWISE NOTED, DEMOLISH ALL ELECTRICAL EQUIPMENT, DEVICES, ETC AND ASSOCIATED CONDUIT/WIRING IN THIS SPACE/ROOM.
3. STRIP LIGHT FIXTURE MOUNTED ON WALL – REX.
4. CELLULAR PHONE AMPLIFIER TO REMAIN. PROTECT/MAINTAIN ASSOCIATED CABLING.
5. DOME SECURITY CAMERA TO BE REMOVED BY EXCHANGE.
6. CAMERA DOME IN 2'x2' INTEGRAL TILE.
7. PAGING/MUSIC SPEAKER TO BE REMOVED BY EXCHANGE.
8. REMOVE ALL STRIP LIGHT FIXTURES MOUNTED ABOVE PERIMETER COVES IN THIS ROOM.
9. REMOVE POWER POLE AND ASSOCIATED POWER/DATA WIRING TO SALES FIXTURE.
10. REMOVE CONDUIT DROP FROM CEILING AND ASSOCIATED POWER/DATA WIRING TO SALES FIXTURE.
11. WALL MOUNTED SECURITY CAMERA.
12. EXISTING FAN COIL UNIT TO BE RELOCATED. DISCONNECT POWER AND EXTEND CIRCUIT TO NEW LOCATION. SEE DRAWING E2.2.
13. REMOVE EXISTING WALL MOUNTED DIRECTIONAL CORNICE LIGHTING FOR RELOCATION. SEE DRAWING E1.2 FOR NEW LOCATIONS. EXTRA FIXTURES SHALL BE RETURNED TO OWNER.
14. REMOVE EXISTING RECESSED WALL WASH FIXTURES.
15. DISCONNECT EXHAUST FAN POWER (LOCATED ON ROOF) AND MAKE SAFE FOR REMOVAL BY MC. EC SHALL REMOVE WIRING AND CONDUIT COMPLETE TO SOURCE.

1 / ED1.2 RETAIL SALES AREA ELECTRICAL LIGHTING & CEILING EQUIPMENT DEMOLITION PLAN
SCALE: 1/8" = 1'-0"

DATES AND REVISIONS

No.	Date/Description
	04.11.12 – BID

EXCHANGE™

RICHARD L. BOWEN + ASSOCIATES INC.
13000 Shaker Boulevard / Cleveland, Ohio 44120
Phone: (216) 491-9300 Fax: (216) 491-8053
www.rlba.com - email@rlba.com

FT. MYER EXCHANGE
JBMHH - MYER
ARLINGTON, VIRGINIA

ELECTRICAL LIGHTING & CEILING EQUIPMENT DEMOLITION PLAN (AREA B)

DRAWN BY: CAR
CHECKED BY: GSS
RLB NO.: 7800.02

DRAWING NO.
ED1.2

P:\7800\7800.02 FT. MYER PX IMAGE UPGRADE CONST. CONTRACT DOCS\ELEC\7800002_ED01-02.DWG | PLOTTED 04.27.2012 08:11AM BY CASEY RODDIS

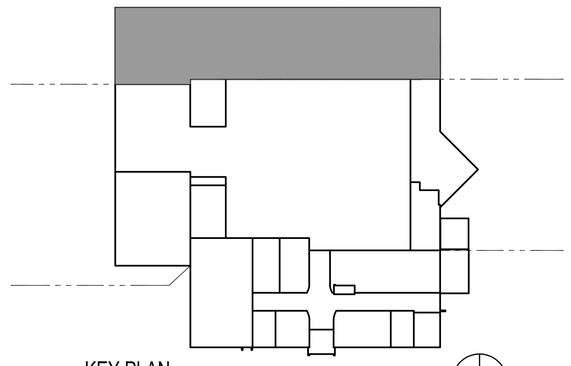

KEY PLAN

SCALE: N.T.S.

TRUE NORTH

ⓧ PLAN NOTES:

1. UNLESS OTHERWISE NOTED, NO ELECTRICAL DEMOLITION IN THIS AREA/ROOM.
2. UNLESS OTHERWISE NOTED, DEMOLISH ALL ELECTRICAL EQUIPMENT, DEVICES, ETC AND ASSOCIATED CONDUIT/WIRIG IN THIS SPACE/ROOM.
3. BASE BID: NO NEW WORK. OPTION #2: PERFORM ELECTRICAL WORK AS NOTED/SHOWN.
4. CELLUAR PHONE AMPLIFIER TO REMAIN. PROTECT/MAINTAIN ASSOCIATED CABLING
5. DOME SECURITY CAMERA TO BE REMOVED BY OWNER.
6. DOME SECURITY CAMERA IN 2'x2' INTEGRAL TILE TO BE REMOVED BY OWNER.
7. PAGING/MUSIC SPEAKER TO BE REMOVED BY OWNER.
8. REMOVE POWER POLE AND ASSOCIATED POWER/DATA CABLING SERVING FIXTURE/SHELVING.
9. REMOVE CONDUIT DROP FROM CEILING AND ASSOCIATED POWER/DATA CABLING SERVING FIXTURE/SHELVING.
10. BASE BID: EQUIPMENT SHALL REMAIN. OPTION 2: REPLACE EQUIPMENT WITH NEW – SEE DRAWING E6.0

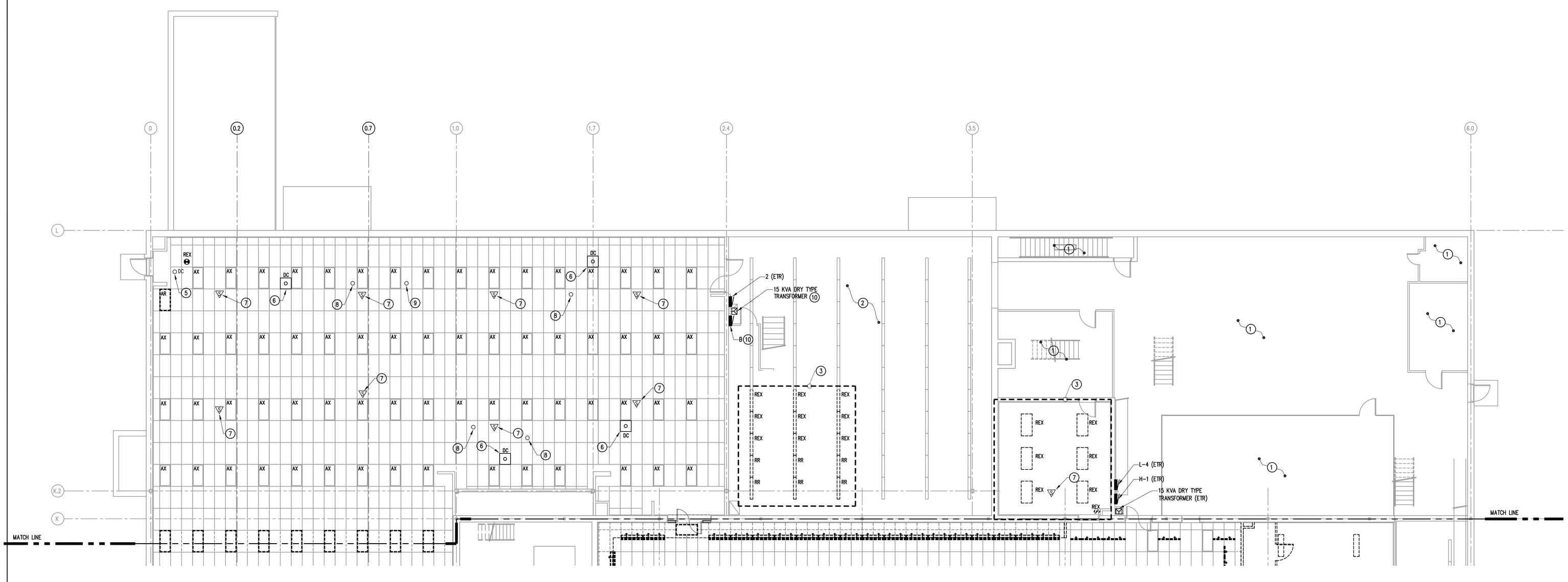

1 / ED1.3 MCSS & MPA ELECTRICAL LIGHTING & CEILING EQUIPMENTDEMOLITION PLAN

SCALE: 1/8" = 1'-0"

0 1' 2' 4' 8'

TRUE NORTH

DATES AND REVISIONS	
No.	Date/Description
	04.11.12 – BID

EXCHANGE™

RICHARD L. BOWEN + ASSOCIATES INC.

13000 Shaker Boulevard / Cleveland, Ohio 44120
Phone: (216) 491-5300 Fax: (216) 491-8053
www.rlba.com - email@rlba.com

FT. MYER EXCHANGE
JBMHH - MYER
ARLINGTON, VIRGINIA

ELECTRICAL LIGHTING & CEILING EQUIPMENT DEMOLITION PLAN (AREA C)

DRAWN BY: CAR

CHECKED BY: GSS

RLB NO.: 7800.02

DRAWING NO.

ED1.3

P:\7800\7800.02 FT. MYER PX IMAGE UPGRADE CONST. CONTRACT DOCS\ELEC\7800.02_ED01-03.DWG | PLOTTED 04.06.2012 11:00AM BY CASEY RODDIS

DATES AND REVISIONS	
No.	Date/Description
	04.11.12 – BID

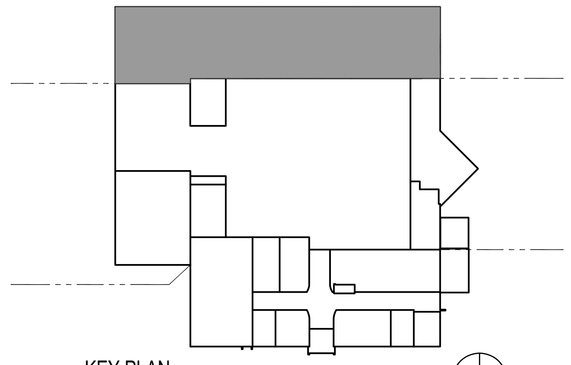

KEY PLAN

SCALE: N.T.S.

TRUE NORTH

ⓧ PLAN NOTES:

1. UNLESS OTHERWISE NOTED, NO ELECTRICAL DEMOLITION IN THIS AREA/ROOM.
2. UNLESS OTHERWISE NOTED, DEMOLISH ALL ELECTRICAL EQUIPMENT, DEVICES, ETC AND ASSOCIATED CONDUIT/WIRIG IN THIS SPACE/ROOM.

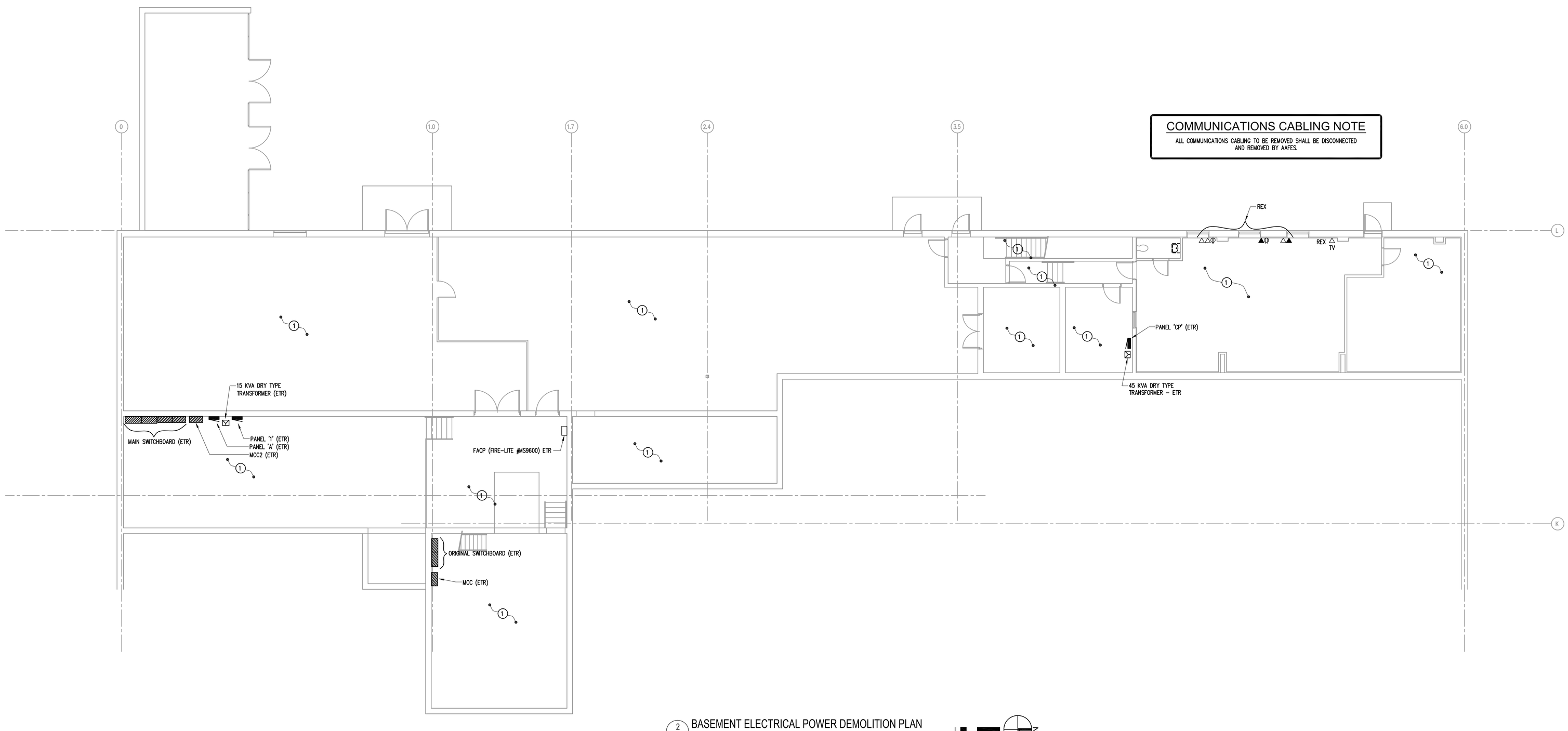

2 ED2.0 BASEMENT ELECTRICAL POWER DEMOLITION PLAN

SCALE: 1/8" = 1'-0"

0 1' 2' 4' 8'

TRUE NORTH

EXCHANGE™

ARCHITECTS • ENGINEERS • CONSTRUCTION MANAGERS ©

RICHARD L. BOWEN + ASSOCIATES INC.

13000 Shaker Boulevard / Cleveland, Ohio 44120
Phone: (216) 491-5800 Fax: (216) 491-8053
www.rlba.com - email@rlba.com

FT. MYER EXCHANGE

JBMHH - MYER
ARLINGTON, VIRGINIA

BASEMENT ELECTRICAL POWER DEMOLITION PLAN

DRAWN BY:	CAR
CHECKED BY:	GSS
RLB NO.:	7800.02

DRAWING NO.

ED2.0

P:\7800\7800.02 FT. MYER PX IMAGE UPGRADE CONST. CONTRACT DOCS\ELEC\7800.02_ED02-00.DWG | PLOTTED 04.06.2012 11:00AM BY CASEY RODDIS

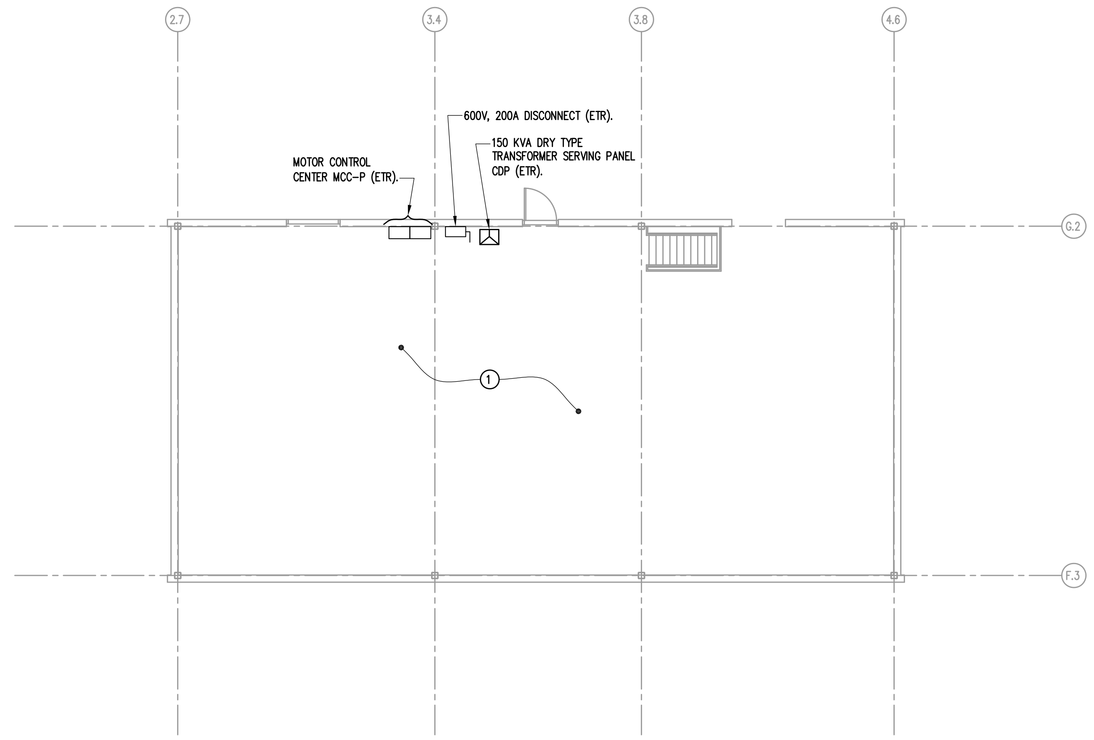

2 ED2.1 MECHANICAL PENTHOUSE ELECTRICAL DEMOLITION PLAN
SCALE: 1/8" = 1'-0"
0 1' 2' 4' 8'
N TRUE NORTH

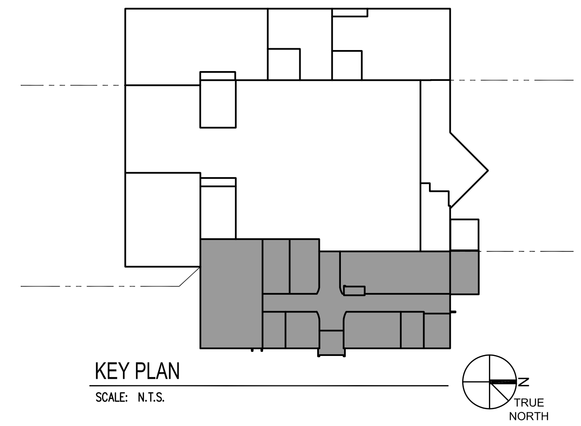

KEY PLAN
SCALE: N.T.S.

COMMUNICATIONS CABLING NOTE

ALL COMMUNICATIONS CABLING TO BE REMOVED SHALL BE DISCONNECTED AND REMOVED BY AAFES.

(X) PLAN NOTES:

1. UNO, NO ELECTRICAL DEMOLITION IN THIS AREA/ROOM.
2. DEMOLISH ALL ELECTRICAL EQUIPMENT, DEVICES, ETC AND ASSOCIATED CONDUIT/WIRING IN THIS SPACE/ROOM.
3. REMOVE EXISTING LOAD CENTER AND ASSOCIATED CONDUIT/WIRING COMPLETE TO SOURCE.
4. REMOVE EXISTING FIRE ALARM BELL/STROBE NOTIFICATION DEVICE. RECONNECT/MAINTAIN CIRCUIT TO KEEP EXISTING DEVICES CONNECTED TO THE FIRE ALARM SYSTEM.
5. REMOVE EXISTING FIRE ALARM PULL STATION INITIATING DEVICE. RECONNECT/MAINTAIN CIRCUIT TO KEEP EXISTING DEVICES CONNECTED TO THE FIRE ALARM SYSTEM.
6. DISCONNECT OVERHEAD POWER CONNECTIONS TO FIXTURE/SHELVING AND REMOVE ASSOCIATED CONDUIT/WIRING COMPLETE TO SOURCE.
7. DISCONNECT POWER TO MOTORIZED ROLL-UP GRILL. REMOVE ASSOCIATED CONTROL SWITCH AND CONDUIT/WIRING. RELOCATE EXISTING CONTROL DEVICES TO NEW LOCATION. POWER SHALL BE RELOCATED TO NEW LOCATION.
8. REPLACE WITH NEW PANEL. DISCONNECT AND RECONNECT CIRCUITS THAT ARE TO REMAIN ACTIVE AFTER DEMOLITION.
9. EWC'S TO BE REPLACED. 120V POWER/RECEPTACLE SHALL REMAIN FOR NEW EWC'S.
10. HAND DRYER'S TO BE REPLACED. 120V POWER SHALL REMAIN FOR NEW HAND DRYER'S, REFER TO DRAWING E2.1 FOR CIRCUITING.
11. DISCONNECT POWER TO EXISTING WALL MOUNTED STORE SIGN AND REMOVE ASSOCIATED CONDUIT/WIRING COMPLETE TO SOURCE.
12. DISCONNECT POWER TO EXISTING SECURITY PEDESTALS. REMOVE/RELOCATED ASSOCIATED 120V POWER AND LOW VOLTAGE EQUIPMENT TO NEW LOCATION SHOWN ON E2.2.

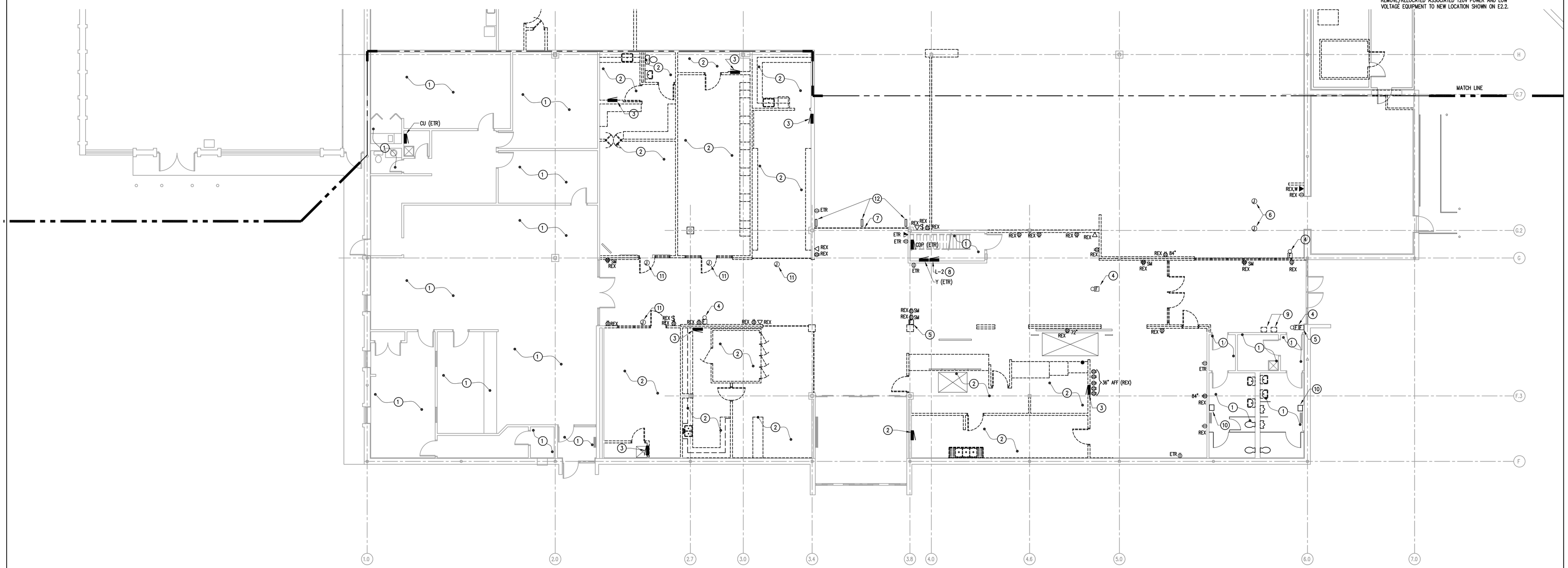

1 ED2.1 MALL & FOOD COURT ELECTRICAL POWER DEMOLITION PLAN
SCALE: 1/8" = 1'-0"
0 1' 2' 4' 8'
N TRUE NORTH

DATES AND REVISIONS	
No.	Date/Description
	04.11.12 – BID

EXCHANGE™

RICHARD L. BOWEN + ASSOCIATES INC.
13000 Shaker Boulevard / Cleveland, Ohio 44120
Phone: (216) 491-9300 Fax: (216) 491-9053
www.rlba.com - email@rlba.com

FT. MYER EXCHANGE
JBMHH - MYER
ARLINGTON, VIRGINIA

ELECTRICAL POWER DEMOLITION PLAN (AREA A)

DRAWN BY: CAR
CHECKED BY: GSS
RLB NO.: 7800.02

DRAWING NO.
ED2.1

P:\7800\7800.02 FT. MYER PX IMAGE UPGRADE CONST. CONTRACT DOCS\ELEC\7800002_ED02-01.DWG | PLOTTED 04.27.2012 08:12AM BY CASEY RODDS

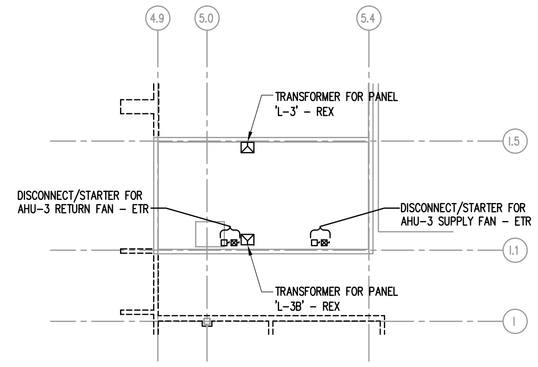

2 ED2.2 MECHANICAL PENTHOUSE ELECTRICAL POWER DEMOLITION PLAN
SCALE: 1/8" = 1'-0"

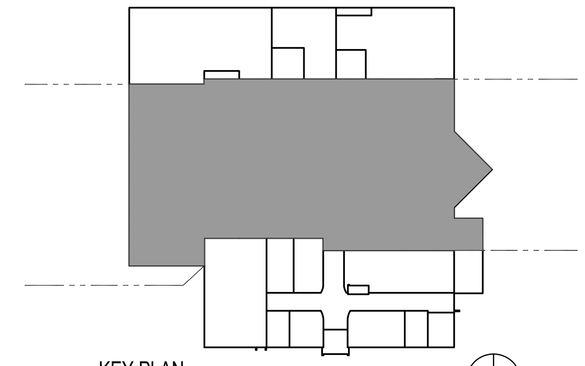

KEY PLAN
SCALE: N.T.S.

TRUE NORTH

COMMUNICATIONS CABLING NOTE

ALL COMMUNICATIONS CABLING TO BE REMOVED SHALL BE DISCONNECTED AND REMOVED BY AAFES.

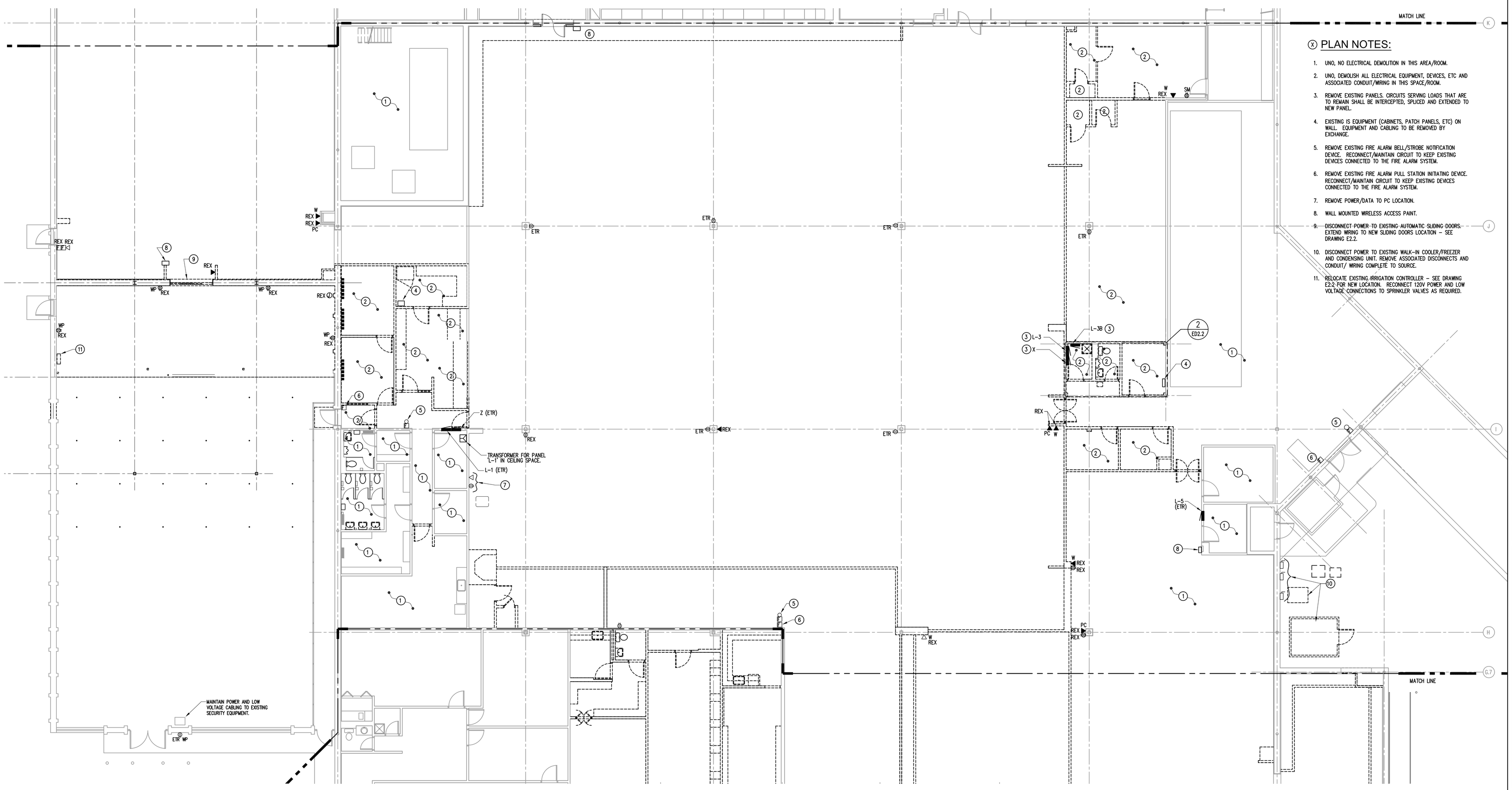

(X) PLAN NOTES:

1. UNO, NO ELECTRICAL DEMOLITION IN THIS AREA/ROOM.
2. UNO, DEMOLISH ALL ELECTRICAL EQUIPMENT, DEVICES, ETC AND ASSOCIATED CONDUIT/WIRING IN THIS SPACE/ROOM.
3. REMOVE EXISTING PANELS. CIRCUITS SERVING LOADS THAT ARE TO REMAIN SHALL BE INTERCEPTED, SPLICED AND EXTENDED TO NEW PANEL.
4. EXISTING IS EQUIPMENT (CABINETS, PATCH PANELS, ETC) ON WALL. EQUIPMENT AND CABLING TO BE REMOVED BY EXCHANGE.
5. REMOVE EXISTING FIRE ALARM BELL/STROBE NOTIFICATION DEVICE. RECONNECT/MAINTAIN CIRCUIT TO KEEP EXISTING DEVICES CONNECTED TO THE FIRE ALARM SYSTEM.
6. REMOVE EXISTING FIRE ALARM PULL STATION INITIATING DEVICE. RECONNECT/MAINTAIN CIRCUIT TO KEEP EXISTING DEVICES CONNECTED TO THE FIRE ALARM SYSTEM.
7. REMOVE POWER/DATA TO PC LOCATION.
8. WALL MOUNTED WIRELESS ACCESS PAINT.
9. DISCONNECT POWER TO EXISTING AUTOMATIC SLIDING DOORS. EXTEND WIRING TO NEW SLIDING DOORS LOCATION – SEE DRAWING E2.2.
10. DISCONNECT POWER TO EXISTING WALK-IN COOLER/FREEZER AND CONDENSING UNIT. REMOVE ASSOCIATED DISCONNECTS AND CONDUIT/ WIRING COMPLETE TO SOURCE.
11. RELOCATE EXISTING IRRIGATION CONTROLLER – SEE DRAWING E2.2 FOR NEW LOCATION. RECONNECT 120V POWER AND LOW VOLTAGE CONNECTIONS TO SPRINKLER VALVES AS REQUIRED.

1 ED2.2 RETAIL SALES AREA ELECTRICAL POWER DEMOLITION PLAN
SCALE: 1/8" = 1'-0"

TRUE NORTH

DATES AND REVISIONS

No.	Date/Description
	04.11.12 – BID

EXCHANGE™

RICHARD L. BOWEN + ASSOCIATES INC.
13000 Shaker Boulevard / Cleveland, Ohio 44120
Phone: (216) 491-8300 Fax: (216) 491-8053
www.rlba.com - email@rlba.com

FT. MYER EXCHANGE
JBMHH - MYER
ARLINGTON, VIRGINIA

ELECTRICAL POWER DEMOLITION PLAN (AREA B)

DRAWN BY: CAR
CHECKED BY: GSS
RLB NO.: 7800.02

DRAWING NO.
ED2.2

P:\7800\7800.02 FT. MYER PX IMAGE UPGRADE CONST. CONTRACT DOCS\ELEC\7800002_ED02-02.DWG | PLOTTED 04.27.2012 08:13AM BY CASEY ROODIS

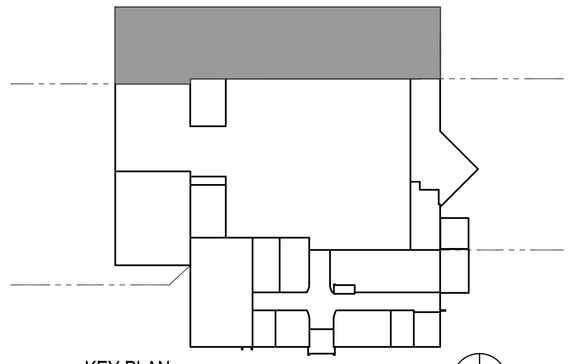

KEY PLAN

SCALE: N.T.S.

TRUE NORTH

(X) PLAN NOTES:

1. UNO, NO ELECTRICAL DEMOLITION IN THIS AREA/ROOM.
2. UNO, DEMOLISH ALL ELECTRICAL EQUIPMENT, DEVICES, ETC AND ASSOCIATED CONDUIT/WIRIG IN THIS SPACE/ROOM.
3. REMOVE EXISTING RECEPTACLE IN FLOOR BOX AND ASSOCIATED WIRING BACK TO SOURCE. PROVIDE BLANK COVERPLATE.
4. BASE BID: NO NEW WORK. OPTION #2: PERFORM ELECTRICAL WORK AS SHOWN.
5. BASE BID: EXISTING PANEL AND TRANSFORMER TO REMAIN. OPTION #2: REPLACE PANEL AND TRANSFORMER. SEE ONE-LINE DIAGRAM ON E6.0. CIRCUITS IN PANEL SERVING LOADS THAT ARE TO REMAIN SHALL BE INTERCEPTED, SPLICED AND EXTENDED TO NEW PANEL.

COMMUNICATIONS CABLING NOTE

ALL COMMUNICATIONS CABLING TO BE REMOVED SHALL BE DISCONNECTED AND REMOVED BY AAFES.

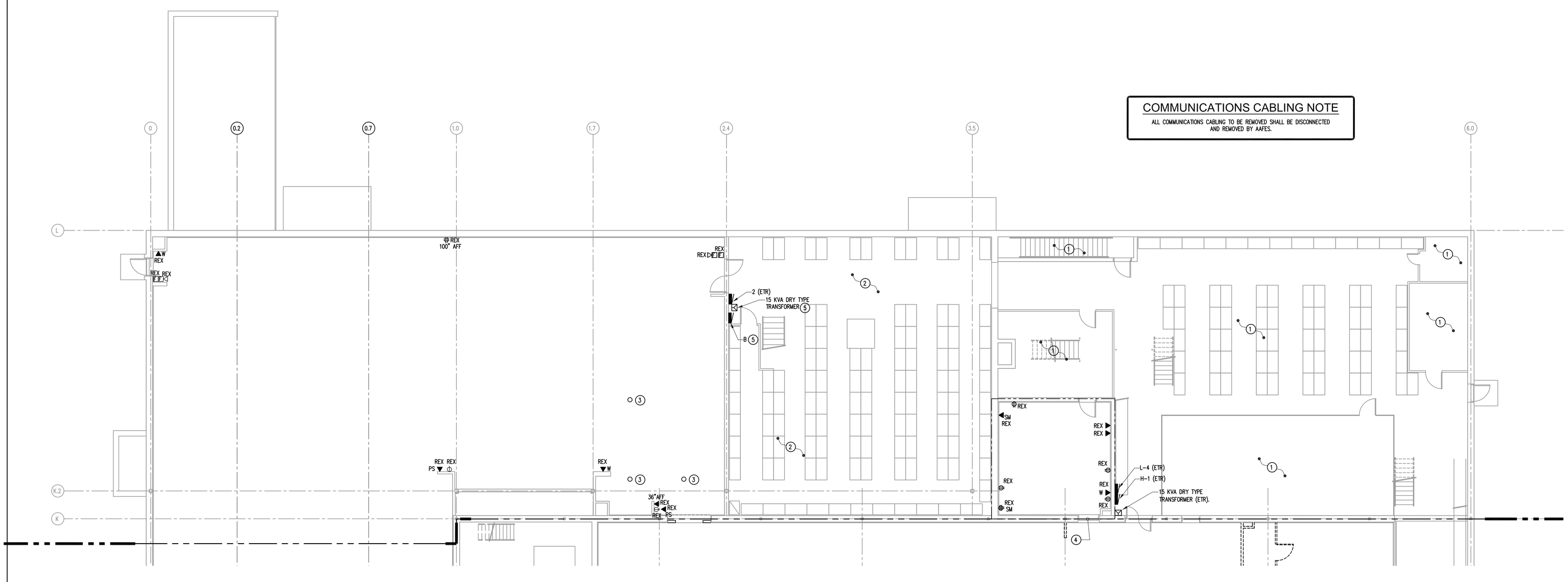

1 / ED2.3 MCSS & MPA ELECTRICAL POWER DEMOLITION PLAN

SCALE: 1/8" = 1'-0"

0 1' 2' 4' 8'

TRUE NORTH

DATES AND REVISIONS	
No.	Date/Description
	04.11.12 – BID

EXCHANGE™

RICHARD L. BOWEN + ASSOCIATES INC.

13000 Shaker Boulevard / Cleveland, Ohio 44120
Phone: (216) 491-9300 Fax: (216) 491-8053
www.rlba.com - email@rlba.com

FT. MYER EXCHANGE
JBMHH - MYER
ARLINGTON, VIRGINIA

ELECTRICAL POWER DEMOLITION PLAN (AREA C)

DRAWN BY: CAR

CHECKED BY: GSS

RLB NO.: 7800.02

DRAWING NO.

ED2.3

P:\7800\7800.02 FT. MYER PX IMAGE UPGRADE CONST. CONTRACT DOCS\ELEC\7800.02_ED02-03.DWG | PLOTTED 04-27-2012 08:13AM BY CASEY RODDS

LIGHT FIXTURE SCHEDULE

TYPE	SYM	MFGR.	CATALOG NUMBER	VOLTS	INPUT WATTS	LAMPS	MOUNT	REMARKS
AX		–	–	120/277	93	(4)F28/T8H/835 3100 LUMENS	RECESSED	EXISTING RECESSED LENSED 2'x4' WITH (4) 28W T8 LAMPS AND (1) 4–LAMP ELECTRONIC BALLAST
AXE		–	–	120/277	93	(4)F28/T8H/835 3100 LUMENS	RECESSED	EXISTING RECESSED LENSED 2'x4' WITH (4) 28W T8 LAMPS AND (1) 4–LAMP ELECTRONIC BALLAST. REMOVE BALLAST AND PROVIDE (2) 2–LAMP BALLASTS (ONE FOR OUTER LAMPS, ONE FOR INNER LAMPS). PROVIDE (1) 2–LAMP EMERGENCY BALLAST (BODINE B50) FOR INNER LAMPS.
AR		–	–	120/277	93	(4)F28/T8H/835 3100 LUMENS	RECESSED	SIMILAR TO 'AX' EXCEPT FIXTURE IS BEING RELOCATED
ARE		–	–	120/277	93	(4)F28/T8H/835 3100 LUMENS	RECESSED	SIMILAR TO 'AXE' EXCEPT FIXTURE IS BEING RELOCATED
L1		ACCESS	28204–19	120	100W	(1)A19 INC	PENDANT	GLASS PENDANT FIXTURE. FURNISHED BY CHARLEY'S SUBS.
L2		COOPER	LAZER LR338	120	150W	(1)PAR38	TRACK	TRACK MOUNTED FIXTURE. PROVIDED BY CHARLEY'S SUBS.
AP60		SEAGULL	6519–21	120	13W	13W LED	PENDANT	GLASS PENDANT FIXTURE. FURNISHED BY ANTHONY'S PIZZA.
DD1		–	–	120/277	42W	–	RECESSED	FLUORESCENT DOWNLIGHT. FURNISHED BY DUNKIN DONUTS.
DD2		–	–	120/277	88W	(3)F28/T8H/835 3100 LUMENS	RECESSED	2x4 3 LAMP PARABOLIC FIXTURE. FURNISHED BY DUNKIN DONUTS.
DL–06		TECH LIGHTING	700TT SPTC 20 3 08S	120	44	CMH39UPAR20SP10	12'–0" AFF	SUSPENDED TECH TRACK WITH CYLINDRICAL CMH ADJUSTABLE TRACK HEAD, SATIN NICKEL FINISH. OWNER FURNISHED AND INSTALLED.
1								NOT USED.
1A								NOT USED.
2		COLUMBIA LITHONIA DAYBRITE METALLUX	4PS24–232C–FSA12.125–S–EB8* 2SP8C–232–A12125–*–GEB 2DPG232–FS21–*EB 2GC8–232–A125–EB81	120/277	47	(2)F28/T8H/835 3100 LUMENS	RECESSED	2x4 2 LAMP TROFFER, LAY–IN GRID .125" THK. PRISMATIC ACRYLIC LENS PROGRAM START ELECT. BALLAST. BALLAST FACTOR=0.88
2E		COLUMBIA LITHONIA DAYBRITE METALLUX	4PS24–232C–FSA12.125–S–EB8* 2SP8C–232–A12125–*–GEB 2DPG232–FS21–*EB 2GC8–232–A125–EB81	120/277	47	(2)F28/T8H/835 3100 LUMENS	RECESSED	SAME AS TYPE '2' EXCEPT WITH BODINE B50 EMERGENCY BALLAST.
3								NOT USED.
4								NOT USED.
5								NOT USED.
5A								NOT USED.
6								NOT USED.
7								NOT USED.
8								NOT USED.
9		COLUMBIA LITHONIA DAYBRITE METALLUX	LUN8–232–EB8 TDMW–232–*–GEB TV2–WA–232–*EB 8TVT2–232–DR–*–EB81	120/277	93	(4)F28/T8H/835 3100 LUMENS	SURFACE	8' 2LAMP FIBERGLASS WET LOCATION CLR. ACRYLIC, INTERNAL PRISMS PROGRAM START ELEC. BALLAST. BALLAST FACTOR=0.88.
9A		COLUMBIA LITHONIA DAYBRITE METALLUX	LUN8–232–EB8 TDMW–232–*–GEB TV2–WA–232–*EB 8TVT2–232–DR–*–EB81	120/277	47	(2)F28/T8H/835 3100 LUMENS	SURFACE	4' 2LAMP FIBERGLASS WET LOCATION CLR. ACRYLIC, INTERNAL PRISMS PROGRAM START ELEC. BALLAST. BALLAST FACTOR=0.88.
10		COLUMBIA LITHONIA DAYBRITE METALLUX	CS4–232–EB8*–CSWG4 C–232–*–GEB–WG T232–*EB–CG4 SS–232–EB81	120/277	47	(2)F28/T8H/835 3100 LUMENS	SURFACE	4' 2 LAMP SURFACE STRIP OPEN, WITH WIREGUARD, PROGRAM START ELECT. BALLAST. BALLAST FACTOR=0.88.
11								NOT USED.
12								NOT USED.
13								NOT USED.
14								NOT USED.
15								NOT USED.
16		PINNACLE	CJ24A–2T8–G1–UNV–1C–W	120/277	47	(2)F28/T8H/835 3100 LUMENS	RECESESD	2x4 2 LAMP NON–PLANAR LENS, LAY–IN LOW GLARE, FULLY LUMINOUS, DOOR FRAME MOUNTED LENS, PROGRAM START BF=0.88 HIGH EFFICIENCY ABOVE 80%
16E		PINNACLE	CJ24A–2T8–G1–UNV–1B–W	120/277	47	(2)F28/T8H/835 3100 LUMENS	RECESESD	SAME AS FIXTURE 16, BUT WITH EMERGENCY BATTERY BALLAST.
17								NOT USED.
18								NOT USED.
18W								NOT USED.
19								NOT USED.
20		PINNACLE	G9P–2T8–4–WA–UNV–2C–W	120/277	47	(2)F28/T8H/835 3100 LUMENS	WALL @ 82" AFF	4' 2 LAMP DIRECT/INDIRECT WITH ASY. REFLECTOR AND PARABOLIC LOUVER DUAL SWITCH LAMPS, PROG. START BF=0.88
21								NOT USED.
22								NOT USED.
23								NOT USED.
24		COLUMBIA LITHONIA DAYBRITE METALLUX	WCW4–332––EU AW332––MVOLT CAW332–UNIV 4WN–328T8A–UNIV–HPT8	120/277	70	(3)F28/T8H/835 3100 LUMENS	SURFACE	4' 3 LAMP WRAPAROUND FIXTURE WITH ACRYLIC LENS SURFACE MOUNTED
24E		COLUMBIA LITHONIA DAYBRITE METALLUX	WCW4–332––EU–EL AW332––MVOLT–EL CAW332–UNIV–E5ST 4WN–328T8A–UNIVEL–HPT8	120/277	70	(3)F28/T8H/835 3100 LUMENS	SURFACE	SAME AS FIXTURE 24, BUT WITH EMERGENCY BATTERY BALLAST
25		BETA	44 0931–2–RF	277	55	57W PL–T CFL 4300 LUMENS	PENDANT	10.5" DIAMETER PENDANT FIXTURE WITH INTERNAL FACETED REFLECTOR AND ELECTRONIC BALLAST
BP		DUAL–LITE LITHONIA MCPHILBEN SURE–LITES	EZ–2 ELM2 CTX6L12WCSWD CC3WH	120/277	7	PAR36	SURFACE	THERMOPLASTIC EMERGENCY FIXTURE WITH LEAD CALCIUM BATTERY AND TWO ADJUSTABLE FIXTURE HEADS.
X		DUAL–LITE LITHONIA MCPHILBEN SURE–LITES	SE*RWE LE–SW*R–120/277–ELN ER55L–*–12/27–W–R CAX–7–1/2–70–R–W	120/277	4	INCLUDED RED LED	UNIVERSAL	DIECAST STENCIL RED LED LETTERS SGL. OR DBL. FACE AS REQUIRED WHT. HSG NiCad BATTERY PACK.
XP		DUAL–LITE LITHONIA MCPHILBEN SURE–LITES	SEWL–S–R–W–E–HTR LV–S–W–1–R–120/277–UM–ELN–CW ER6OMLD–1–R–W UX–7–O–R–WH–	120/277	4	INCLUDED RED LED	UNIVERSAL	SIMILAR TO FIXTURE 'X' BUT FOR COLD WEATHER APPLICATIONS.
EL		LITHONIA	AFN–DB–EXT	120/277	5	XENON	SURFACE	EMERGENCY LIGHTING UNIT WITH BRONZE FINISH, NI–CAD BATTERY, TIME DELAY, WET LOCATION AND COLD TEMPERATURE RATED.

ELECTRICAL SYMBOLS

- MAIN SERVICE AND DISTRIBUTION EQUIPMENT
- ELECTRICAL PANEL
- LIGHTING CONTROL RELAY CABINET, OR AS NOTED
- DUPLEX RECEPTACLE 20AMP MOUNTED 18" AFF UNLESS OTHERWISE NOTED. "CLG"–RECESSED IN CEILING, "A"–ABOVE COUNTER TOP
- GFI GROUND FAULT DUPLEX RECEPTACLE 20A
- IG ISOLATED 20A DUPLEX RECEPTACLE
- GFI WP GROUND FAULT DUPLEX RECEPTACLE WITH WEATHER PROOF IN–USE CASED COVER
- T TAMPER PROOF 20A DUPLEX RECEPTACLE
- 4–PLEX RECEPTACLE 20AMP
- JUNCTION BOX AND CONNECTION TO ADJACENT EQUIPMENT
- EF EXHAUST FAN
- S SINGLE POLE SWITCH OR AS NOTED
- 1 KEYED NOTE
- 208V RECEPTACLE
- FLUSH FLOOR BOX

FIRE ALARM SYMBOLS LEGEND

- FACP FIRE ALARM CABINET CONTROL UNIT
- V WALL MOUNTED HORN/STROBE DEVICE ('V' = VISUAL DEVICE ONLY) CANDELA RATING SHALL BE 75 CD, UON
- V CEILING MOUNTED HORN/STROBE DEVICE ('V' = VISUAL DEVICE ONLY) CANDELA RATING SHALL BE 75 CD, UON
- S SMOKE DETECTOR
- MANUAL PULL STATION WALL MOUNTED AT 45" AFF

LIGHTING SYMBOLS

- a/b LIGHTING FIXTURE NUMBER DENOTES TYPE OF FIXTURE. SEE LIGHT FIXTURE SCHEDULE. a/b DENOTES WTO LEVEL SWITCHING
- OS WALL OCCUPANCY SENSOR
- OS CEILING OCCUPANCY SENSOR
- LED EXIT LIGHT. SEE LIGHT FIXTURE SCHEDULE
- S SINGLE POLE 277/120V LIGHT SWITCH 20AMP RATED

COMMUNICATIONS/DATA SYMBOLS

- DATA/TELEPHONE OUTLET WITH 1" CONDUIT TO CABLE TRAY WITH PULL CORD FOR AF/AI DATA PLATE, JACKS AND CABLE UNLESS NOTED OTHERWISE IN CONTRACT
- W TELEPHONE OUTLET WITH 3/4" CONDUIT TO CABLE TRAY WITH PULL CORD FOR AF/AI TELEPHONE PLATE, JACK AND CABLE UNLESS OTHERWISE NOTED IN CONTRACT
- TV J–BOX AND 1" CONDUIT TO CABLE TRAY FOR AF/AI TV CABLE UNLESS NOTED OTHERWISE IN CONTRACT
- FLOOR MOUNTED DATA/TELEPHONE OUTLET WITH 1" CONDUIT TO CABLE TRAY WITH PULL CORD FOR AF/AI DATA PLATE, JACKS AND CABLE UNLESS NOTED OTHERWISE IN CONTRACT.

SECURITY SYMBOLS

- DC DOME CAMERA

SOUND SYMBOLS

- SPEAKER, CEILING FLUSH MOUNTING IN J–BAR CEILING

GENERAL ELECTRICAL NOTES:

1. THE CONTRACTOR FOR THIS WORK IS REQUIRED TO READ THE SPECIFICATIONS FOR THE COORDINATION OF THIS WORK AND THE WORK OF ALL SUBCONTRACTORS WITH ALL DIVISIONS OF WORK. IT IS THIS CONTRACTOR'S RESPONSIBILITY TO PROVIDE ALL SUBCONTRACTORS WITH A COMPLETE SET OF BID DOCUMENTS.
2. CIRCUITING INDICATED ON PLAN IS DIAGRAMMATIC FOR CLARITY. CIRCUITING SHALL BE "THRU–WIRING" WHERE AND WHENEVER POSSIBLE.
3. FIELD VERIFY EXACT LOCATION AND ELECTRICAL REQUIREMENTS OF HVAC EQUIPMENT WITH MECHANICAL CONTRACTOR PRIOR TO ORDERING RELATED ELECTRICAL EQUIPMENT.
4. RECEPTACLE CIRCUITS UP TO 100'–0" SHALL UTILIZE #12 CONDUCTORS MINIMUM. RECEPTACLE CIRCUITS FROM 101'–0" TO 150'–0" IN LENGTH SHALL UTILIZE #10 CONDUCTORS MINIMUM. RECEPTACLE CIRCUITS 151'–0" UP TO 250'–0" IN LENGTH SHALL UTILIZE #8 CONDUCTORS MINIMUM. CIRCUITS ABOVE 251'–0" SHALL UTILIZE #6 CONDUCTORS MINIMUM.
5. PLACEMENT OF RECEPTACLES IN THE SALES AREA SHALL BE INTENTIONAL (I.E. – CENTERED ON COLUMNS, WALL FEATURES OR TIGHT TO CORNERS). IF THE RECEPTACLE IS NOT SHOWN IN A DESIRABLE LOCATION, FIELD VERIFY EXACT PLACEMENT OF RECEPTACLE WITH CONSTRUCTION MANAGER PRIOR TO ROUGH–IN.
6. ELECTRICAL CONTRACTOR SHALL MAKE FINAL CONNECTIONS AS REQUIRED FOR A FULLY COMPLETE AND OPERABLE SYSTEM.
7. CONTROLS, OPERATING MECHANISMS AND HARDWARE INTENDED FOR OPERATION BY THE OCCUPANT, INCLUDING SWITCHES THAT CONTROL LIGHTING AND VENTILATION AND ELECTRICAL OUTLETS IN ACCESSIBLE SPACES, AND ALONG ACCESSIBLE ROUTE SHALL BE ACCESSIBLE COMPLYING WITH ICC/ANSI A117.1–1998, SEC. 308; SEC. 1105.4.5, UBC. THE LOWER REACH HEIGHT MINIMUM IS 15 INCHES AFF, MAXIMUM 48 INCHES AFF FOR AN UNOBSTRUCTED FORWARD AND SIDE REACH, 44 INCES FOR AN OBSTRUCTED FORWARD REACH, AND 46 INCHES FOR AN OBSTRUCTED SIDE REACH.
8. ALL UNUSED PIPING, WIRING AND EQUIPMENT SHALL BE REMOVED, NOT ABANDONED IN PLACE.
9. REFER TO ARCHITECTURAL FIXTURE PACKAGE/MILLWORK DETAILS FOR ADDITIONAL INFORMATION ON ALL DEVICES AT MILLWORK LOCATIONS. COORDINATE THE INSTALLATION OF ALL MILLWORK DEVICES SO THEY ARE FULLY ACCESSIBLE.
10. COORDINATE ALL WORK WITH THE PHASING PLAN.

ABBREVIATIONS

A	AMPERE
AC	AIR CONDITIONING UNIT
AFC	ABOVE FINISHED CEILING
AFF	ABOVE FINISHED FLOOR
AHJ	AUTHORITY HAVING JURISDICTION
AHU	AIR HANDLING UNIT
AL	ALUMINUM
ARCH	ARCHITECT
@	AT
ADD	ADDENDUM
BFR	BACKFLOW PREVENTOR
BKBD	BACKBOARD
BLDG	BUILDING
BSMT	BASEMENT
CAB	CABINET
CATV	CABLE TELEVISION
CB	CIRCUIT BREAKER
CGB	COMMUNICATIONS GROUND BUSBAR
CCTV	CLOSED CIRCUIT TELEVISION
CKT	CIRCUIT
CLG	CEILING
CLK	CLOCK
CONC	CONCRETE
COND	CONDUCTOR
C	CONDUIT
CO	CONDUIT ONLY
CONN	CONNECTION
CONTR	CONTRACTOR
CLRM	CLASSROOM
COORD	COORDINATE
CU	COPPER OR CONDENSING UNIT
CUH	CABINET UNIT HEATER
DDC	DIRECT DIGITAL CONTROL SYSTEM
DEMARC	DEMARCATION
DISK	DISCONNECT SWITCH
DWG	DRAWING
EA	EACH
ELEC	ELECTRIC(AL)
EWC	ELECTRIC WATER COOLER
EF	EXHAUST FAN
ETR	EXISTING TO REMAIN
EXIST	EXISTING
EXP	EXPLOSION PROOF
EXT	EXTERIOR
FA	FIRE ALARM
FC	FUN COIL
FLR	FLOOR
FIXT	FIXTURE
F/SD	FIRE/SMOKE DAMPER
FUOC	FURNISHED UNDER OTHER CONTRACT
FUT	FUTURE
GND	GROUND
GFI/GFCI	GROUND FAULT INTERRUPTER
HOA	HAND–OFF–AUTO
HP	HORSEPOWER OR HEAT PUMP
HWH	HOT WATER HEATER
HTR	HEATER
IDF	ITERMEDIATE DISTRIBUTION FRAME
IS	ISOLATED GROUND
JB	JUNCTION BOX
KW	KILOWATT(S)
KVA	KILOVOLT–AMPERE(S)
LT(S)	CHAMFER
LTG	LIGHTING
MAX	MAXIMUM
MDF	MAIN DISTRIBUTION FRAME
MDS	MAIN DISTRIBUTION SWITCHBOARD
MFR	MANUFACTURER
MIN	MINIMUM
MISC	MISCELLANEOUS
MC	MOMENTARY CONTACT
MOA	MULTIPLE OUTLET ASSEMBLY
MS	MANUAL STARTER
MSGB	MAIN SERVICE GROUND BUSBAR
MTGB	MAIN TELECOM GROUND BUSBAR
MT(D)	MOUNT(ED)
MTR	MOTOR
NEC	NATIONAL ELECTRICAL CODE(LATEST EDITION)
NL	NIGHT LIGHT (DUSK TO DAWN OPERATION)
NIC	NOT IN CONTRACT
NTS	NOT TO SCALE
NO	NORMALLY OPEN
NC	NORMALLY CLOSED
OC	ON CENTER(S)
OFCI	OWNER FURNISHED, CONTRACTOR INSTALLED
OFOI	OWNER FURNISHED, OWNER INSTALLED
OH	OVERHEAD
OS&Y	OS&Y VALVE
PDU	POWER DISTRIBUTION UNIT
PNL	PANEL
PB	PUSHBUTTON
PIV	POST INDICATOR VALVE
PRI	PRIMARY
PVC	POLYVINYL CHLORIDE
PC	PHOTOCELL
RECEPT	RECEPTACLE
REX	REMOVE EXISTING DEVICE/EQUIPMENT
RR	REMOVE AND RELOCATE
RQD	REQUIRE
SEC	SECONDARY
SHT	SHEET
SPK	SPEAKER
SPEC	SPECIFICATION(S)
SQ	SQUARE
SS	STAINLESS STEEL
STD	STANDARD
SO	STUB OUT
SU	STUB UP
SURF	SURFACE
SW	SWITCH
SWBD	SWITCHBOARD
TEL	TELEPHONE
TYP	TYPICAL
UH	UNIT HEATER
UON	UNLESS OTHERWISE NOTED
V	VOLTS
WG	DEMOUNTABLE
WP	WEATHER PROOF
W	DESIGN PACKAGE
W/	WITH
W/O	WITHOUT
XFMR	TRANSFORMER

DATES AND REVISIONS

No.	Date/Description
	04.11.12 – BID

EXCHANGE™

RICHARD L. BOWEN + ASSOCIATES INC.
ARCHITECTS • ENGINEERS • MANAGERS • CONSTRUCTION
13000 Shaker Boulevard / Cleveland, Ohio 44120
Phone: (216) 491-8300 Fax: (216) 491-8053
www.rlba.com - email@rlba.com

FT. MYER EXCHANGE
JBMHH - MYER
ARLINGTON, VIRGINIA

ABBREVIATIONS/SHEET INDEX
SYMBOLS/ LIGHTING SCHEDULE

DRAWN BY: CAR
CHECKED BY: GSS
RLB NO.: 7800.02

DRAWING NO.
E0.1

P:\7800\7800.02 FT. MYER PX IMAGE UPGRADE CONST. CONTRACT DOCS\ELEC\7800.02_E00–01.DWG | PLOTTED 04.27.2012 07:55AM BY CASEY ROODS

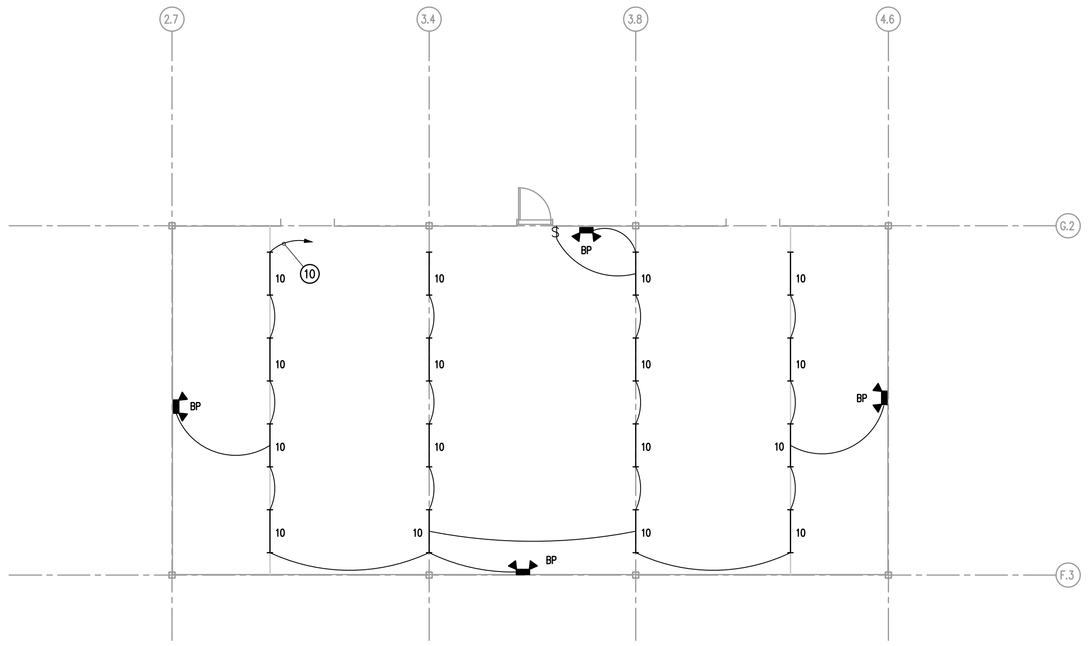

2 E1.1 MECHANICAL PENTHOUSE LIGHTING PLAN
SCALE: 1/8" = 1'-0"
0 1' 2' 4' 8'
TRUE NORTH

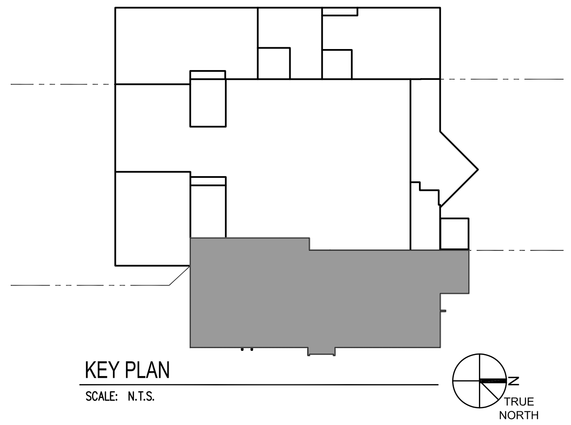

KEY PLAN
SCALE: N.T.S.

GENERAL NOTES:

1. UNLESS OTHERWISE NOTED, WIRE ALL EXIT SIGNS AND EMERGENCY LIGHTING BALLASTS AHEAD OF SWITCHING AND RELAY CONTROL.

OPTION 3:

1. RETROFIT ALL 'AX' AND 'AR' LIGHTING FIXTURES TO (3) 28W T8 LAMPS, NEW REFLECTOR AND (1) 3-LAMP HIGH PERFORMANCE ELECTRONIC BALLAST.
2. RETROFIT ALL 'AXE' AND 'ARE' LIGHTING FIXTURES TO (3) 28W T8 LAMPS, NEW REFLECTOR, AND (2) HIGH PERFORMANCE ELECTRONIC BALLASTS (ONE FOR OUTER LAMPS AND ONE FOR MIDDLE LAMP). PROVIDE (1) 1-LAMP EMERGENCY BALLAST (BODINE B-50) FOR MIDDLE LAMP.
3. RETROFIT KITS SHALL BE TEXAS FLUORESCENTS #24C3W10B, METALUX #ART-2CRK-328-WQ, OR EQUAL.
4. PRIOR TO ORDERING, CONTRACTOR SHALL RETROFIT ONE LIGHT FIXTURE WITH PROPOSED KIT TO ENSURE COMPATIBILITY.

(X) PLAN NOTES:

1. UNLESS OTHERWISE NOTED, NO NEW WORK IN THIS AREA.
2. REPLACE LAMP WITH NEW AND PROVIDE NEW BATTERY UNIT.
3. CLEAN AND REPLACE LAMP(S) WITH NEW.
4. LIGHTING CONTROL PANEL LCP1. REFER TO LIGHTING CONTROL PANEL DETAIL ON DRAWING E6.0 FOR FURTHER INFORMATION.
5. REMOVE LIGHT SWITCH AND INSTALL WALL MOUNTED OCCUPANCY SENSOR SWITCH.
6. PROVIDE CEILING MOUNTED OCCUPANCY SENSOR AND ASSOCIATED POWER PACK. WIRE TO CONTROL ROOM'S LIGHT FIXTURES.
7. EXISTING LIGHT SWITCH.
8. WIRE BALLAST CONTROLLING INNER LAMP(S) TO NIGHT LIGHT/EMERGENCY/EXIT SIGN CIRCUIT. BALLAST CONTROLLING OUTER LAMPS SHALL BE WIRED TO CONTACTOR CONTROLLED AND/OR SWITCHED CIRCUIT.
9. WIRE THROUGH LIGHTING CONTROL PANEL 'LCP1'.
10. CONNECT TO LIGHTING CIRCUIT SERVING THIS AREA MADE AVAILABLE DURING DEMOLITION.

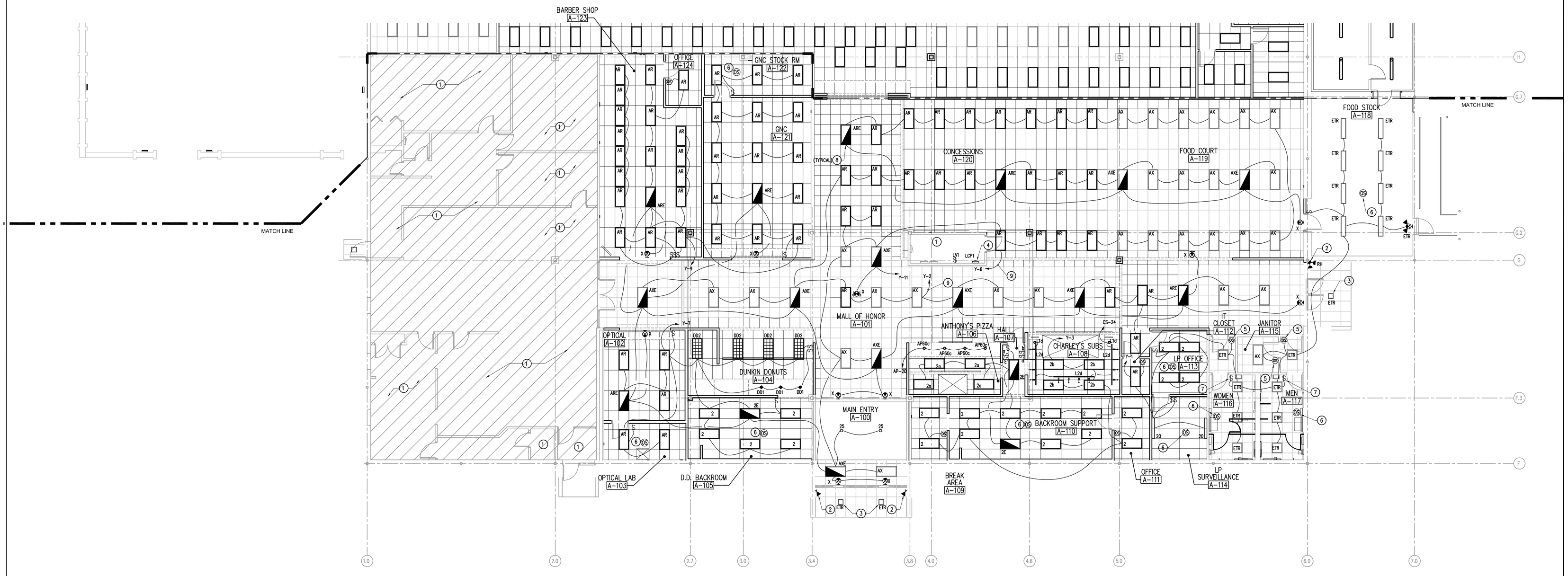

1 E1.1 MALL & FOOD COURT LIGHTING PLAN
SCALE: 1/8" = 1'-0"
0 1' 2' 4' 8'
TRUE NORTH

DATES AND REVISIONS	
No.	Date/Description
	04.11.12 – BID

EXCHANGE™

RICHARD L. BOWEN + ASSOCIATES INC.
ARCHITECTS • ENGINEERS • CONSTRUCTION MANAGERS
13000 Shaker Boulevard / Cleveland, Ohio 44120
Phone: (216) 491-9300 Fax: (216) 491-8053
www.rlba.com - email@rlba.com

FT. MYER EXCHANGE
JBMHH - MYER
ARLINGTON, VIRGINIA

LIGHTING PLAN (AREA A)

DRAWN BY: CAR
CHECKED BY: GSS
RLB NO.: 7800.02

DRAWING NO.
E1.1

P:\7800\7800.02 FT. MYER PX IMAGE UPGRADE CONST. CONTRACT DOCS\ELEC\7800.02_E01-01.DWG | PLOTTED 04.27.2012 09:05AM BY CASEY RODDIS

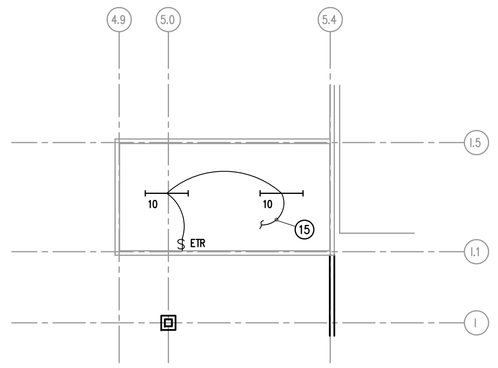

2 E1.2 PENTHOUSE LIGHTING PLAN
SCALE: 1/8" = 1'-0"

(X) PLAN NOTES:

1. NO NEW WORK IN THIS AREA UNLESS OTHERWISE NOTED.
2. LIGHTING CONTROL PANEL LCP2. REFER TO LIGHTING CONTROL PANEL DETAIL ON DRAWING E6-00 FOR FURTHER INFORMATION.
3. RELOCATED WALL MOUNTED DIRECTIONAL CORNICE LIGHTING, REWORK ROW LENGTHS AS INDICATED.
4. REINSTALL LIGHT FIXTURE FROM DEMOLITION.
5. REMOVE LIGHT SWITCH AND INSTALL WALL MOUNTED OCCUPANCY SENSOR.
6. WIRE BALLAST CONTROLLING INNER LAMP(S) TO NIGHT LIGHT/EMERGENCY/EXIT SIGN CIRCUIT. BALLAST CONTROLLING OUTER LAMPS SHALL BE WIRED TO CONTACTOR CONTROLLED AND/OR SWITCHED CIRCUIT.
7. LIGHTING CONTROL PANEL LCP3. REFER TO LIGHTING CONTROL PANEL DETAIL ON DRAWING E6-00 FOR FURTHER INFORMATION.
8. CIRCUIT SHALL BE CONTROLLED THROUGH LIGHTING CONTROL PANEL 'LCP2'.
9. CIRCUIT SHALL BE CONTROLLED THROUGH LIGHTING CONTROL PANEL 'LCP3'.
10. PROVIDE CEILING MOUNTED OCCUPANCY SENSOR AND ASSOCIATED POWER PACK. WIRE TO CONTROL ROOM'S LIGHT FIXTURES.
11. CLEAN AND RE-LAMP EXISTING LIGHT FIXTURE.
12. MOUNT 8" BELOW CANOPY.
13. MOUNT AT 2' ABOVE DOOR.
14. CONNECT TO EXISTING BRANCH CIRCUIT WIRING SERVING EXISTING LIGHT FIXTURES.
15. CONNECT TO LIGHTING CIRCUIT SERVING THIS AREA MADE AVAILABLE DURING DEMOLITION.

OPTION 3:

1. RETROFIT ALL 'AX' AND 'AR' LIGHTING FIXTURES TO (3) 28W T8 LAMPS, NEW REFLECTOR AND (1) 3-LAMP HIGH PERFORMANCE ELECTRONIC BALLAST.
2. RETROFIT ALL 'AXE' AND 'ARE' LIGHTING FIXTURES TO (3) 28W T8 LAMPS, NEW REFLECTOR, AND (2) HIGH PERFORMANCE ELECTRONIC BALLASTS (ONE FOR OUTER LAMPS AND ONE FOR MIDDLE LAMP). PROVIDE (1) 1-LAMP EMERGENCY BALLAST (BODINE B-50) FOR MIDDLE LAMP.
3. RETROFIT KITS SHALL BE TEXAS FLUORESCENTS #24C3W10B, METALUX #ART-2CRK-328-WO, OR EQUAL.
4. PRIOR TO ORDERING, CONTRACTOR SHALL RETROFIT ONE LIGHT FIXTURE WITH PROPOSED KIT TO ENSURE COMPATIBILITY.

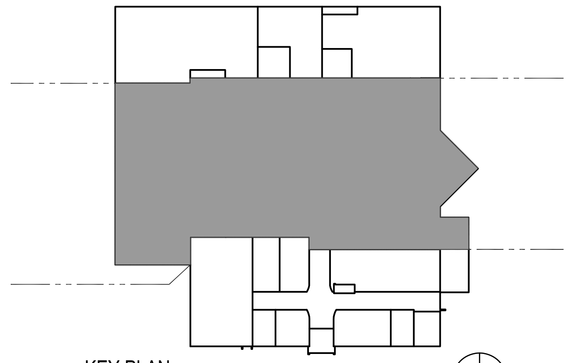

KEY PLAN
SCALE: N.T.S.

GENERAL NOTES:

1. UNLESS OTHERWISE NOTED, WIRE ALL EXIT SIGNS AND EMERGENCY LIGHTING BALLASTS AHEAD OF SWITCHING AND CONTACTOR CONTROL.

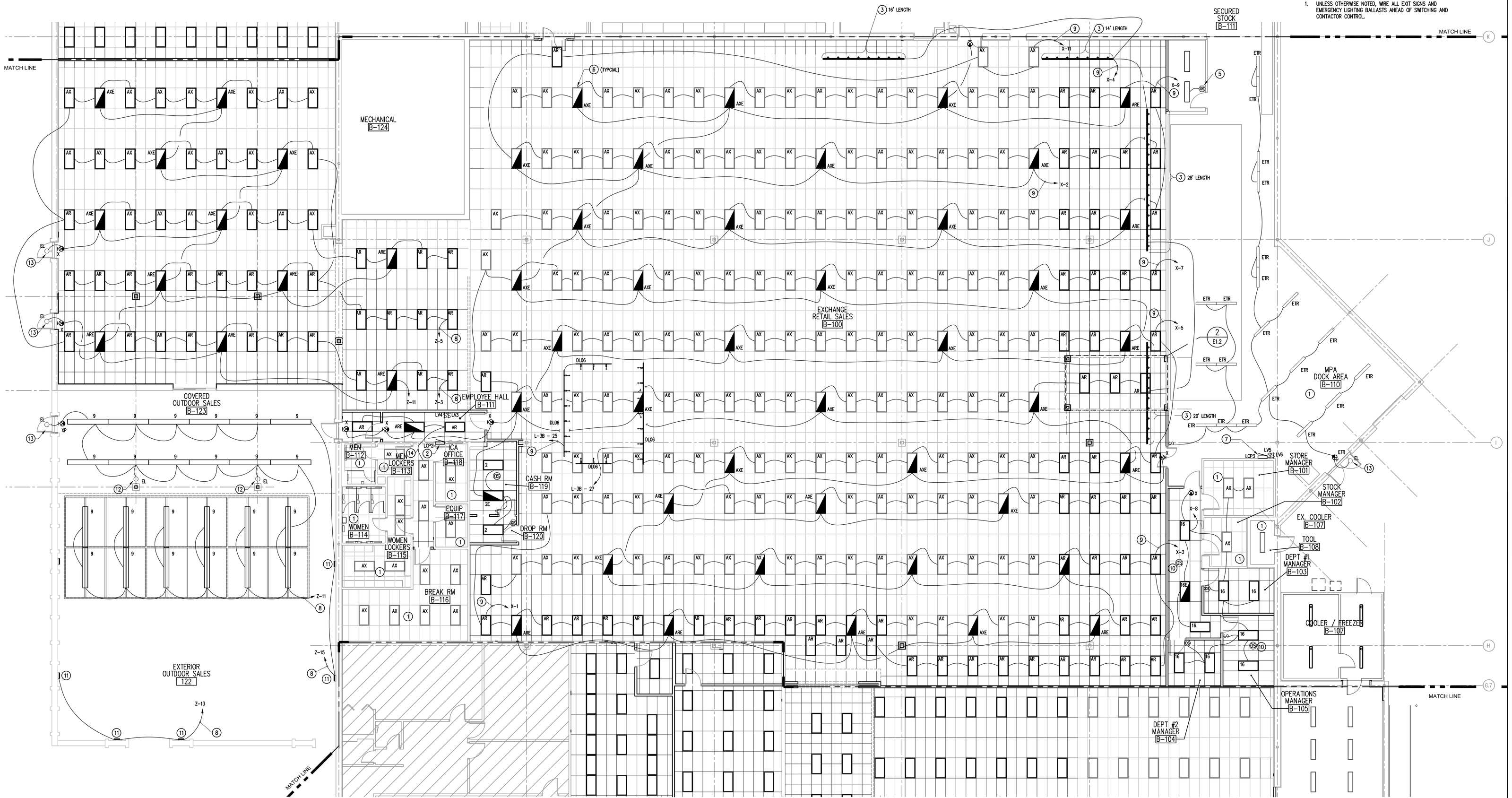

1 E1.2 RETAIL SALES AREA LIGHTING PLAN
SCALE: 1/8" = 1'-0"

DATES AND REVISIONS	
No.	Date/Description
	04.11.12 – BID

EXCHANGE™

RICHARD L. BOWEN + ASSOCIATES INC.
ARCHITECTS • ENGINEERS • CONSTRUCTION MANAGERS
13000 Shaker Boulevard | Cleveland, Ohio 44120
Phone: (216) 491-9300 Fax: (216) 491-9053
www.rlba.com - email@rlba.com

FT. MYER EXCHANGE
JBMHH - MYER
ARLINGTON, VIRGINIA

LIGHTING PLAN (AREA B)

DRAWN BY:	CAR
CHECKED BY:	GSS
RLB NO.:	7800.02

DRAWING NO.
E1.2

P:\7800\7800.02 FT. MYER PX IMAGE UPGRADE CONST. CONTRACT DOCS\ELEC\7800.02_E01-02.DWG | PLOTTED 04.27.2012 07:57AM BY CASEY RODDIS

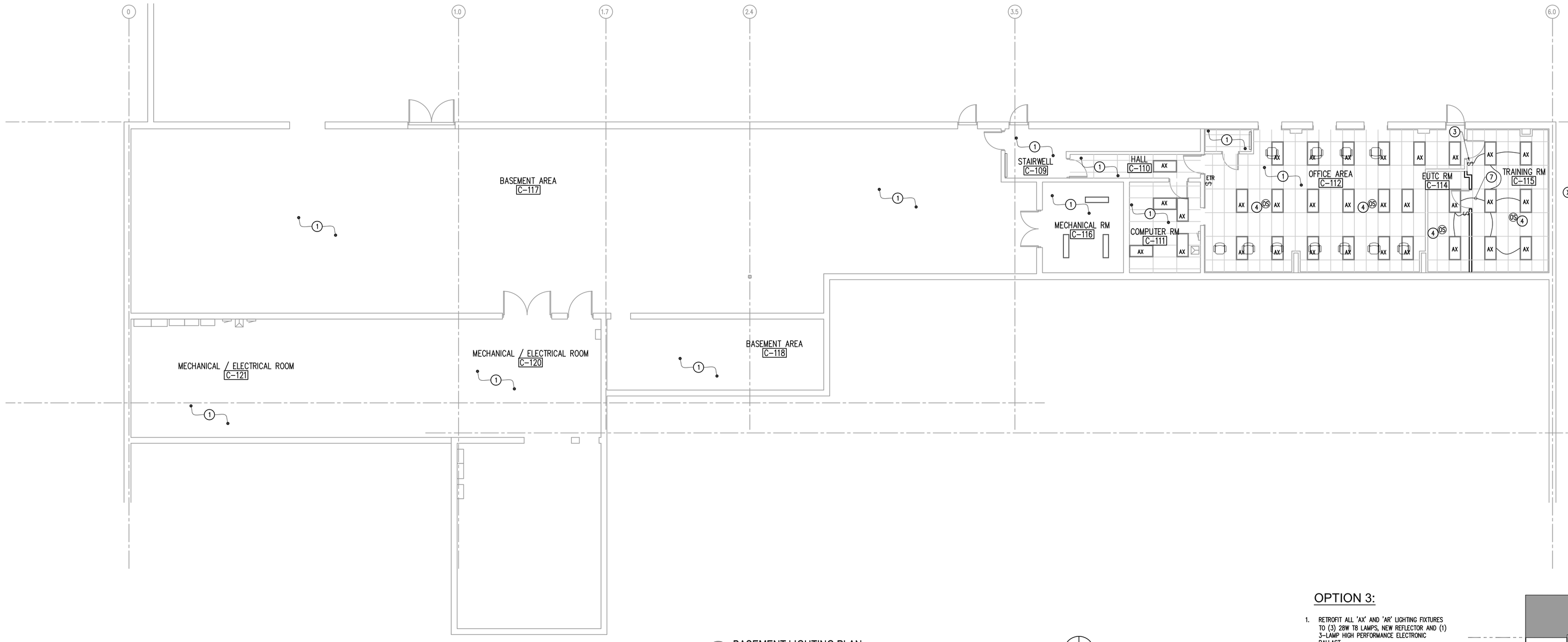

2 E1.3 BASEMENT LIGHTING PLAN
SCALE: 1/8" = 1'-0"

GENERAL NOTES:

1. UNLESS OTHERWISE NOTED, WIRE ALL EXIT SIGNS AND EMERGENCY LIGHTING BALLASTS AHEAD OF SWITCHING AND CONTACTOR CONTROL.

(X) PLAN NOTES:

1. UNLESS OTHERWISE NOTED, NO NEW WORK IN THIS AREA UNLESS OTHERWISE NOTED.
2. LIGHTING CONTROL PANEL LCP4. REFER TO LIGHTING CONTROL PANEL DETAIL ON DRAWING E6.0 FOR FURTHER INFORMATION.
3. PROVIDE LIGHT SWITCH TO CONTROL ROOM'S LIGHTS.
4. PROVIDE CEILING MOUNTED OCCUPANCY SENSOR AND ASSOCIATED POWER PACK TO CONTROL ROOM'S LIGHTS.
5. BASE BID: NO NEW WORK. OPTION #2: PERFORM ELECTRICAL WORK AS SHOWN.
6. LIGHT FIXTURE SHALL BE INSTALLED AS PART OF BASE BID..
7. REWORK WIRING TO LIGHTS IN EUTC ROOM SO THEY CAN BE SWITCHED SEPARATELY FROM TRAINING ROOM.
8. WIRE BALLAST CONTROLLING INNER LAMP(S) TO NIGHT LIGHT/EMERGENCY/EXIT SIGN CIRCUIT. BALLAST CONTROLLING OUTER LAMPS SHALL BE WIRED TO CONTACTOR CONTROLLED AND/OR SWITCHED CIRCUIT.
9. CIRCUIT SHALL BE CONTROLLED THROUGH LIGHTING CONTROL PANEL 'LCP4'.
10. MOUNT AT 2' ABOVE DOOR.

OPTION 3:

1. RETROFIT ALL 'AX' AND 'AR' LIGHTING FIXTURES TO (3) 28W T8 LAMPS, NEW REFLECTOR AND (1) 3-LAMP HIGH PERFORMANCE ELECTRONIC BALLAST.
2. RETROFIT ALL 'AXE' AND 'ARE' LIGHTING FIXTURES TO (3) 28W T8 LAMPS, NEW REFLECTOR, AND (2) HIGH PERFORMANCE ELECTRONIC BALLASTS (ONE FOR OUTER LAMPS AND ONE FOR MIDDLE LAMP). PROVIDE (1) 1-LAMP EMERGENCY BALLAST (BODINE B-50) FOR MIDDLE LAMP.
3. RETROFIT KITS SHALL BE TEXAS FLUORESCENTS #24C3W10B, METALUX #ART-2CRK-328-WO, OR EQUAL.
4. PRIOR TO ORDERING, CONTRACTOR SHALL RETROFIT ONE LIGHT FIXTURE WITH PROPOSED KIT TO ENSURE COMPATIBILITY.

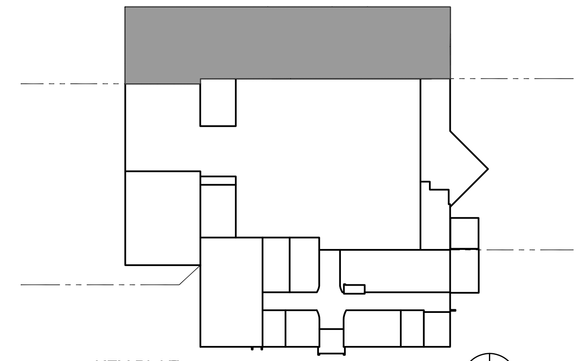

KEY PLAN
SCALE: N.T.S.

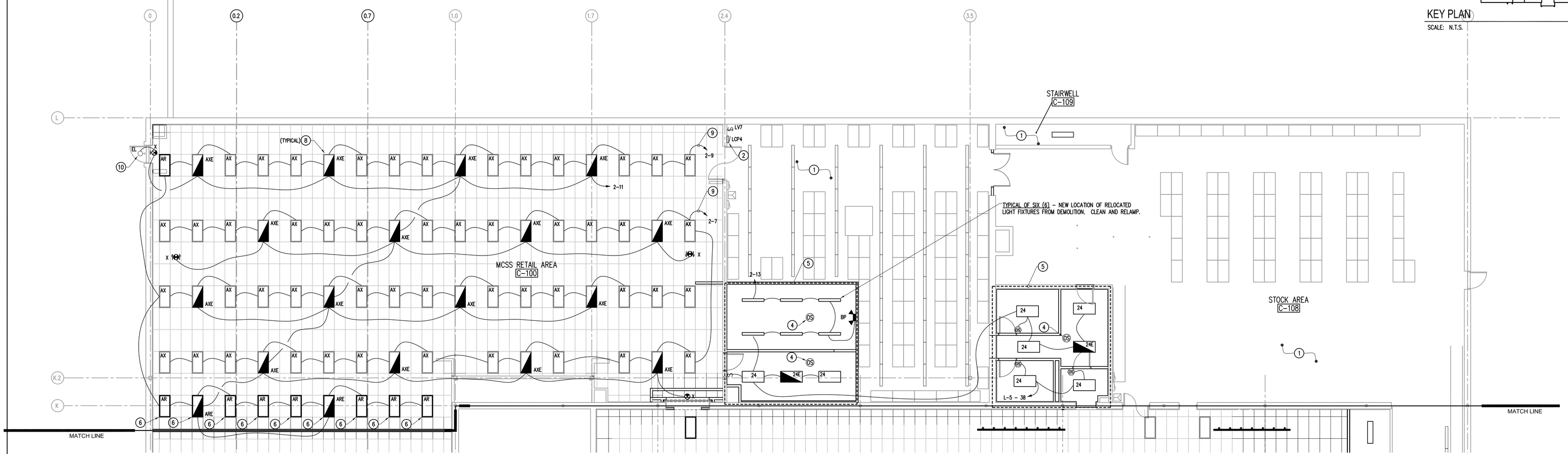

1 E1.3 MCSS & MPA LIGHTING PLAN
SCALE: 1/8" = 1'-0"

DATES AND REVISIONS	
No.	Date/Description
	04.11.12 - BID

EXCHANGE™

RICHARD L. BOWEN + ASSOCIATES INC.
13000 Shaker Boulevard / Cleveland, Ohio 44120
Phone: (216) 491-8300 Fax: (216) 491-8053
www.rlba.com - email@rlba.com

FT. MYER EXCHANGE
JBMHH - MYER
ARLINGTON, VIRGINIA

LIGHTING PLAN (AREA C)

DRAWN BY: CAR
CHECKED BY: GSS
RLB NO.: 7800.02

DRAWING NO.
E1.3

P:\7800\7800.02 FT. MYER PX IMAGE UPGRADE CONST. CONTRACT DOCS\ELEC\780002_E01-03.DWG | PLOTTED 04.27.2012 07:57AM BY CASEY RODDIS

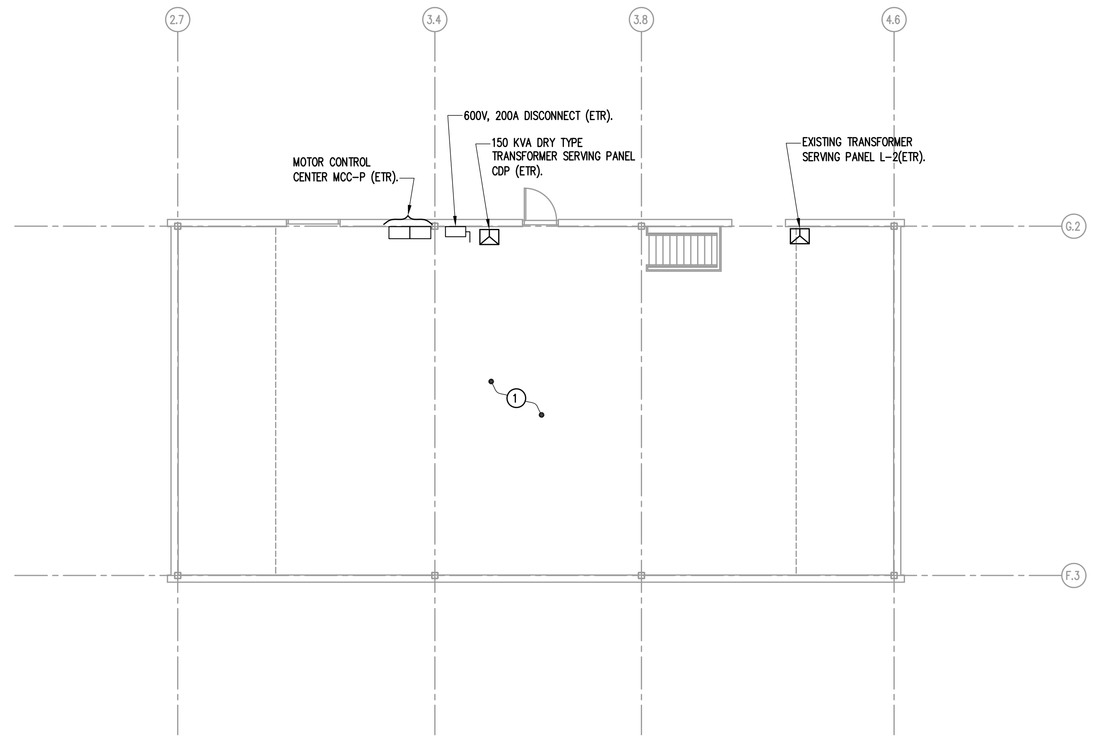

2 E2.1 MECHANICAL PENTHOUSE POWER PLAN
SCALE: 1/8" = 1'-0"
0 1' 2' 4' 8'
N TRUE NORTH

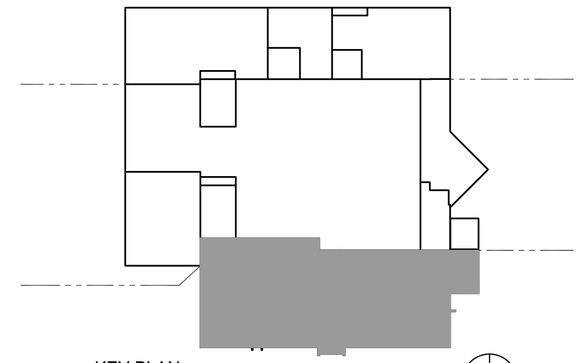

KEY PLAN
SCALE: N.T.S.
N TRUE NORTH

(X) PLAN NOTES:

1. NO NEW WORK IN THIS AREA UNLESS OTHERWISE NOTED.
2. REPLACE EXISTING DUPLEX OUTLET WITH NEW INCLUDING COVER PLATE.
3. ROOFTOP CONDENSING UNIT 'CU-2' – 208V, 1Ø, 13 MCA, PROVIDE WEATHERPROOF DISCONNECT. WIRE TO PANEL 'L-2', CIRCUIT #31,33. PROVIDE (2)#12, (1)#12 GND.
4. INDOOR SPLIT SYSTEM UNIT 'FCU-2' – 208V, 1Ø, PROVIDE DISCONNECT. POWER WITH 'CU-2'.
5. HOT WATER CABINET UNIT HEATER 'CUH-1' – 120V, 4 MCA. PROVIDE MEANS OF DISCONNECT AT UNIT.
6. PROVIDE 120V POWER FOR ELECTRIC HAND DRYERS, 900W.
7. PROVIDE SINGLE GANG BOX FLUSH IN WALL AT 44" AFF FOR DURESS SWITCH WITH KEY RESET.
8. PROVIDE (3) 4" CONDUITS THROUGH WALL AT 12" AFC. ROUTE ONE CONDUIT TO ABOVE MALL CEILING SPACE AND TWO CONDUITS TO ABOVE SALES CEILING SPACE.
9. PROVIDE 12"x12"x4"D JUNCTION BOX FLUSH IN WALL AT 24" AFF FOR SECURITY CABLES. PROVIDE (3) 3" CONDUITS FROM BOX TO 12" ABOVE CEILING SPACE. FRONT COVER OF BOX SHALL HAVE (3) 3" GROMETTED OPENINGS.
10. REPLACE EXISTING OUTLET ABOVE COUNTER WITH NEW GFCI DUPLEX RECEPTACLE INCLUDING NEW COVER PLATE.
11. OVERHEAD ROLL-UP GRILL – RECONNECT POWER FROM DEMOLITION AND INSTALL EXISTING CONTROL DEVICES.
12. PROVIDE 120V FOR CONTROL POWER TO REHEAT TERMINALS. COORDINATE FINAL LOCATION IN FIELD. TRANSFORMER AND DISCONNECT PROVIDED BY MC.
13. PROVIDE FLUSH MOUNTED FLOOR BOX WITH DUPLEX RECEPTACLE AND TELE/DATA OPENINGS. PROVIDE (1) 3/4" CONDUIT WITH PULLWIRE FOR TELE/DATA CABLING FROM BOX TO NEAREST STUD WALL AND UP TO CEILING SPACE. GC SHALL CUT AND PATCH FLOOR AS REQUIRED.
14. PROVIDE 12"x1/4"x4" COPPER GROUND BAR (ERITECH #TMGB-A12L15PT) ON WALL AT 24" AFF. PROVIDE #6 COPPER CONDUCTOR FROM GROUND BAR TO BUILDING'S MAIN GROUNDING ELECTRODE SYSTEM.

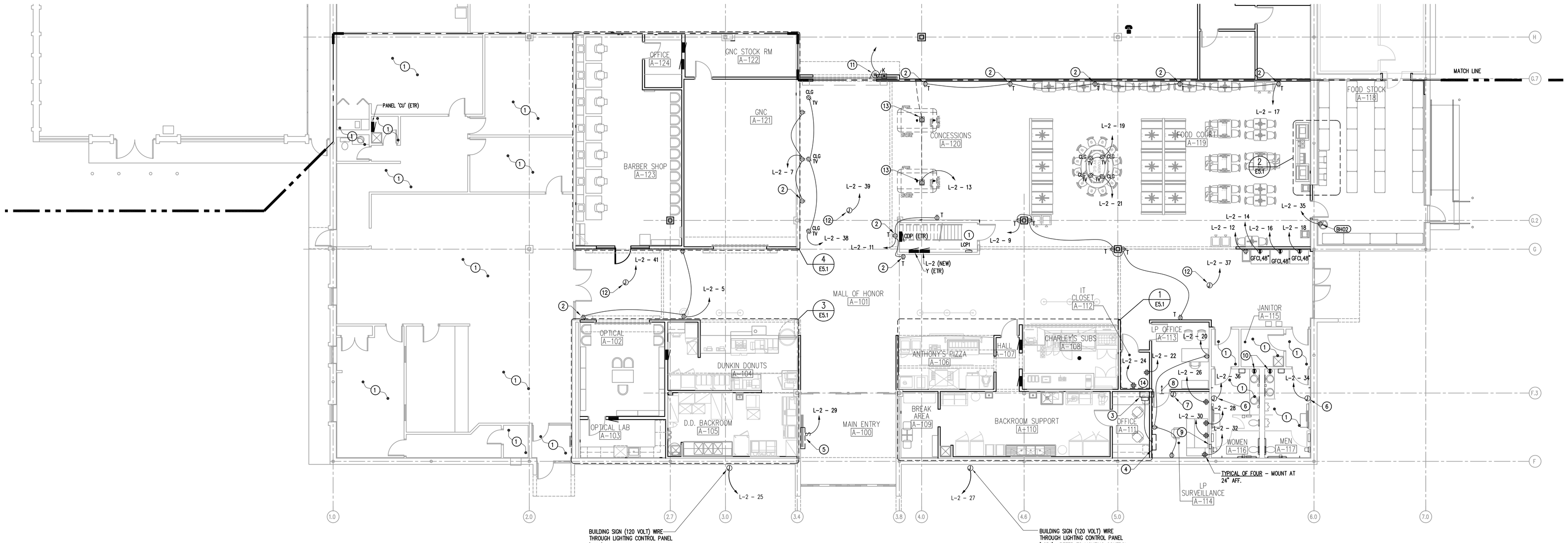

1 E2.1 MALL & FOOD COURT POWER PLAN
SCALE: 1/8" = 1'-0"
0 1' 2' 4' 8'
N TRUE NORTH

DATES AND REVISIONS	
No.	Date/Description
	04.11.12 – BID

EXCHANGE™

RICHARD L. BOWEN + ASSOCIATES INC.
13000 Shaker Boulevard / Cleveland, Ohio 44120
Phone: (216) 491-9300 Fax: (216) 491-8053
www.rlba.com - email@rlba.com

FT. MYER EXCHANGE
JBMHH - MYER
ARLINGTON, VIRGINIA

POWER PLAN (AREA A)

DRAWN BY: CAR
CHECKED BY: GSS
RLB NO.: 7800.02

DRAWING NO.
E2.1

P:\7800\7800.02 FT. MYER PX IMAGE UPGRADE CONST. CONTRACT DOCS\ELEC\7800.02_E02-01.DWG | PLOTTED 04.27.2012 07:58AM BY CASEY ROODS

ⓧ PLAN NOTES:

1. NO NEW WORK IN THIS AREA UNLESS OTHERWISE NOTED.
2. PROVIDE NEW PERMANENT LABEL ON FRONT OF PANEL 'L-5'.
3. EXISTING 480V, 30AS DISCONNECT FOR BAILER. REWORK 40A FEEDER TO NEW PANEL 'X'.
4. PROVIDE DUAL CHANNEL POWER POLE WITH DIVIDER FOR POWER AND COMMUNICATIONS.
5. PROVIDE SINGLE CHANNEL POWER POLE FOR POWER.
6. PROVIDE 120V POWER TO SAFE. COORDINATE WITH SAFE INSTALLER.
7. PROVIDE (4) 120V, 20A CIRCUITS FOR CONNECTIONS TO COOLER/FREEZER DOOR LIGHTS AND HEATERS, VENT PORTS AND DRAIN LINE HEATER. PROVIDE LIGHT SWITCHES, LOCAL DISCONNECTS AND MAKE FINAL CONNECTIONS AS DIRECTED BY COOLER/FREEZER INSTALLER.
8. RELOCATED FAN COIL UNIT IN CEILING. RECONNECT POWER.
9. PROVIDE POWER TO AUTOMATIC SLIDING DOORS – EXTEND POWER FROM DEMOLITION.
10. WIRE TO CIRCUITS THAT PREVIOUSLY SERVED CASH REGISTERS.
11. ROOFTOP CONDENSING UNIT 'CU-1' – 208V, 1Ø, 18 MCA, PROVIDE WEATHERPROOF DISCONNECT. WIRE TO PANEL 'L-1', CIRCUIT #15,17. PROVIDE (2)#10, (1)#10 GND.
12. INDOOR SPLIT SYSTEM UNIT 'FCU-1' – 208V, 1Ø, PROVIDE DISCONNECT. POWER WITH 'CU-1'.
13. REPLACE EXISTING DUPLEX RECEPTACLE WITH NEW INCLUDING COVER PLATE.
14. EXTEND BRANCH CIRCUIT WIRING FOR RELOCATED TIME CLOCK.
15. PROVIDE FLUSH MOUNTED INTERCOM / DOOR ENTRY DEVICE BASED ON, AIPHONE 'LEM-1DL', CONNECT TO 120V POWER, PANEL 'L-1', CIRCUIT #6.
16. PROVIDE INTERCOM AND DOOR STRIKE BASED ON, AIPHONE 'LE-SS-1G' & 'EL-9S'. PROVIDE (4) #22 AWG FOR CONTROL CABLING, (2) FOR INTERCOM AND (2) FOR DOOR RELEASE.
17. NEW LOCATION OF IRRIGATION PANEL. SEE DEMOLITION NOTE #11 ON DRAWING ED2.2.
18. COORDINATE WITH BASE SECURITY CONTRACTOR AND GC TO RECONNECT 120V POWER AND INSTALL ASSOCIATED CONDUIT TO SECURITY PEDESTALS. REFER TO EAS SYSTEM ROUGH-IN DETAIL ON DRAWING E7.0.
19. PROVIDE 12"x1/4"x4" COPPER GROUND BAR (ERITECH #TMGB-A12L15PT) ON WALL AT 24" AFF. PROVIDE #6 COPPER CONDUCTOR FROM GROUND BAR TO BUILDING'S MAIN GROUNDING ELECTRODE SYSTEM.

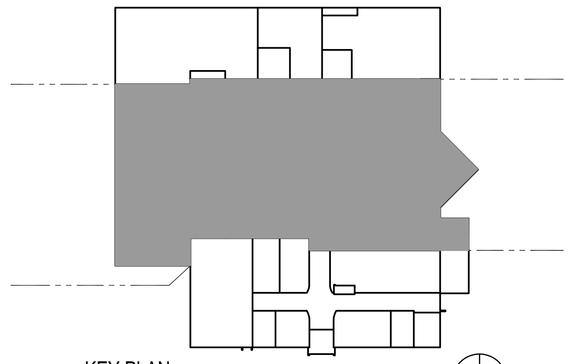

KEY PLAN
SCALE: N.T.S.

TRUE NORTH

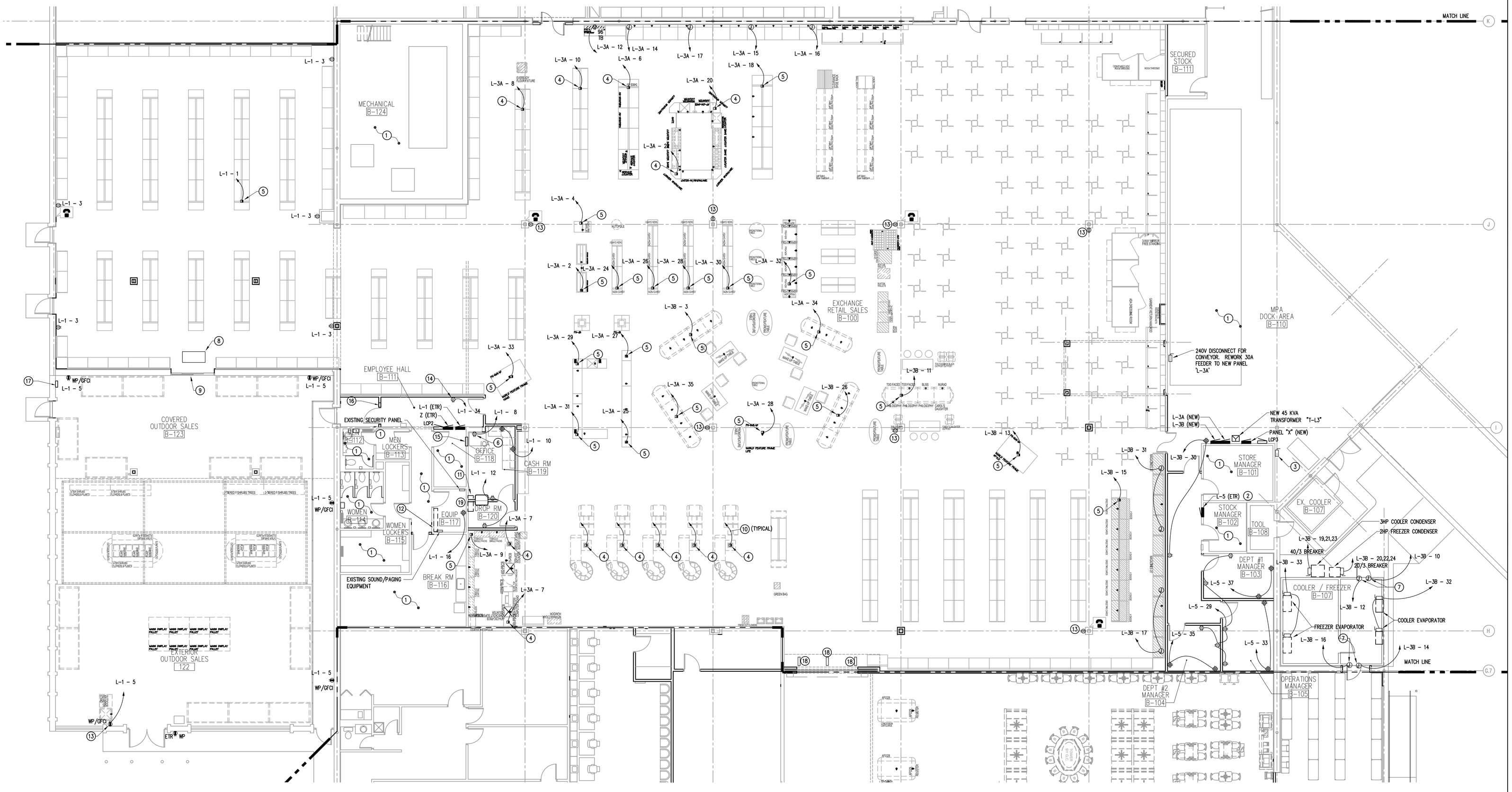

1 / E2.2 RETAIL SALES AREA POWER PLAN
SCALE: 1/8" = 1'-0"

0 1' 2' 4' 8'

TRUE NORTH

DATES AND REVISIONS	
No.	Date/Description
	04.11.12 – BID

EXCHANGE™

RICHARD L. BOWEN + ASSOCIATES INC.
ARCHITECTS • ENGINEERS • CONSTRUCTION MANAGERS
13000 Shaker Boulevard | Cleveland, Ohio 44120
Phone: (216) 491-9300 Fax: (216) 491-9053
www.rlba.com - email@rlba.com

FT. MYER EXCHANGE
JBMHH - MYER
ARLINGTON, VIRGINIA

POWER PLAN (AREA B)

DRAWN BY:	CAR
CHECKED BY:	GSS
RLB NO.:	7800.02

DRAWING NO.
E2.2

P:\7800\7800.02 FT. MYER PX IMAGE UPGRADE CONST. CONTRACT DOCS\ELEC\7800002_E02-02.DWG | PLOTTED 04.27.2012 07:59AM BY CASEY RODDIS

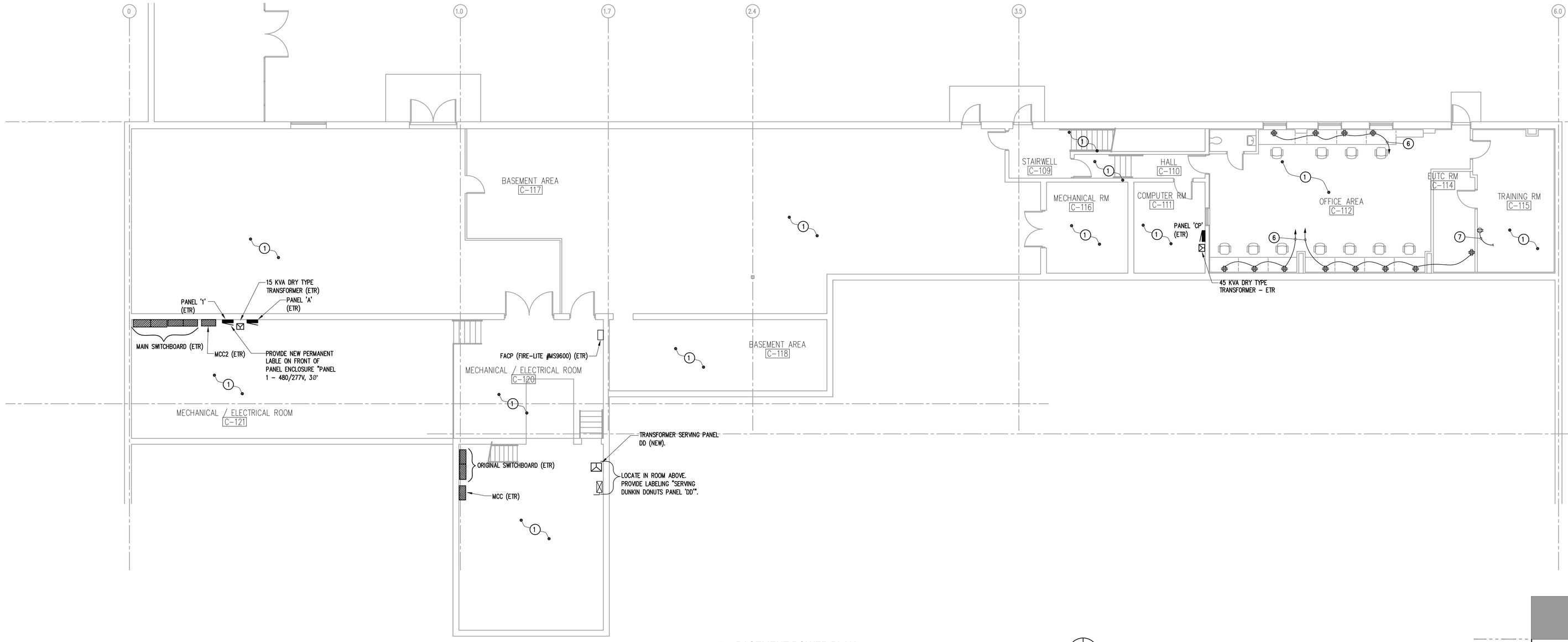

(X) PLAN NOTES:

1. NO NEW WORK IN THIS AREA UNLESS OTHERWISE NOTED.
2. DUPLEX RECEPTACLE MOUNTED IN TOE SPACE ON 12 FT. CENTERS IN AATES FURNISHED CASEWORK. ROUTE ALL WIRING IN CASEWORK TOE SPACE. CASEWORK IS PRE-PUNCHED TO ACCEPT DUPLEX RECEPTACLE.
3. PROVIDE (1) 4-PLEX RECEPTACLE AND (1) DUPLEX RECEPTACLE EACH WITH ITS OWN CIRCUIT. THE 4-PLEX TO BE ON CLEAN POWER FOR CASH REGISTERS. ROUTE CONDUIT THRU CASEWORK KICK SPCAE.
4. DEDICATED NEMA 5-20 RECEPTACLE ON DEDICATED CIRCUIT. MOUNT RECEPTACLE 12" ABOVE CEILING FOR DOOR ALARM AND FIRE SECURITY DEVICES, WITH DEDICATED CIRCUIT.
5. BASE BID: NO NEW WORK. OPTION #2: PERFORM ELECTRICAL WORK AS SHOWN.
6. WIRE TO 120V CIRCUITS IN PANEL 'A' THAT PREVIOUSLY SERVED POWER POLES IN THIS ROOM.
7. WIRE TO NEAREST 120V RECEPTACLE CIRCUIT IN TRAINING ROOM.
8. CEILING EXHAUST FAN 'EF-1' - 120V, 53W. WIRE TO ROOM'S LIGHT FIXTURE SO THAT FAN IS CONTROLLED BY ROOMS OCCUPANCY SENSOR.
9. CEILING EXHAUST FAN 'EF-2' - 120V, 53W. WIRE TO ROOM'S LIGHT FIXTURE SO THAT FAN IS CONTROLLED BY ROOMS OCCUPANCY SENSOR.

2 / E2.3 BASEMENT POWER PLAN
SCALE: 1/8" = 1'-0"

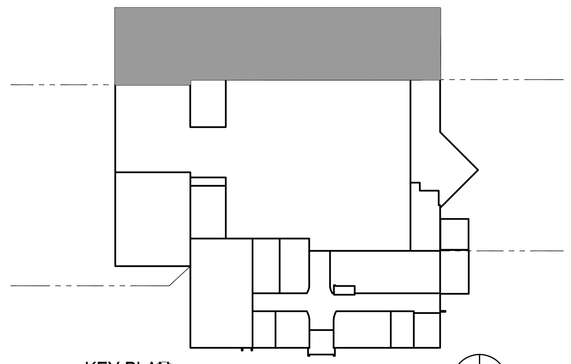

KEY PLAN
SCALE: N.T.S.

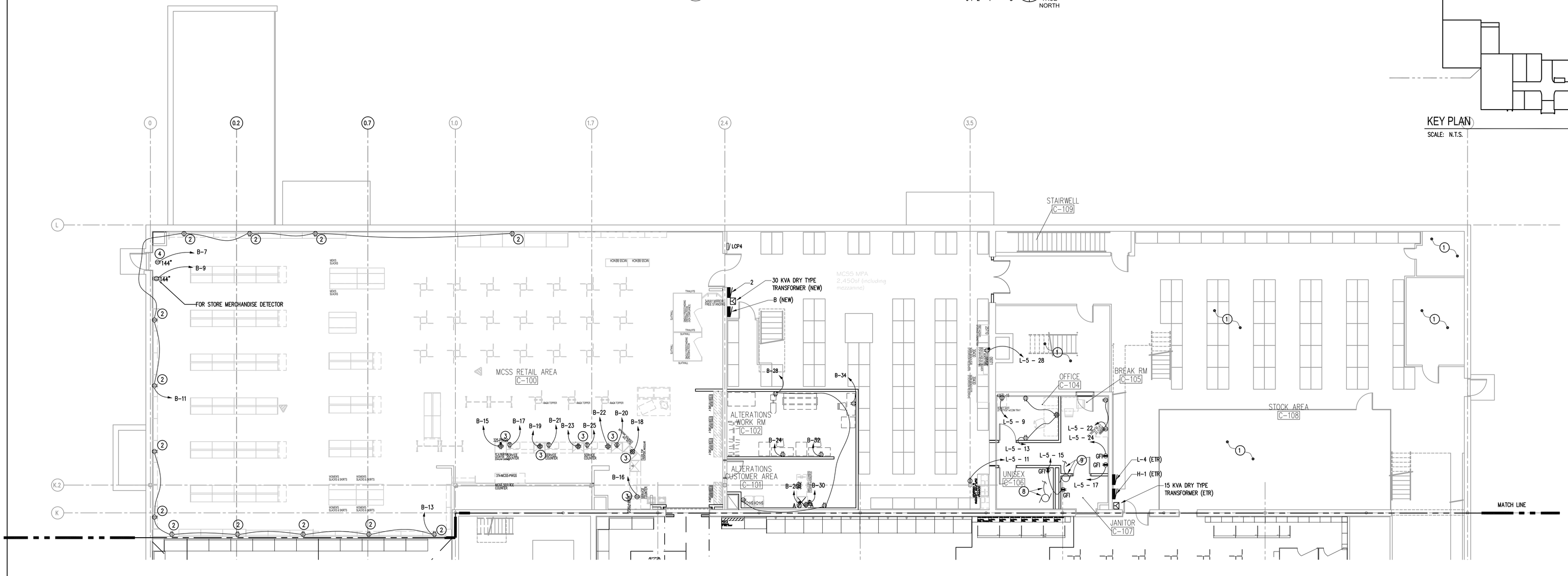

1 / E2.3 MCSS & MPA POWER PLAN - OPTION #2
SCALE: 1/8" = 1'-0"

DATES AND REVISIONS

No.	Date/Description
	04.11.12 - BID

EXCHANGE™

RICHARD L. BOWEN
+ ASSOCIATES INC.
13000 Shaker Boulevard | Cleveland, Ohio 44120
Phone: (216) 491-5300 Fax: (216) 491-8053
www.rlba.com - email@rlba.com

FT. MYER EXCHANGE
JBMHH - MYER
ARLINGTON, VIRGINIA

POWER PLAN (AREA C)

DRAWN BY: CAR
CHECKED BY: GSS
RLB NO.: 7800.02

DRAWING NO.
E2.3

P:\7800\7800.02 FT. MYER PX IMAGE UPGRADE CONST. CONTRACT DOCS\ELEC\7800.02_E02-03.DWG | PLOTTED 04.27.2012 07:59AM BY CASEY ROODS

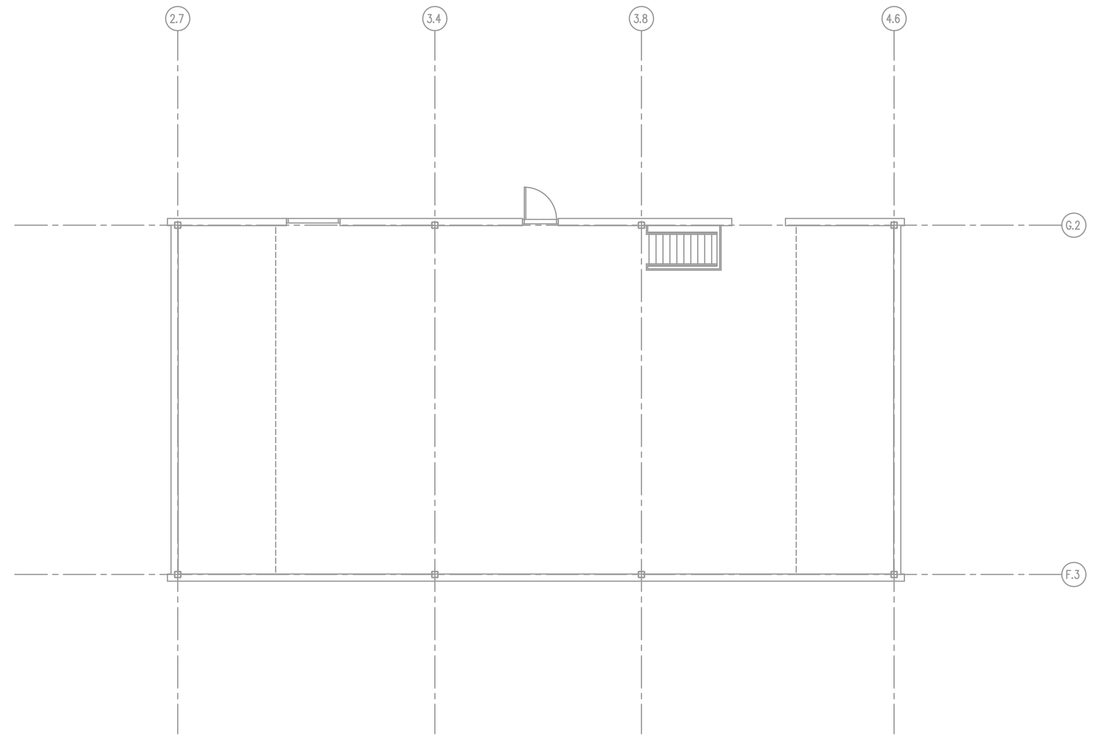

2 / E3.1 MECHANICAL PENTHOUSE COMMUNICATIONS PLAN
SCALE: 1/8" = 1'-0"
0 1' 2' 4' 8'
TRUE NORTH

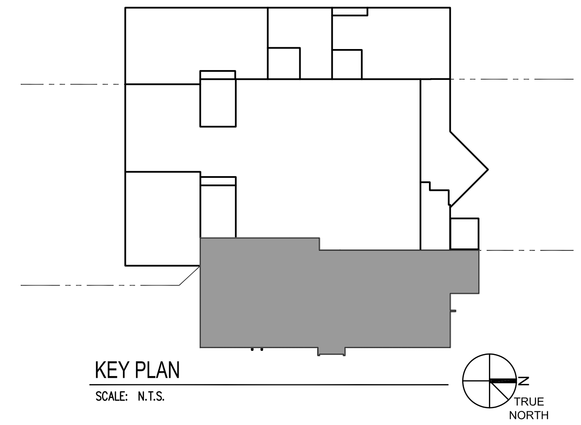

KEY PLAN
SCALE: N.T.S.

(X) KEYED NOTES:

1. DATA OUTLET MOUNTED ABOVE CEILING FOR MONITOR. REFER TO ENLARGED PLAN DRAWING E5.1 FOR FURTHER INFORMATION
2. COVER WALLS WITH 3/4" PLYWOOD (FIRE RATED) FLOOR TO CEILING.
3. RELOCATED SPEAKER, EXTEND SPEAKER WIRING TO NEW LOCATION INDICATED.

COMMUNICATIONS CABLING NOTE

ALL COMMUNICATIONS CABLING SHALL BE TERMINATED AT BOTH ENDS AND PULLED BY AAFES. EC SHALL ROUGH-IN BOXES AT LOCATIONS AS INDICATED. EC SHALL PROVIDE 3/4" CONDUIT FROM BOXES TO ABOVE ACCESSIBLE CEILING GRID.

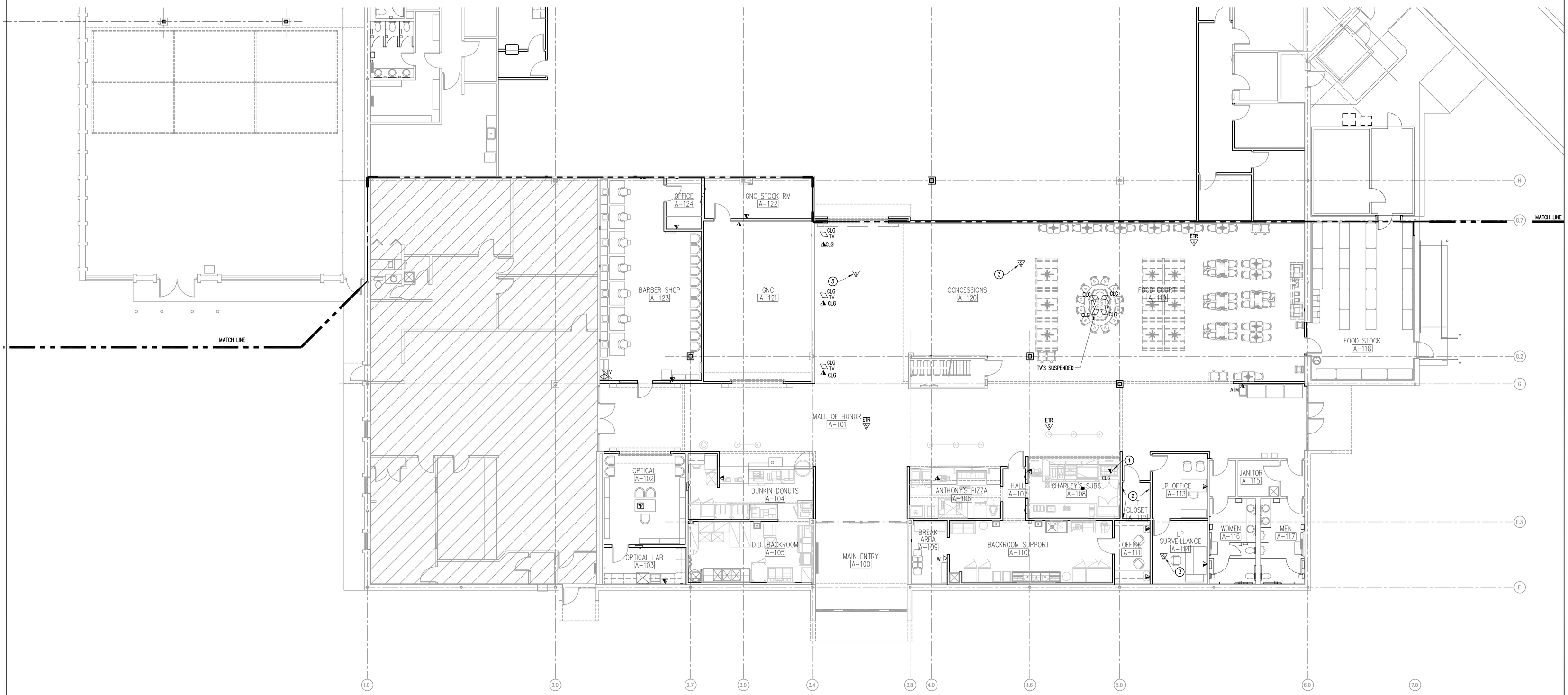

1 / E3.1 MALL & FOOD COURT COMMUNICATIONS PLAN
SCALE: 1/8" = 1'-0"
0 1' 2' 4' 8'
TRUE NORTH

DATES AND REVISIONS	
No.	Date/Description
	04.11.12 – BID

EXCHANGE™

RICHARD L. BOWEN + ASSOCIATES INC.
ARCHITECTS • ENGINEERS • MANAGERS • CONSTRUCTION
13000 Shaker Boulevard | Cleveland, Ohio 44120
Phone: (216) 491-9300 Fax: (216) 491-8053
www.rlba.com - email@rlba.com

FT. MYER EXCHANGE
JBMHH - MYER
ARLINGTON, VIRGINIA

COMMUNICATIONS PLAN (AREA A)

DRAWN BY: CAR
CHECKED BY: GSS
RLB NO.: 7800.02

DRAWING NO.
E3.1

P:\7800\7800.02 FT. MYER PX MAKE UPGRADE CONST. CONTRACT DOCS\ELEC\7800.02_E03-01.DWG | PLOTTED 04.06.2012 10:13AM BY CASEY RODDIS

KEYED NOTES:

1. DATA/POWER POLE WITH 1"C TO ACCESSIBLE CEILING SPACE FOR AF/AV DATA/PHONE CABLES UNLESS NOTED OTHERWISE IN CONTRACT. PROVIDE PULL CORD IN ALL CONDUIT.
2. PROVIDE 4'Wx8'Hx3/4"D PLYWOOD (FIRE RATED).
3. RELOCATED SPEAKER, EXTEND SPEAKER WIRING TO NEW LOCATION INDICATED.
4. PROVIDE NEW SPEAKER TO MATCH NEARBY EXISTING SPEAKERS. PROVIDE WIRING BACK TO SOUND/PAGING HEAD-END EQUIPMENT LOCATED IN EQUIPMENT ROOM B-118.
5. RELOCATED TIME CLOCK.
6. LOCATION OF CALL BOX AND PRICE SCANNER. PROVIDE WALL PHONE OUTLET AT 48" AFF AND A DATA OUTLET AT 144" AFF.
7. COORDINATE WITH SAFE INSTALLER TO PROVIDE CONDUIT. PATH FROM CEILING TO SAFE FOR SECURITY MONITORING.

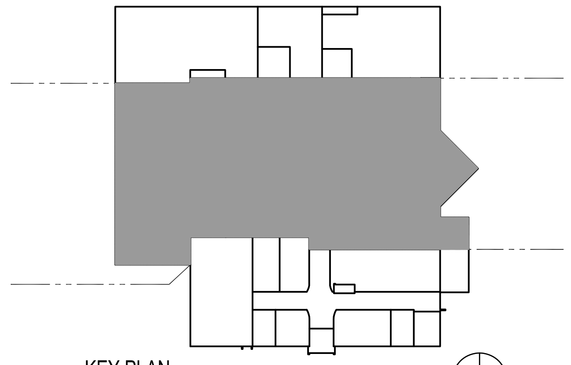

KEY PLAN
SCALE: N.T.S.

TRUE NORTH

COMMUNICATIONS CABLING NOTE

ALL COMMUNICATIONS CABLING SHALL BE TERMINATED AT BOTH ENDS AND PULLED BY AAFES. EC SHALL ROUGH-IN BOXES AT LOCATIONS AS INDICATED. EC SHALL PROVIDE 3/4" CONDUIT FROM BOXES TO ABOVE ACCESSIBLE CEILING GRID.

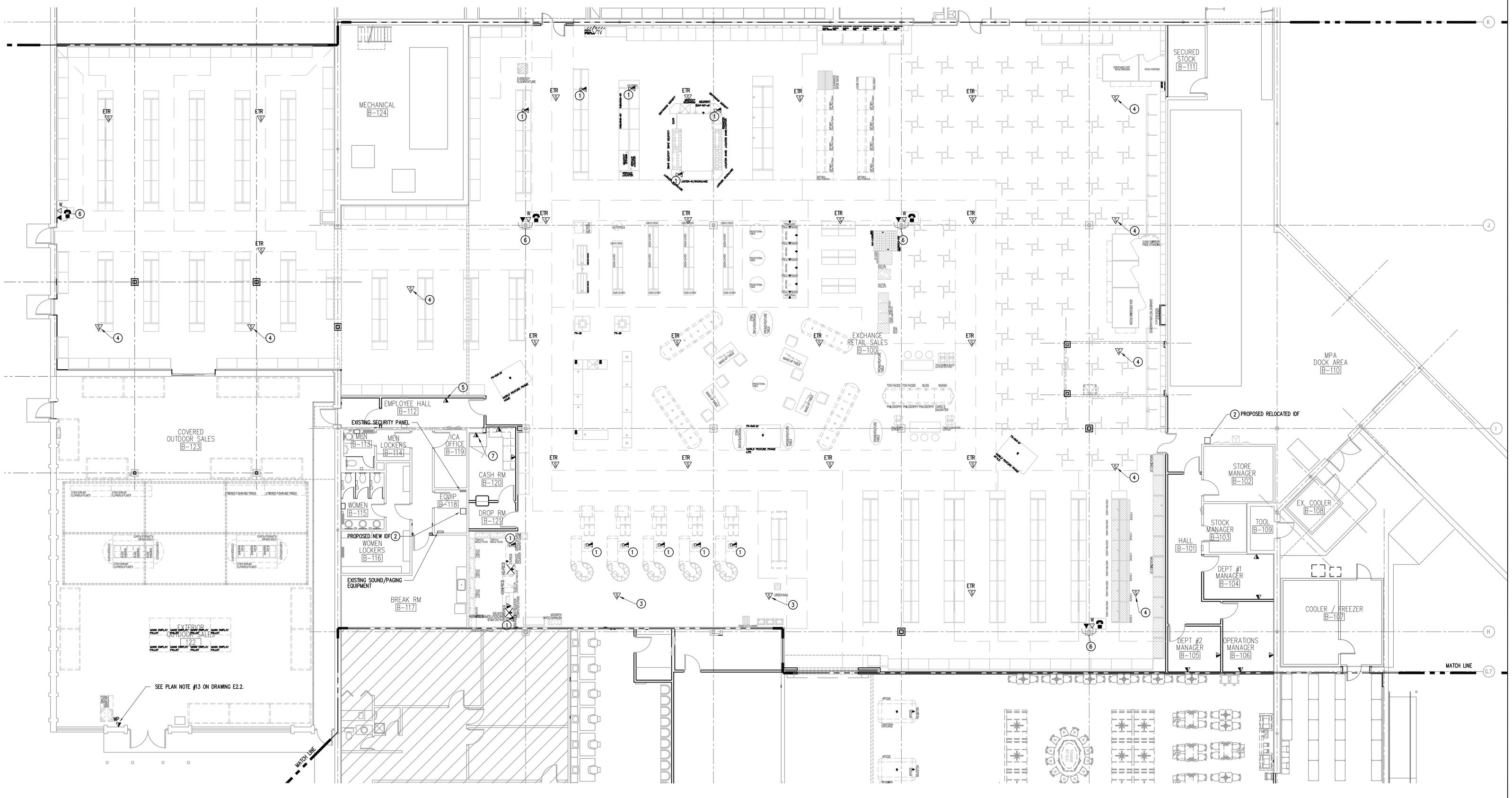

1 / E3.2 RETAIL SALES AREA COMMUNICATIONS PLAN
SCALE: 1/8" = 1'-0"

0 1' 2' 4' 8'

TRUE NORTH

DATES AND REVISIONS	
No.	Date/Description
	04.11.12 – BID

EXCHANGE™

RICHARD L. BOWEN + ASSOCIATES INC.
ARCHITECTS • ENGINEERS • CONSTRUCTION MANAGERS
13000 Shaker Boulevard / Cleveland, Ohio 44120
Phone: (216) 491-9300 Fax: (216) 491-9303
www.rlba.com - email@rlba.com

FT. MYER EXCHANGE
JBMHH - MYER
ARLINGTON, VIRGINIA

COMMUNICATIONS PLAN (AREA B)

DRAWN BY: CAR
CHECKED BY: GSS
RLB NO.: 7800.02

DRAWING NO.
E3.2

P:\7800\7800.02 FT. MYER PX IMAGE UPGRADE CONST. CONTRACT DOCS\ELEC\7800.02_E03-02.DWG | PLOTTED 04.27.2012 08:00AM BY CASEY ROODS

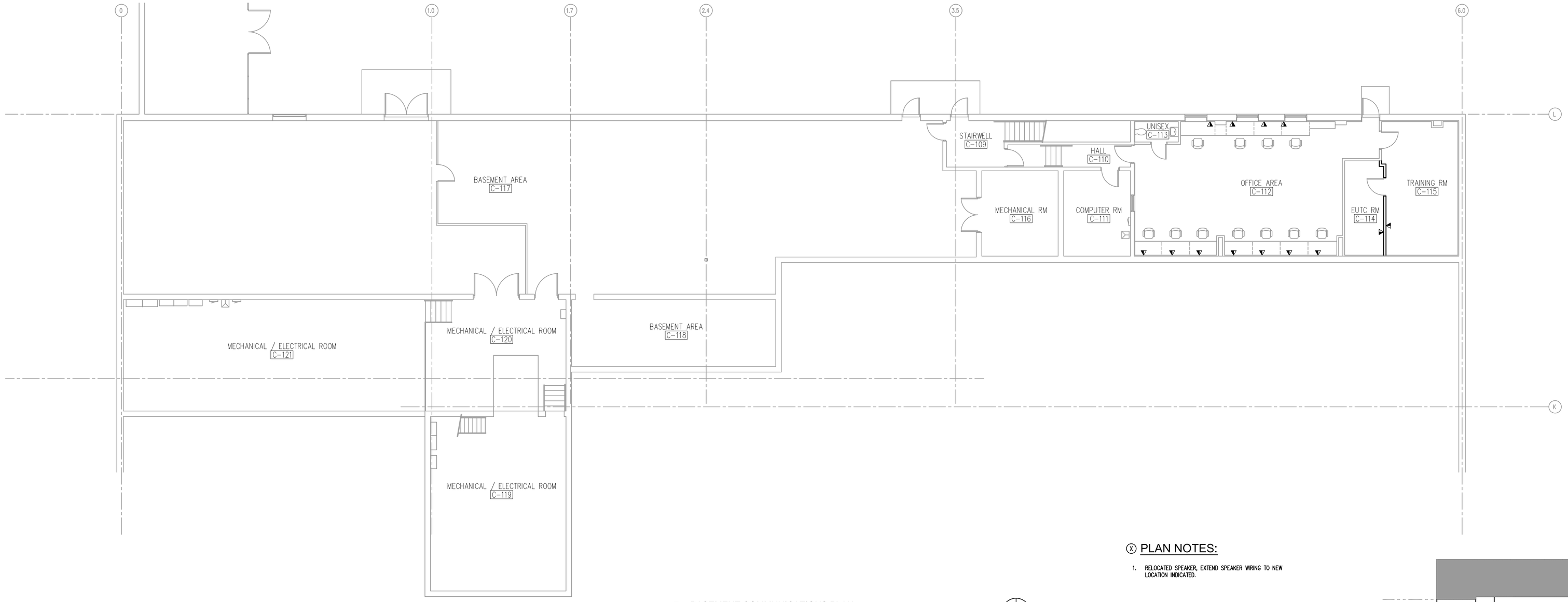

2 E3.3 BASEMENT COMMUNICATIONS PLAN
SCALE: 1/8" = 1'-0"

ⓧ PLAN NOTES:

1. RELOCATED SPEAKER, EXTEND SPEAKER WIRING TO NEW LOCATION INDICATED.

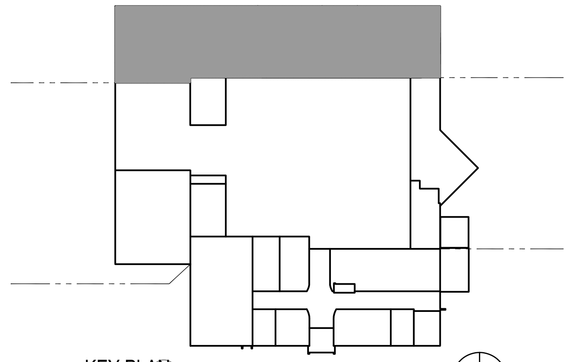

KEY PLAN
SCALE: N.T.S.

COMMUNICATIONS CABLING NOTE

ALL COMMUNICATIONS CABLING SHALL BE TERMINATED AT BOTH ENDS AND PULLED BY AHFES. EC SHALL ROUGH-IN BOXES AT LOCATIONS AS INDICATED. EC SHALL PROVIDE 3/4" CONDUIT FROM BOXES TO ABOVE ACCESSIBLE CEILING GRID.

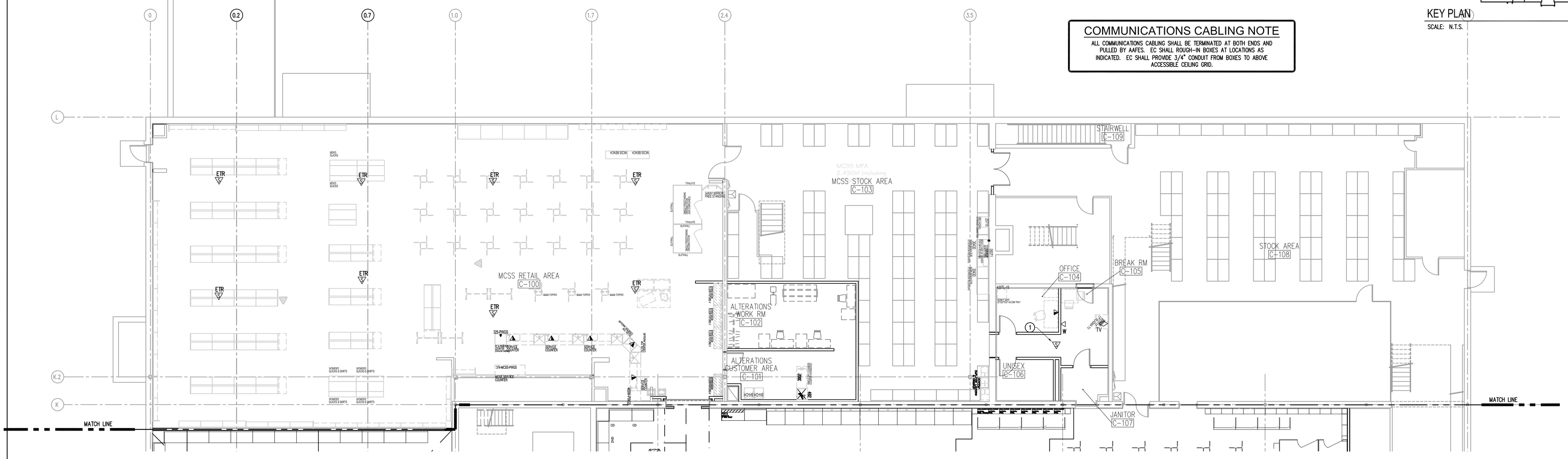

1 E3.3 MCSS & MPA COMMUNICATIONS PLAN - OPTION #2
SCALE: 1/8" = 1'-0"

DATES AND REVISIONS

No.	Date/Description
	04.11.12 – BID

EXCHANGE™

RICHARD L. BOWEN + ASSOCIATES INC.
13000 Shaker Boulevard | Cleveland, Ohio 44120
Phone: (216) 491-5300 Fax: (216) 491-8053
www.rlba.com - email@rlba.com

FT. MYER EXCHANGE
JBMHH - MYER
ARLINGTON, VIRGINIA

COMMUNICATIONS PLAN (AREA C)

DRAWN BY: CAR
CHECKED BY: GSS
RLB NO.: 7800.02

DRAWING NO.
E3.3

P:\7800\7800.02 FT. MYER PX IMAGE UPGRADE CONST. CONTRACT DOCS\ELEC\7800.02_E03-03.DWG | PLOTTED 04.27.2012 08:01AM BY CASEY RODDIS

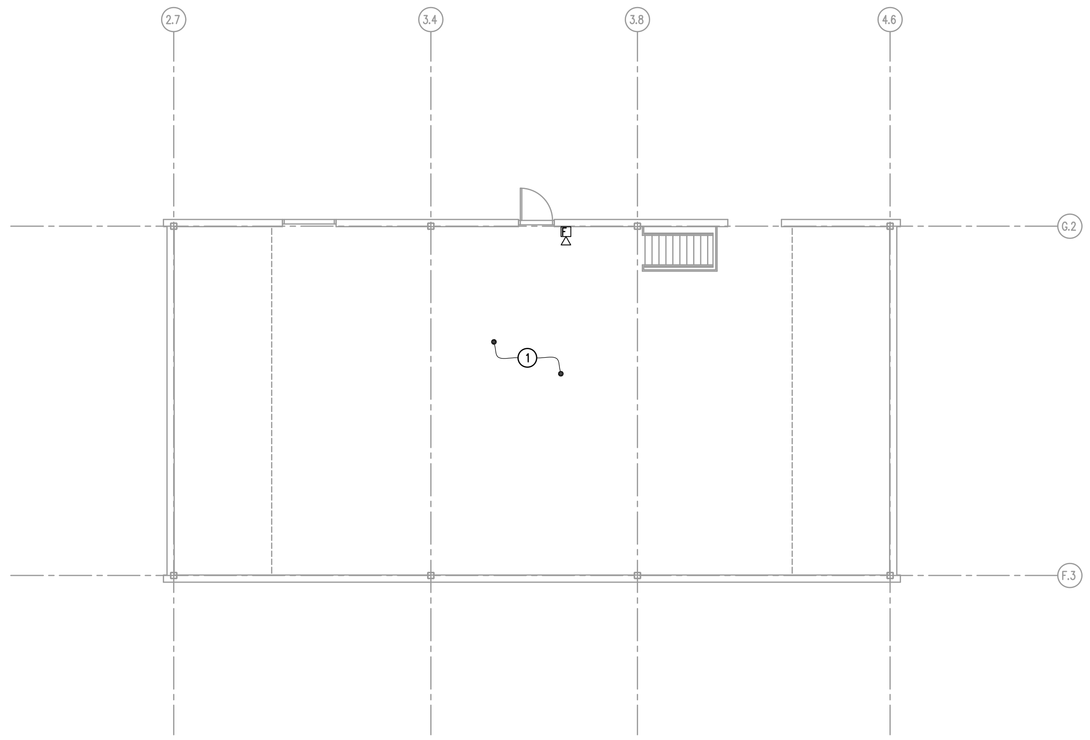

2 E4.1 MECHANICAL PENTHOUSE FIRE ALARM PLAN
SCALE: 1/8" = 1'-0"
0 1' 2' 4' 8'
N TRUE NORTH

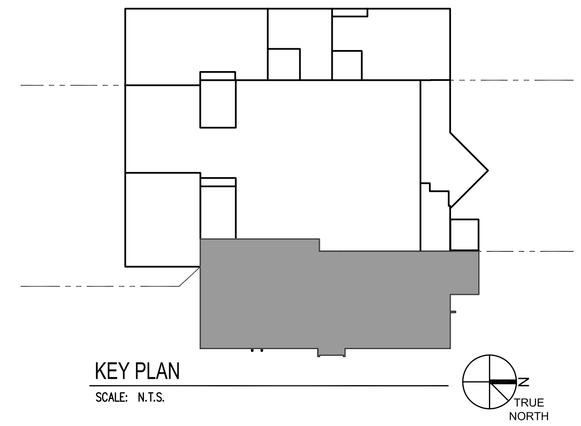

ⓧ PLAN NOTES:

1. UNLESS OTHERWISE NOTED, NO NEW WORK IN THIS AREA/ROOM.
2. PROVIDE POWER SUPPLY FOR FIRE ALARM NOTIFICATION DEVICES IN AREA A.

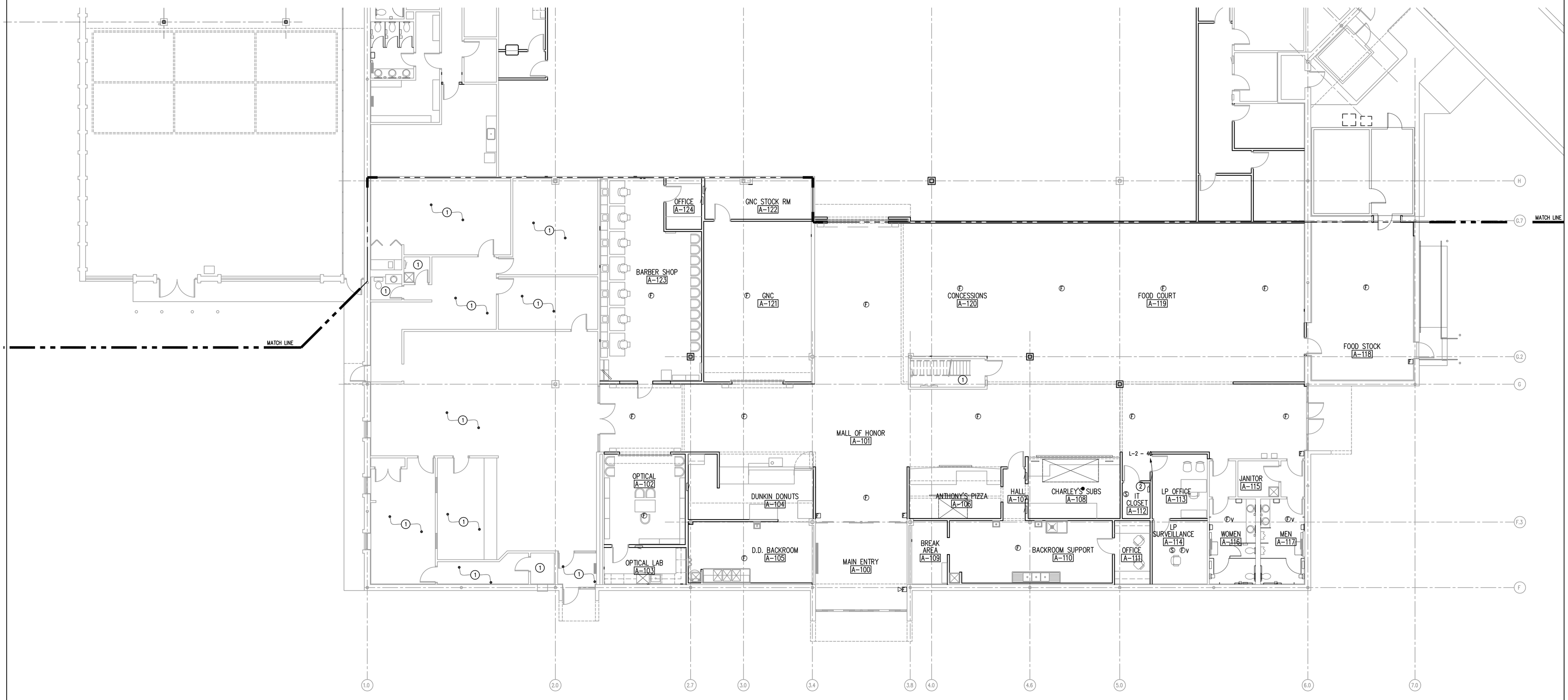

1 E4.1 MALL & FOOD COURT FIRE ALARM PLAN
SCALE: 1/8" = 1'-0"
0 1' 2' 4' 8'
N TRUE NORTH

DATES AND REVISIONS	
No.	Date/Description
	04.11.12 – BID

EXCHANGE™

RICHARD L. BOWEN + ASSOCIATES INC.
ARCHITECTS • ENGINEERS • CONSTRUCTION MANAGERS
13000 Shaker Boulevard / Cleveland, Ohio 44120
Phone: (216) 491-9300 Fax: (216) 491-9053
www.rlba.com - email@rlba.com

FT. MYER EXCHANGE
JBMHH - MYER
ARLINGTON, VIRGINIA

FIRE ALARM PLAN (AREA A)

DRAWN BY: CAR
CHECKED BY: GSS
RLB NO.: 7800.02

DRAWING NO.
E4.1

P:\7800\7800.02 FT. MYER PX IMAGE UPGRADE CONST. CONTRACT DOCS\ELEC\7800002_E04-01.DWG | PLOTTED 04.27.2012 08:02AM BY CASEY RODDIS

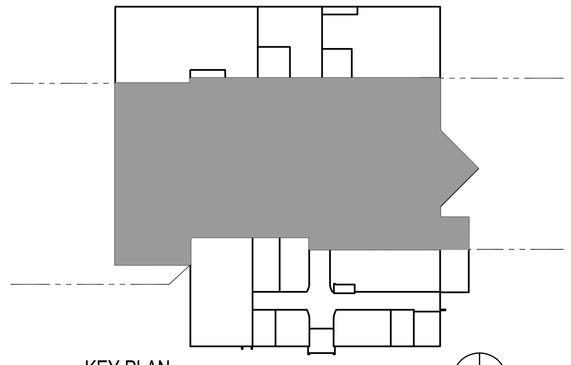

KEY PLAN
SCALE: N.T.S.

TRUE NORTH

ⓧ PLAN NOTES:

1. UNLESS OTHERWISE NOTED, NO NEW WORK IN THIS ROOM/AREA.
2. PROVIDE NEW POWER SUPPLY(IES) FOR FIRE ALARM NOTIFICATION DEVICES IN AREA B.

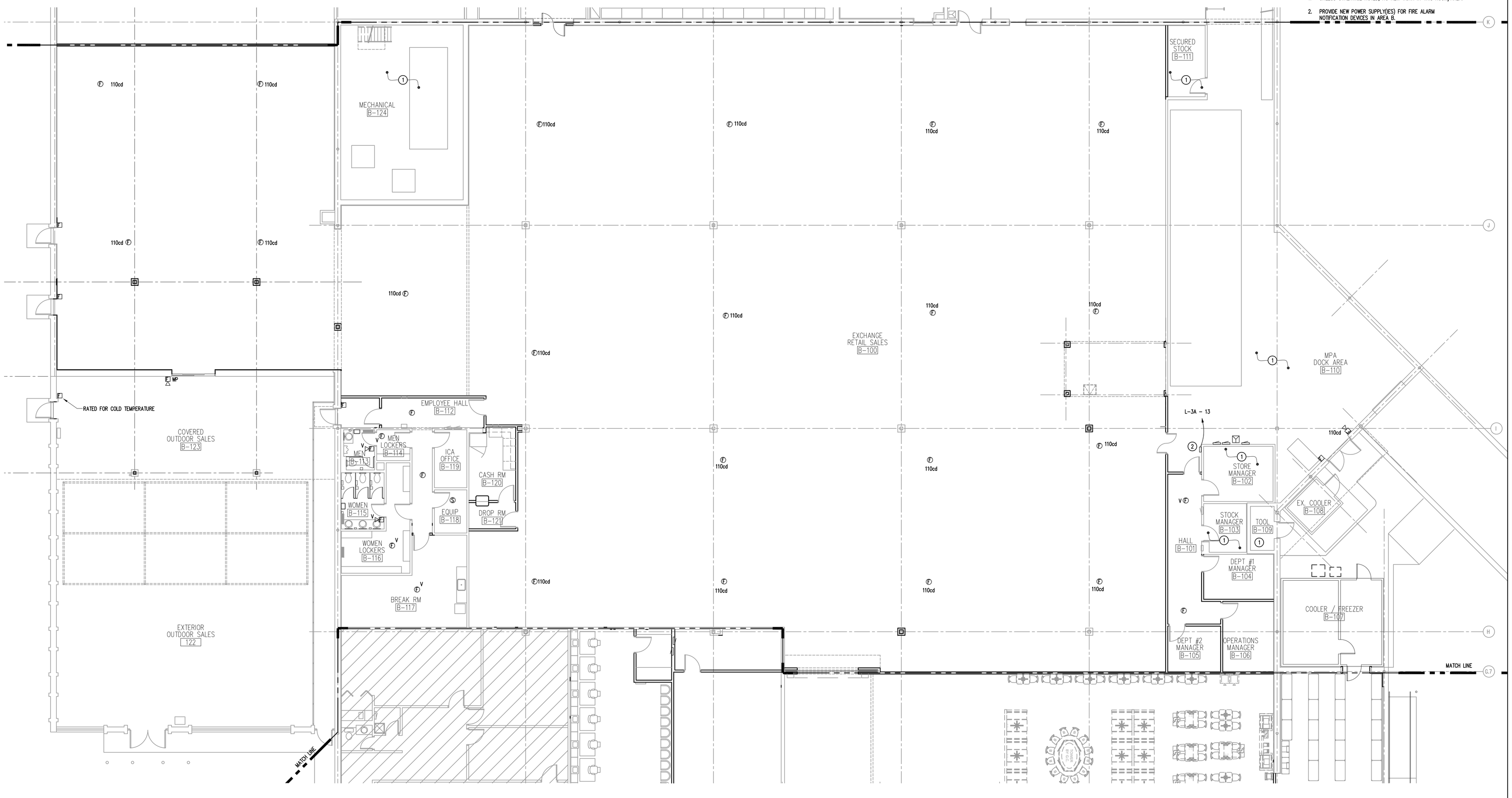

1 / E4.2 RETAIL SALES AREA FIRE ALARM PLAN
SCALE: 1/8" = 1'-0"

0 1' 2' 4' 8'

TRUE NORTH

DATES AND REVISIONS	
No.	Date/Description
	04.11.12 – BID

EXCHANGE™

RICHARD L. BOWEN + ASSOCIATES INC.
ARCHITECTS • ENGINEERS • CONSTRUCTION MANAGERS
13000 Shaker Boulevard / Cleveland, Ohio 44120
Phone: (216) 491-9300 Fax: (216) 491-9053
www.rlba.com - email@rlba.com

FT. MYER EXCHANGE
JBMHH - MYER
ARLINGTON, VIRGINIA

FIRE ALARM PLAN (AREA B)

DRAWN BY: CAR
CHECKED BY: GSS
RLB NO.: 7800.02

DRAWING NO.
E4.2

P:\7800\7800.02 FT. MYER PX IMAGE UPGRADE CONST. CONTRACT DOCS\ELEC\7800.02_E04-02.DWG | PLOTTED 04.27.2012 08:02AM BY CASEY ROORS

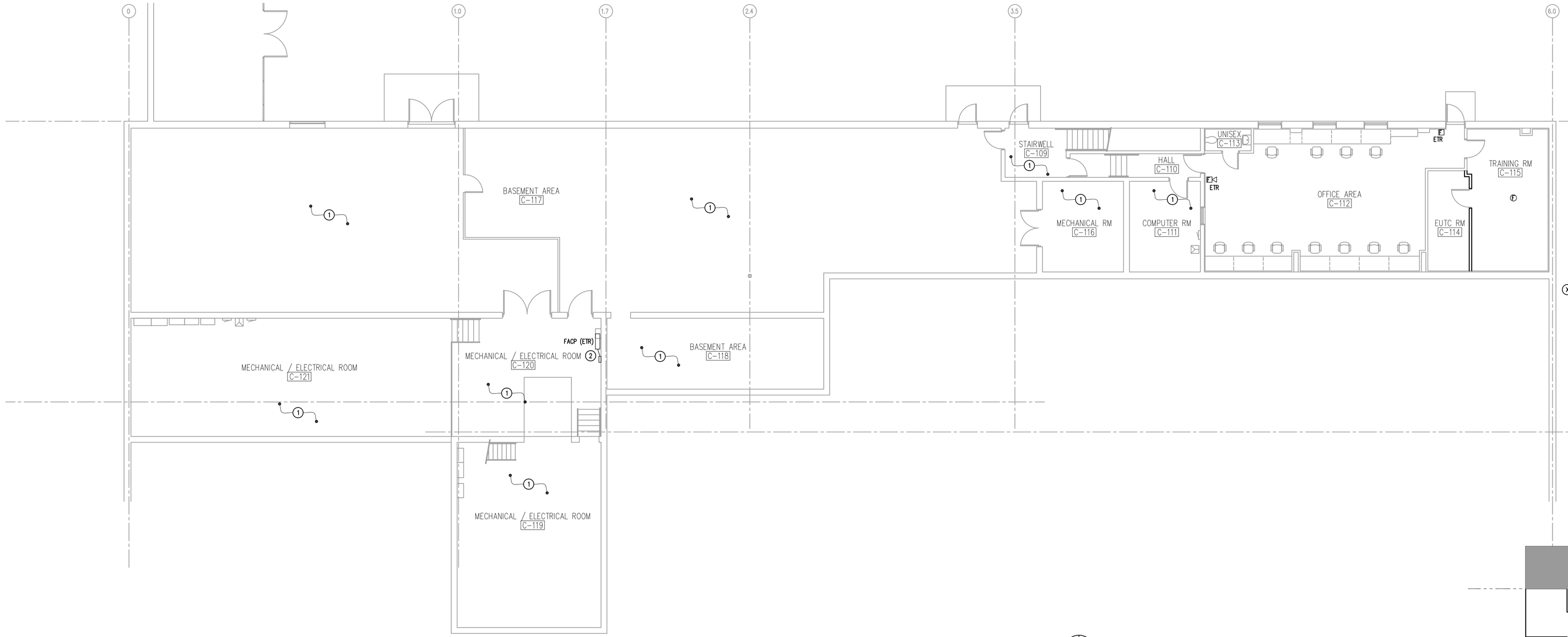

2 BASEMENT FIRE ALARM PLAN
E4.3 SCALE: 1/8" = 1'-0"

0 1' 2' 4' 8'

TRUE NORTH

PLAN NOTES:

1. UNLESS OTHERWISE NOTED, NO NEW WORK IN THIS ROOM/AREA.
2. PROVIDE POWER SUPPLY FOR FIRE ALARM NOTIFICATION DEVICES FOR AREA C. EXTEND 120V POWER FROM EXISTING FACP.

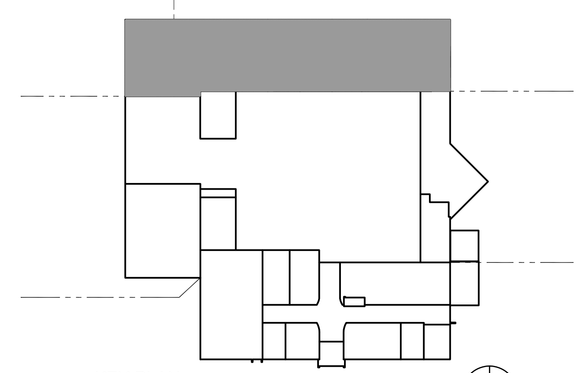

KEY PLAN
SCALE: N.T.S.

TRUE NORTH

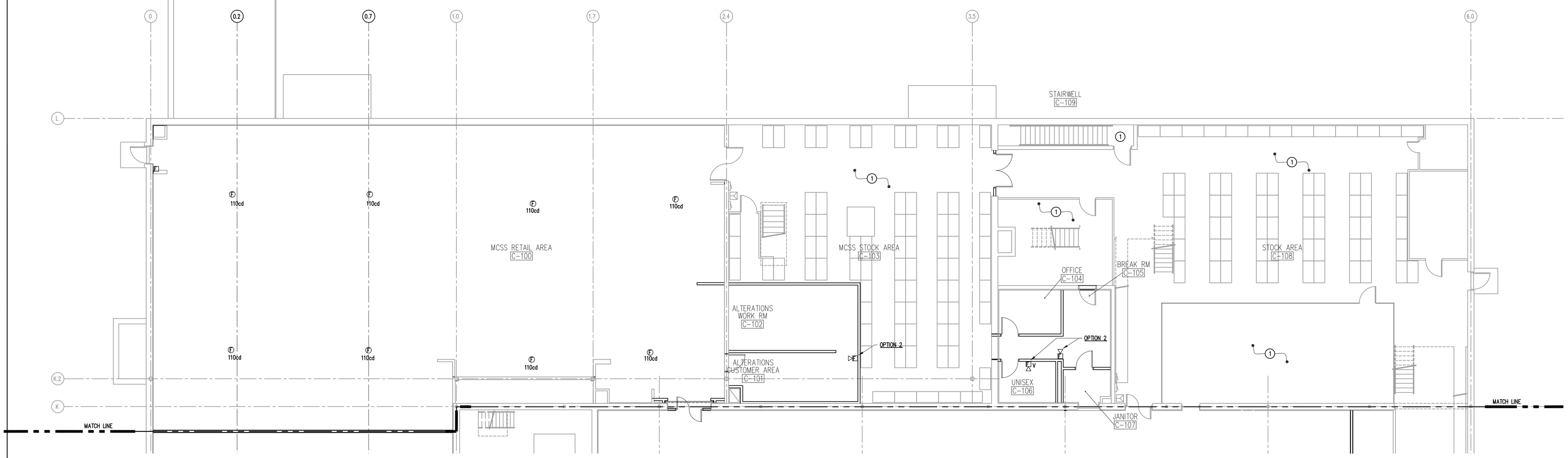

1 MCSS & MPA FIRE ALARM PLAN
E4.3 SCALE: 1/8" = 1'-0"

0 1' 2' 4' 8'

TRUE NORTH

DATES AND REVISIONS	
No.	Date/Description
	04.11.12 – BID

EXCHANGE™

RICHARD L. BOWEN + ASSOCIATES INC.
13000 Shaker Boulevard | Cleveland, Ohio 44120
Phone: (216) 491-9300 Fax: (216) 491-8053
www.rlba.com - email@rlba.com

FT. MYER EXCHANGE
JBMHH - MYER
ARLINGTON, VIRGINIA

FIRE ALARM PLAN (AREA C)

DRAWN BY: CAR
CHECKED BY: GSS
RLB NO.: 7800.02

DRAWING NO.
E4.3

P:\7800\7800.02 FT. MYER PX IMAGE UPGRADE CONST. CONTRACT DOCS\ELEC\7800002_E04-03.DWG | PLOTTED 04.27.2012 08:03AM BY CASEY ROODS

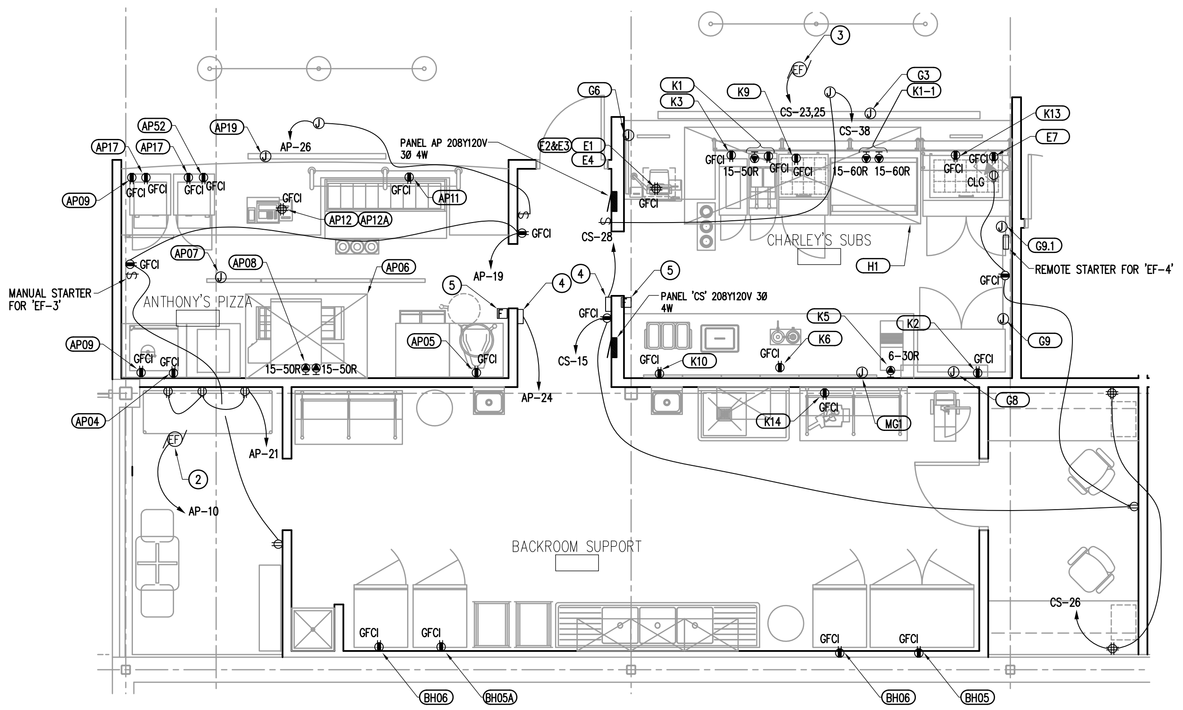

1 E5.1 ENLARGED CHARLEY'S SUBS & ANTHONY'S PIZZA ELECTRICAL PLAN
SCALE: 1/4" = 1'-0"

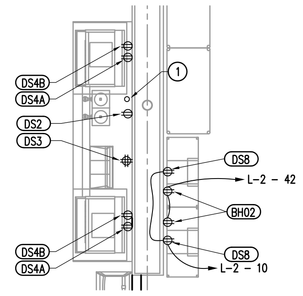

2 E5.1 ENLARGED DRINK STATION - ELECTRICAL PLAN
SCALE: 1/4" = 1'-0"

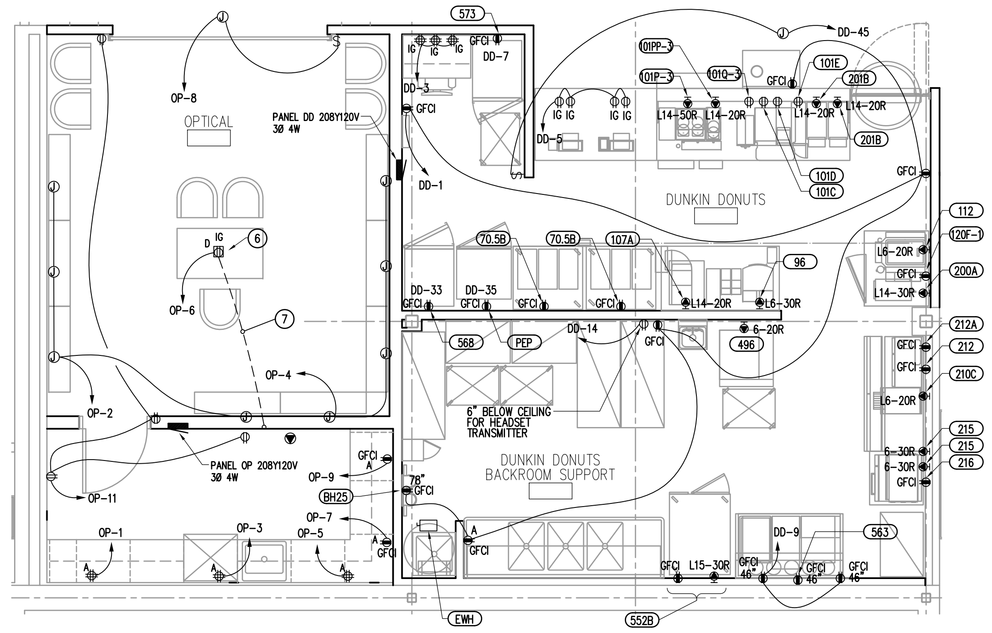

3 E5.1 ENLARGED OPTICAL AND DUNKIN DONUTS ELECTRICAL PLAN
SCALE: 1/4" = 1'-0"

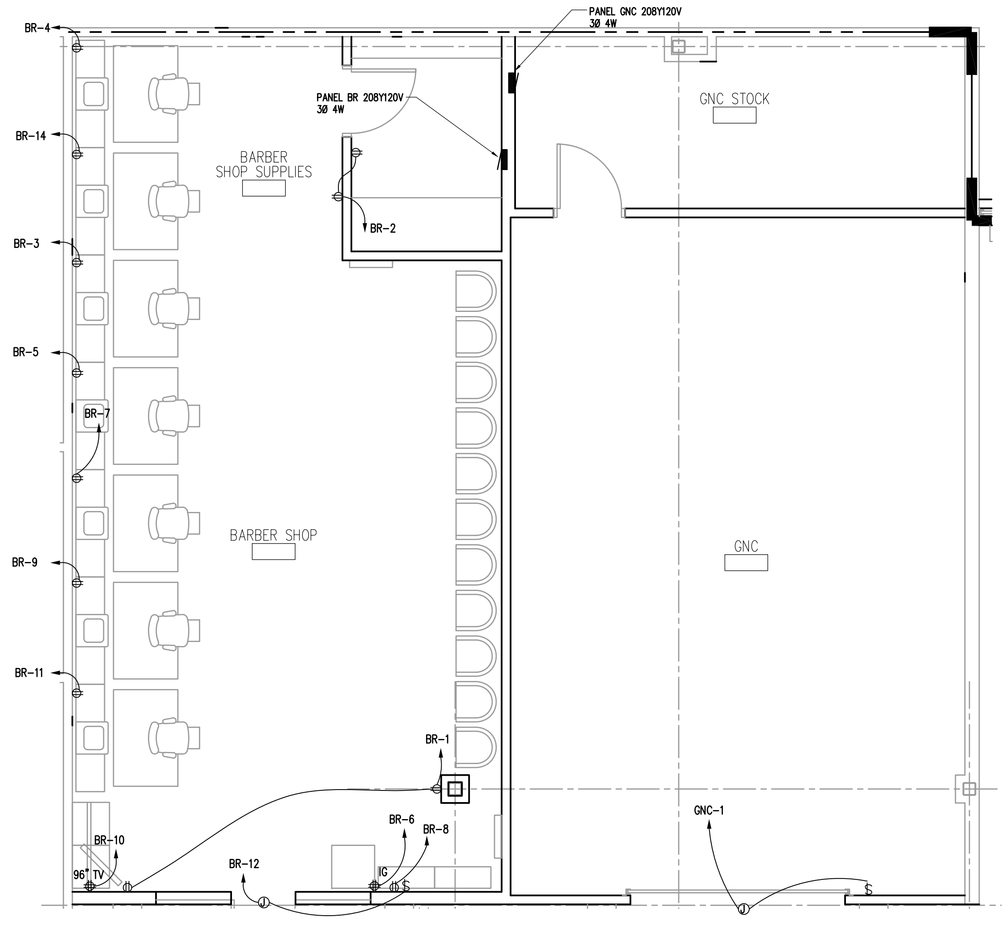

4 E5.1 ENLARGED BARBER SHOP AND GNC ELECTRICAL PLAN
SCALE: 1/4" = 1'-0"

ANTHONY'S PIZZA ELECTRICAL EQUIPMENT SCHEDULE

ITEM	QUAN.	DESCRIPTION	WATTS	VOLTS	PH	LOAD HP	LOAD AMPS	DISCONNECT	COMMENTS	PANEL – CB #	CB SIZE	WIRING
AP04	1	FOOD WARMER	500	120	1	–	4.2	6' INTEGRAL 5-15P CORD & PLUG	--	AP-1	20/1	(2) #12, (1) #12 GND
AP05	1	PIZZA DOUGH PRESS AUTOMATIC	1400	120	1	–	11.7	CORD & PLUG	--	AP-8	20/1	(2) #12, (1) #12 GND
AP06	1	EXHAUST HOOD AND LIGHTS	100	120	1	–	–	–	SEE NOTE 2	AP-22	20/1	(2) #12, (1) #12 GND
AP07	1	DIGITAL MENU BOARD	1200	120	–	–	10.0	CORD & PLUG	REQUIRES DATA CONNECTION	AP-12	20/1	(2) #12, (1) #12 GND
AP08	1	OVEN CONVEYOR – DOUBLE STACKED	(2)14,400	208	3	–	40.0	(2) INTEGRAL NEMA 15-50P CORD & PLUG	REQUIRES 2 CONNECTIONS	AP-13,15,17 AP-14,16,18	50/3 50/3	(3) #8, (1) #10 GND (3) #8, (1) #10 GND
AP09	2	UNDERCOUNTER REFRIGERATOR	420	120	1	–	3.5	8' INTEGRAL NEMA 5-15P CORD & PLUG	--	AP-3 AP-5	20/1 20/1	(2) #12, (1) #12 GND (2) #12, (1) #12 GND
AP11	1	PIZZA MAKE-UP TABLE	1080	120	1	–	9.0	NEMA 5-15P CORD & PLUG	--	AP-6	20/1	(2) #12, (1) #12 GND
AP12	1	P.O.S. CASH REGISTER W/DRAWER	240	120	1	–	2.0	CORD & PLUG	REQUIRES DATA CONNECTION	AP-4	20/1	(2) #12, (1) #12 GND
AP12A	1	RECEIPT PRINTER	216	120	1	–	1.8	CORD & PLUG	--	AP-4	20/1	(2) #12, (1) #12 GND
AP17	2	DISPLAY CASE HEATED	1476	120	1	–	12.3	INTEGRAL 5-15P CORD & PLUG	--	AP-7 AP-9	20/1 20/1	(2) #12, (1) #12 GND (2) #12, (1) #12 GND
AP19	1	ACTIVITY SIGN	–	120	1	–	–	–	SEE NOTE 1	AP-2	20/1	(2) #12, (1) #12 GND
AP52	1	HOLDING CABINET DRAWER TYPE	1800	120	1	–	15.0	8' INTEGRAL 5-15P CORD & PLUG	--	AP-11	20/1	(2) #12, (1) #12 GND

CHARLEY'S SUBS ELECTRICAL EQUIPMENT SCHEDULE

ITEM	QUAN.	DESCRIPTION	WATTS	VOLTS	PH	LOAD HP	LOAD AMPS	DISCONNECT	COMMENTS	PANEL – CB #	CB SIZE	WIRING
E1	1	POS CASH REGISTER W/ DRAWER	240	120	1	–	2.0	CORD & PLUG	REQUIRES DATA CONNECTION	CS-2	20/1	(2) #12, (1) #12 GND
E2&E3	1	GOOSENECK MICROPHONE & 40 WATT AMPLIFIER	240	120	1	–	2.0	CORD & PLUG	--	CS-2	20/1	(2) #12, (1) #12 GND
E4	1	RECEIPT PRINTER	200	120	1	–	1.7	CORD & PLUG	--	CS-2	20/1	(2) #12, (1) #12 GND
E7	1	MONITOR	300	120	1	–	2.5	CORD & PLUG	--	CS-2	20/1	(2) #12, (1) #12 GND
G3	1	CONCEPT SIGN – LOGO & LETTERS	300	120	1	–	2.5	–	SEE NOTE 1	CS-4	20/1	(2) #12, (1) #12 GND
G6	1	NEON PHILLY CHEESESTEAK SIGN	–	120	1	–	–	–	SEE NOTE 1	CS-6	20/1	(2) #12, (1) #12 GND
G8	1	OVAL FRESH GRILLED LIGHT BOX	–	120	1	–	–	–	SEE NOTE 1	CS-9	20/1	(2) #12, (1) #12 GND
G9	1	48" x 36" LIGHT BOX	–	120	1	–	–	–	SEE NOTE 1	CS-11	20/1	(2) #12, (1) #12 GND
G9.1	1	31" x 36" LED LIGHT BOX	–	120	1	–	–	–	SEE NOTE 1	CS-17	20/1	(2) #12, (1) #12 GND
H1	1	EXHAUST HOOD W/ LED LIGHT STRIPS	100	120	1	–	–	–	SEE NOTE 2	CS-27	20/2	(2) #12, (1) #12 GND
K1	1	ELECTRIC FRYER	14,000	208	3	–	39.0	102" INTEGRAL NEMA 15-50P CORD & PLUG	REQUIRES 120V NEMA 5-20R FOR ACCESSORIES	CS-32,34,36 CS-8	50/3 20/1	(3) #8, (1) #10 GND (2) #12, (1) #12 GND
K1-1	1	GAS GRIDDLE	(2)11,400	(2)208	3	–	1.0	(2) 6' INTEGRAL 15-60P CORD & PLUG	–	CS-31,33,35 CS-37,39,41	40/3 40/3	(3) #8, (1) #10 GND (3) #8, (1) #10 GND
K2	1	REFRIGERATED WORK TOP TABLE	840	120	1	–	7.0	7' INTEGRAL NEMA 5-15P CORD & PLUG	–	CS-5	20/1	(2) #12, (1) #12 GND
K3	1	FOOD WARMER AND DUMP STATION	840	120	1	–	6.9	6' INTEGRAL CORD & PLUG	–	CS-12	20/1	(2) #12, (1) #12 GND
K5	1	TOASTER CONVEYOR	4659	208	1	–	22.4	INTEGRAL NEMA 6-30P CORD & PLUG	–	CS-14,16	30/2	(2) #10, (1) #10 GND
K6	1	HOT TOPPING	1000	120	1	–	8.3	INTEGRAL NEMA 5-15P CORD & PLUG	–	CS-3	20/1	(2) #12, (1) #12 GND
K9	1	MEGA TOP SANDWICH / SALAD UNIT	552	120	1	–	4.6	7' INTEGRAL NEMA 5-15P CORD & PLUG	–	CS-10	20/1	(2) #12, (1) #12 GND
K10	1	BEVERAGE DISPENSER	732	120	1	–	6.1	CORD & PLUG	–	CS-13	20/1	(2) #12, (1) #12 GND
K13	1	MEGA TOP SANDWICH/SALAD UNIT	1032	120	1	–	8.6	7' INTEGRAL NEMA 5-15P CORD & PLUG	–	CS-19	20/1	(2) #12, (1) #12 GND
K14	1	ELECTRIC FOOD PROCESSOR	1680	120	1	–	14.0	CORD & PLUG	–	CS-1	20/1	(2) #12, (1) #12 GND
MG1	1	6 PANEL MENU BOARD	60	120	1	–	0.5	--	SEE NOTE 1	CS-7	20/1	(2) #12, (1) #12 GND

DUNKIN DONUTS ELECTRICAL EQUIPMENT SCHEDULE

ITEM	QUAN.	DESCRIPTION	WATTS	VOLTS	PH	LOAD HP	LOAD AMPS	DISCONNECT	COMMENTS	PANEL – CB #	CB SIZE	WIRING
70.5	2	BAKERY DISPLAY RACK (18 BASKETS)	240	120	1	–	–	INTEGRAL CORD AND PLUG	--	DD-2 DD-4	20/1	(2) #12, (1) #12 GND
96	1	ESPRESSO MACHINE	4160	208	1	–	–	INTEGRAL L6-30P PLUG AND CORD	PROVIDE L6-30R RECEPTACLE	DD-10,12	30/2	(2) #10, (1) #10 GND
101C	1	DAIRY DISPENSER	240	120	1	–	2.0	CONFIRM IF CORD & PLUG SUPPLIED W/ UNIT	CONFIRM RECPT. W/ EQUIP.	DD-21	20/1	(2) #12, (1) #12 GND
101D	1	SURE SHOT SUGAR DISPENSER	480	120	1	–	4.0	CONFIRM IF CORD & PLUG SUPPLIED W/ UNIT	CONFIRM RECPT. W/ EQUIP.	DD-21	20/1	(2) #10, (1) #10 GND
101E	1	FLAVOR DISPENSER	120	120	1	–	1.0	CONFIRM IF CORD & PLUG SUPPLIED W/ UNIT	CONFIRM RECPT. W/ EQUIP.	DD-21	20/1	(2) #12, (1) #12 GND
101P-3	1	AXIOM TWIN COFFEE BREWER	6157	120/208	1	–	29.6	BUNN PROVIDED CORD & PLUG INSTALLED BY GC	PROVIDE 14-50R OR L14-50R. VERIFY WITH EQUIP.	DD-11,13	40/2	(3) #8, (1) #8 GND
101PP-3	1	AXIOM SINGLE COFFEE BREWER	3474	120/208	1	–	16.7	BUNN PROVIDED CORD & PLUG INSTALLED BY GC	PROVIDE 14-20R OR L14-20R. VERIFY WITH EQUIP.	DD-15,17	20/2	(3) #12, (1) #12 GND
101Q-3	1	MULTI HOPPER GRINDER AND STORAGE SYSTEM	1320	120	1	–	11.0	BUNN PROVIDED 5-15P CORD & PLUG INSTALLED BY GC	--	DD-19	20/1	(2) #12, (1) #12 GND
107A	1	DUNKACCINO MACHINE	3328	120/208	1	–	16.0	BUNN PROVIDED CORD & PLUG INSTALLED BY GC	PROVIDE 14-20R OR L14-20R. VERIFY WITH EQUIP.	DD-6,8	20/2	(3) #12, (1) #12 GND
112	1	COOLATTA MACHINE	3328	208	1	–	16.0	CONFIRM IF CORD & PLUG SUPPLIED W/ UNIT	PROVIDE L6-20R RECEPTACLE	DD-23,25	20/2	(2) #12, (1) #12 GND
120F-1	1	UNDERCOUNTER REFRIGERATOR	600	120	1	–	5.0	INTEGRAL 6' CORD & PLUG	--	DD-27	20/1	(2) #12, (1) #12 GND
200A	1	ICED COFFEE BREWER IC3DD	4098	120/208	1	–	19.7	BUNN PROVIDED CORD & PLUG INSTALLED BY GC	PROVIDE 14-30R OR L14-30R. VERIFY WITH EQUIP.	DD-29,31	30/2	(3) #10, (1) #10 GND
201B	2	ICED COFFEE BREWER IC3DD	4098	120/208	1	–	19.7	BUNN PROVIDED CORD & PLUG INSTALLED BY GC	PROVIDE 14-30R OR L14-30R. VERIFY WITH EQUIP.	DD-40,42 DD-44,46	30/2	(3) #10, (1) #10 GND (3) #10, (1) #10 GND
210C	1	BAGEL TOASTER	3286	208	1	–	15.8	CONFIRM IF CORD & PLUG SUPPLIED W/ UNIT	PROVIDE L6-20R VERIFY WITH EQUIP.	DD-20,22	20/2	(2) #12, (1) #12 GND
212	1	REFRIGERATED SANDWICH UNIT	1440	120	1	–	12.0	CONFIRM IF CORD & PLUG SUPPLIED W/ UNIT	--	DD-18	20/1	(2) #12, (1) #12 GND
212A	1	TWO-TIER MODULAR HOLDING CABINET	1200	120	1	–	10.0	CONFIRM IF CORD & PLUG SUPPLIED W/ UNIT	--	DD-16	20/1	(2) #12, (1) #12 GND
215	2	TORNADO OVEN W/ STONE, PEEL, & 2 TRAYS	5990	208	1	–	28.8	CONFIRM IF CORD & PLUG SUPPLIED W/ UNIT	PROVIDE 6-30R RECEPTACLE	D-24,26 D-28,30	30/2	(2) #10, (1) #10 GND (2) #10, (1) #10 GND
216	1	GLO-RAY MULTI STAGING WARMER	708	120	1	–	5.9	CONFIRM IF CORD & PLUG SUPPLIED W/ UNIT	--	D-32	20/1	(2) #12, (1) #12 GND
496	1	ICE MACHINE	1560	208	1	–	7.5	CONFIRM IF CORD & PLUG SUPPLIED W/ UNIT	PROVIDE 6-20R RECEPTACLE WATER COOLED	D-34,36	20/2	(2) #12, (1) #12 GND
552B	1	FRESH BAKED DOUBLE CONVECTION OVEN WITH STAND	7494 936	208 120	3 1	– –	20.8 7.8	CONFIRM IF CORD & PLUG SUPPLIED W/ UNIT CONFIRM IF CORD & PLUG SUPPLIED W/ UNIT	PROVIDE L15-30R RECEPTACLE 2 SEPARATE CKTS REQ'D.	D-37,39,41 DD-43	30/3 20/1	(3) #10, (1) #10 GND (2) #12, (1) #12 GND
563	1	POWER BASE	300	120	1	–	2.5	INTEGRAL CORD & PLUG	--	DD-38	20/1	(2) #12, (1) #12 GND
568	1	REFRIGERATOR	–	120	1	–	–	CONFIRM IF CORD & PLUG SUPPLIED W/ UNIT	--	DD-33	20/1	(2) #12, (1) #12 GND
573	1	FREEZER	–	120	1	–	–	CONFIRM IF CORD & PLUG SUPPLIED W/ UNIT	--	DD-7	20/1	(2) #12, (1) #12 GND
PEP	1	PEPSI REFRIGERATOR	–	120	1	–	–	CONFIRM IF CORD & PLUG SUPPLIED W/ UNIT	--	DD-35	20/1	(2) #12, (1) #12 GND
EWH	1	ELECTRIC WATER HEATER	19,953	480	3	–	24.0	PROVIDE NON-FUSED DISCONNECT	--	Y-8,10,12	35/3	(3) #8, (1) #10 GND

ⓧ KEYED NOTES:

1. (1) 1 1/4" CONDUIT AS SPARE FOR FUTURE USE.
2. ROOFTOP EXHAUST FAN 'EF-3' – 120V, 1/4 HP. WITH INTEGRAL DISCONNECT. PROVIDE REMOTE MANUAL STARTER AND MOUNT ON WALL ADJACENT TO HOOD IN ANTHONY'S SPACE.
3. ROOFTOP EXHAUST FAN 'EF-4' – 208V, 1Ø, 1HP. WITH INTEGRAL DISCONNECT. PROVIDE REMOTE MAGNETIC STARTER WITH START/STOP BUTTONS. FLUSH MOUNT IN WALL IN CHARLEY'S SPACE.
4. ANSUL ALARM PANEL. PROVIDE 120V POWER AND INTERCONNECT TO EXISTING FIRE ALARM PANEL FOR MONITORING.
5. MANUAL PULL STATION. PROVIDE CONNECTIONS TO ANSUL ALARM PANEL.
6. PROVIDE FLUSH MOUNT FLOOR BOX FOR POWER AND DATA.
7. ROUTE (2) 1" CONDUIT UNDERSLAB, (1) FOR POWER AND (1) FOR DATA.

EQUIPMENT SCHEDULE NOTES:

1. SEE ARCHITECTURAL INTERIOR ELEVATIONS FOR MOUNTING HEIGHTS OF MENU BOARDS AND ACTIVITY SIGNS.
2. MAKE CONNECTIONS TO LIGHTS FURNISHED WITH EXHAUST HOOD.
3. FINAL ROUGH-IN LOCATIONS/HEIGHTS OF ELECTRICAL DEVICES AND CONNECTIONS SHALL BE COORDINATED IN FIELD WITH EQUIPMENT INSTALLER.

FOOD GENERAL NOTES (CHARLEY'S SUBS, ANTHONY'S PIZZA, DUNKIN DONUTS):

1. ALL 120V, 15A AND 20A RECEPTACLES SHALL BE GFCI TYPE. EXCEPTION: CASH REGISTERS SHALL NOT BE GFCI TYPE.

DRINK STATION ELECTRICAL EQUIPMENT SCHEDULE

ITEM	QUAN.	DESCRIPTION	WATTS	VOLTS	PH	LOAD HP	LOAD AMPS	DISCONNECT	COMMENTS	PANEL – CB #	CB SIZE	WIRING
DS2	1	ICE TEA BREWER	1776	120	1	–	14.8	VERIFY INTEGRAL CORD & PLUG	--	L-2 – 1	20/1	(2) #12, (1) #12 GND
DS3	1	COFFEE BREWING SYSTEM	1800	120	1	–	15.0	VERIFY INTEGRAL CORD & PLUG	--	L-2 – 3	20/1	(2) #12, (1) #12 GND
DS4A	2	BEVERAGE DISPENSER	720	120	1	–	6.0	VERIFY INTEGRAL CORD & PLUG	--	L-2 – 2 L-2 – 4	20/1 20/1	(2) #12, (1) #12 GND (2) #12, (1) #12 GND
DS4B	2	ICE MACHINE	1704	120	1	–	14.2	VERIFY INTEGRAL CORD & PLUG	HACR BREAKER	L-2 – 6 L-2 – 8	20/1 20/1	(2) #12, (1) #12 GND (2) #12, (1) #12 GND
DS8	2	CARBONATOR	–	–	1	–	–	–	--	REFER TO PLAN	20/1	(2) #12, (1) #12 GND

BACK OF HOUSE ELECTRICAL EQUIPMENT SCHEDULE

ITEM	QUAN.	DESCRIPTION	WATTS	VOLTS	PH	LOAD HP	LOAD AMPS	DISCONNECT	COMMENTS	PANEL – CB #	CB SIZE	WIRING
BH02	1	CARBONATOR	–	120	1	–	–	–	–	REFER TO PLAN	20/1	(2) #12, (1) #12 GND
BH05	1	REFRIGERATOR – REACH-IN	984	120	1	–	8.2	VERIFY INTEGRAL CORD & PLUG	–	CS-18	20/1	(2) #12, (1) #12 GND
BH05A	1	REFRIGERATOR – REACH-IN	840	120	1	–	7.0	VERIFY INTEGRAL CORD & PLUG	–	CS-20	20/1	(2) #12, (1) #12 GND
BH06	2	FREEZER – REACH-IN	1128	120	1	–	9.4	VERIFY INTEGRAL CORD & PLUG	–	CS-22 CS-21	20/1 20/1	(2) #12, (1) #12 GND (2) #12, (1) #12 GND
BH25	1	HIGH-FLOW WATER FILTER	–	–	1	–	–	–	--	REFER TO PLAN	20/1	(2) #12, (1) #12 GND

DATES AND REVISIONS

No.	Date/Description
	04.11.12 – BID

EXCHANGE™

RICHARD L. BOWEN + ASSOCIATES INC.
13000 Shaker Boulevard / Cleveland, Ohio 44120
Phone: (216) 491-9300 Fax: (216) 491-9053
www.rlba.com - email@rlba.com

FT. MYER EXCHANGE
JBMHH - MYER
ARLINGTON, VIRGINIA

ENLARGED ELECTRICAL PLANS

DRAWN BY: CAR
CHECKED BY: GSS
RLB NO.: 7800.02
DRAWING NO. E5.1

P:\7800\7800.02 FT. MYER PX IMAGE UPGRADE CONST. CONTRACT DOCS\ELEC\780002_E05-01.DWG | PLOTTED 04-27-2012 08:03AM BY CASEY RODDIS

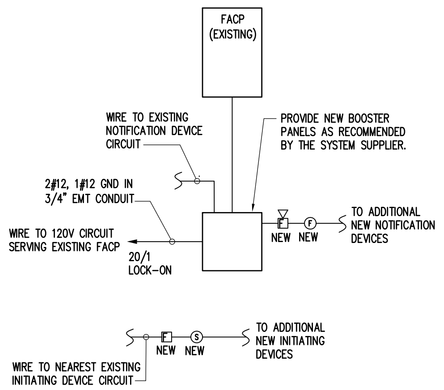

FIRE ALARM SYSTEM EXTENSION GENERAL NOTES:

1). EXISTING SYSTEM IS A FIRELITE MS9600 ADDRESSABLE SYSTEM.

2) NEW FIRE ALARM EQUIPMENT SHALL BE COMPATIBLE WITH EXISTING FIRELITE SYSTEM.

3). THIS RISER REPRESENTS A TYPICAL SYSTEM AND IS NOT INTENDED FOR INSTALLATION. THE SYSTEM SUPPLIER SHALL PROVIDE INSTALLATION DRAWINGS AND WIRING DIAGRAMS. EXACT SYSTEMS SHALL BE COORDINATED WITH SYSTEM SUPPLIER.

4). SYSTEM SUPPLIER SHALL SUPERVISE INSTALLATION, PROGRAM AND TEST SYSTEM, AND INSTRUCT OWNER ON SYSTEM OPERATION.

5). ALL FIRE ALARM WIRING SHALL BE IN MINIMUM 3/4" CONDUIT. ALL WIRING SHALL BE PROVIDED BY ELECTRICAL CONTRACTOR AND VERIFIED WITH THE SYSTEM SUPPLIER PRIOR TO BID. PROVIDE WIRING TO ALL DEVICES AS INDICATED AND AS RECOMMENDED BY THE SYSTEM SUPPLIER.

6). SHOP DRAWINGS SHALL BE SUBMITTED FOR APPROVAL BY THE ENGINEER AND LOCAL FIRE MARSHALL PRIOR TO THE START OF SYSTEM INSTALLATION. SHOP DRAWINGS SHALL CONTAIN THE FOLLOWING INFORMATION:

A. SCALABLE FLOOR PLAN(S) WHICH INDICATE THE USE OF ALL ROOMS.
B. LOCATIONS OF ALARM-INITIATING AND NOTIFICATION APPLIANCES.
C. ALARM CONTROL AND TROUBLE SIGNALING EQUIPMENT.
D. ANNUNCIATION.
E. POWER CONNECTION.
F. BATTERY CALCULATIONS.
G. CONDUCTOR TYPE AND SIZES.
H. VOLTAGE DROP CALCULATIONS.
I. MANUFACTURERS, MODEL NUMBERS AND LISTING INFORMATION FOR EQUIPMENT, DEVICES, AND MATERIALS.
J. DETAILS OF CEILING HEIGHT AND CONSTRUCTION.

FIRE ALARM SYSTEM EXTENSION RISER

SCALE: NONE

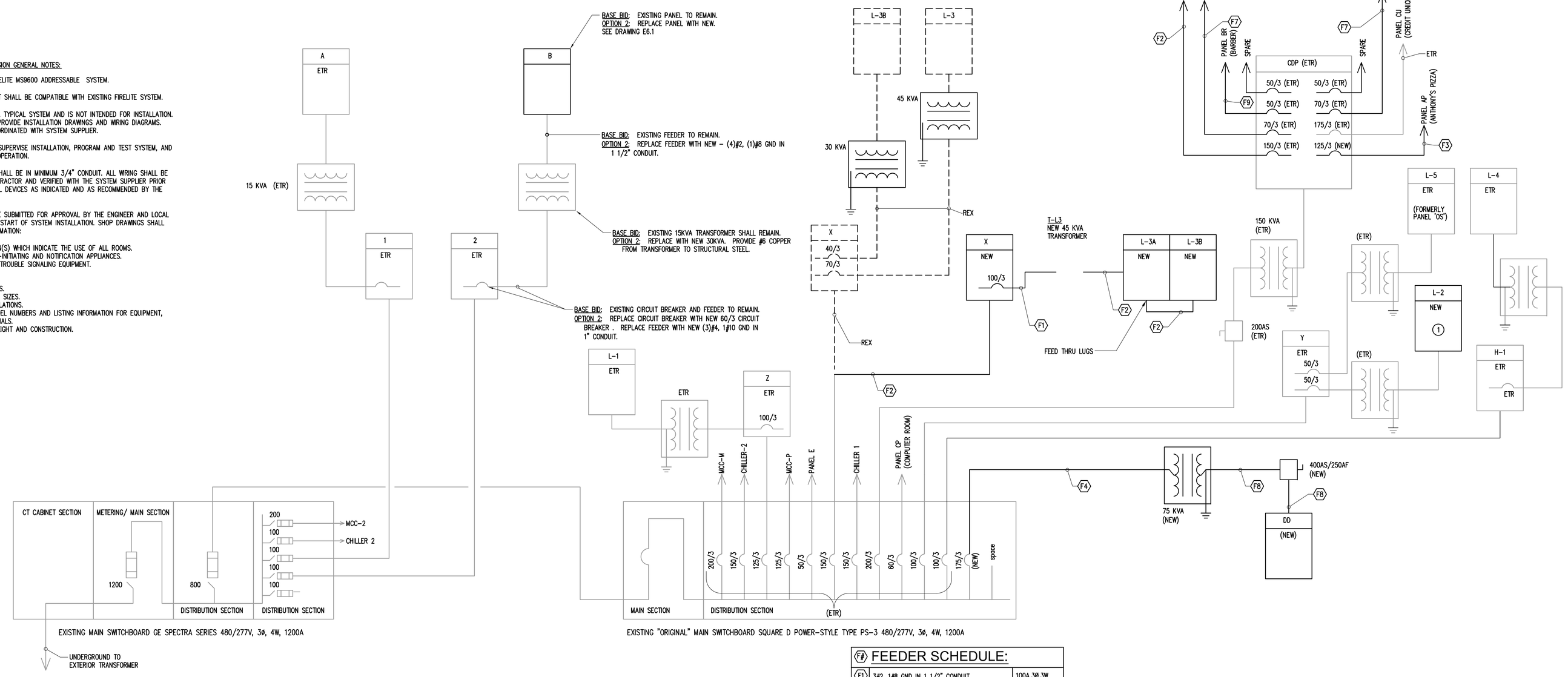

POWER DISTRIBUTION RISER

SCALE: N.T.S.

(X) RISER NOTES:

1. PANEL TO BE REPLACED WITH NEW AT SAME LOCATION.

(F#) FEEDER SCHEDULE:

(F1)	3#2, 1#8 GND IN 1 1/2" CONDUIT	100A,3Ø,3W
(F2)	4#1/0, 1#6 GND IN 2" CONDUIT	150A,3Ø,4W
(F3)	4#1, 1#8 GND IN 1 1/2" CONDUIT	125A,3Ø,4W
(F4)	3#2/0, 1#6 GND IN 2" CONDUIT	175A,3Ø,3W
(F5)	4#3/0, 1#6 GND IN 2" CONDUIT	200A,3Ø,4W
(F6)	4#500 KCMIL, 1#1 GND IN 3" CONDUIT	400A,3Ø,4W
(F7)	4#4, 1#8 GND IN 1" CONDUIT	70A,3Ø,4W
(F8)	4#250 KCMIL, 1#4 GND IN 2 1/2" CONDUIT	250A,3Ø,4W
(F9)	4#6, 1#10 GND IN 1" CONDUIT	50A,3Ø,4W

(XX) LIGHTING CONTROL PANEL GENERAL NOTES:

1. PROVIDE A ELECTRONICLIGHTING CONTROL PANEL AS SPECIFIED IN SECTION 260943 NETWORK LIGHTING CONTROLS CONSISTING OF:
   A. A MINIMUM OF 16 SINGLE POLE 120/277V, 20A LOAD RATED RELAYS AS SHOWN.
   B. INPUTS FOR LOW VOLTAGE SWITCHES, OCCUPANCY SENSORS AND LIGHT SENSORS.
   C. ASTRONOMICAL/SCHEDULED TIME CLOCK.
   D. USER KEYPAD.
   E. PROGRAM MEMORY SHALL BE NON-VOLATILE AND CLOCK SHALL RETAIN TIME KEEPING DURING POWER OUTAGES FOR AT LEAST 48 HOURS.

2. PROVIDE LOW VOLTAGE SWITCHES TO OVERRIDE AND EXTEND LIGHTING SCHEDULE AS SHOWN ON DRAWINGS. SWITCH SHALL BE PROVIDED BY SAME MANUFACTURER AS THE PANEL MANUFACTURER (TYPICAL).

3. PROVIDE LOW VOLTAGE NETWORKED WIRING AS RECOMMENDED BY THE SYSTEM SUPPLIER (TYPICAL).

4. CONTRACTOR SHALL PROGRAM PANEL IN ACCORDANCE WITH THE LIGHTING CONTROL RELAY SCHEDULE. CONFIRM EXACT SCHEDULE WITH THE COR (TYPICAL).

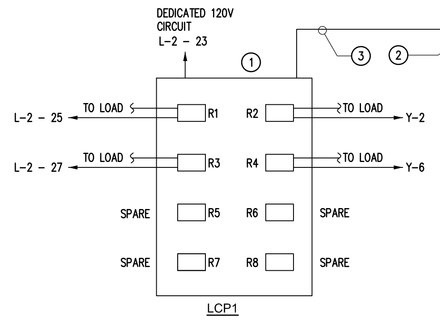

LIGHTING CONTROL PANEL LCP1 RELAY PROGRAMMING SCHEDULE			
RELAY	CIRCUIT LOAD DESCRIPTION	SCHEDULE	OVERRIDE SWITCH
R1	OUTDOOR SIGN	5 AM ON - DAWN OFF, DUSK ON - 11 PM OFF	NONE
R2	LIGHTING-MALL OF HEROES	EMPLOYEE LIGHTING: ON AT 5:00 AM, OFF AT 11 PM	LV1&2-BUTTON 1
R3	OUTDOOR SIGN	5 AM ON - DAWN OFF, DUSK ON - 11 PM OFF	NONE
R4	LIGHTING-MALL OF HEROES	CUSTOMER LIGHTING: ON AT 7:00 AM, OFF AT 9:00 PM	LV1&2-BUTTON 2
R5	SPARE		
R6	SPARE		
R7	SPARE		
R8	SPARE		

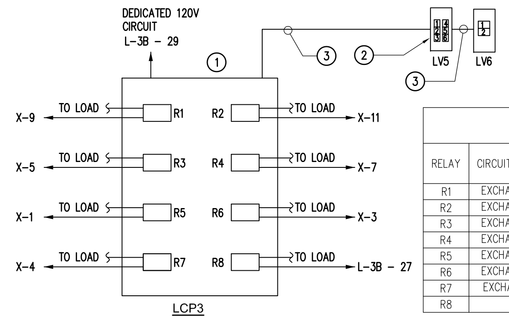

LIGHTING CONTROL PANEL LCP3 RELAY PROGRAMMING SCHEDULE			
RELAY	CIRCUIT LOAD DESCRIPTION	SCHEDULE	OVERRIDE SWITCH
R1	EXCHANGE RETAIL SALES	CUSTOMER LIGHTING: ON AT 7:00 AM, OFF AT 9:00 PM	LV5-BUTTON 1
R2	EXCHANGE RETAIL SALES	EMPLOYEE LIGHTING: ON AT 5:00 AM, OFF AT 11:00 PM	LV5-BUTTON 2
R3	EXCHANGE RETAIL SALES	CUSTOMER LIGHTING: ON AT 7:00 AM, OFF AT 9:00 PM	LV5-BUTTON 3
R4	EXCHANGE RETAIL SALES	EMPLOYEE LIGHTING: ON AT 5:00 AM, OFF AT 11:00 PM	LV5-BUTTON 4
R5	EXCHANGE RETAIL SALES	CUSTOMER LIGHTING: ON AT 7:00 AM, OFF AT 9:00 PM	LV5-BUTTON 5
R6	EXCHANGE RETAIL SALES	EMPLOYEE LIGHTING: ON AT 5:00 AM, OFF AT 11:00 PM	LV5-BUTTON 6
R7	EXCHANGE CORINCE LTG	CUSTOMER LIGHTING: ON AT 7:00 AM, OFF AT 9:00 PM	LV6-BUTTON 1
R8	TRACK LTG	CUSTOMER LIGHTING: ON AT 7:00 AM, OFF AT 9:00 PM	LV6-BUTTON 2

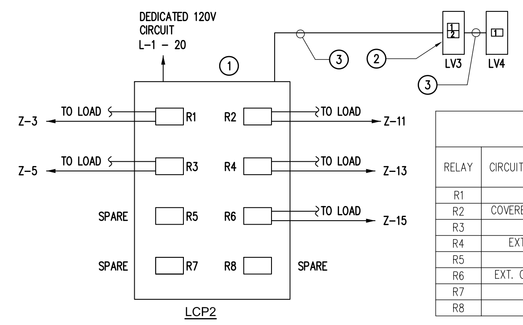

LIGHTING CONTROL PANEL LCP2 RELAY PROGRAMMING SCHEDULE			
RELAY	CIRCUIT LOAD DESCRIPTION	SCHEDULE	OVERRIDE SWITCH
R1	SALES LTG	CUSTOMER LIGHTING: ON AT 5:00AM, OFF AT 11 PM	LV3-BUTTON 1
R2	COVERED OUTDOOR SALES	CUSTOMER LIGHTING: ON AT 5:00 AM, OFF AT 11 PM	LV4
R3	SALES LTG	CUSTOMER LIGHTING: ON AT 5:00AM, OFF AT 11 PM	LV3-BUTTON 2
R4	EXTERIOR ODL LTG	5 AM ON - DAWN OFF, DUSK ON - 11 PM OFF	NONE
R5	SPARE		
R6	EXT. ODL EMPLOYEE LTG	5 AM ON - DAWN OFF, DUSK ON - 11 PM OFF	NONE
R7	SPARE		
R8	SPARE		

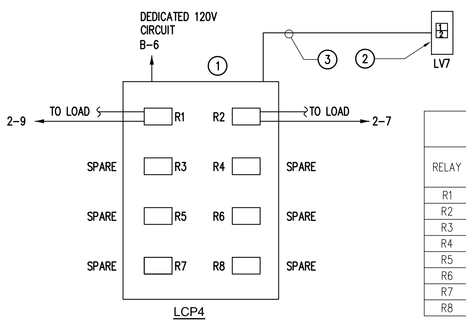

LIGHTING CONTROL PANEL LCP4 RELAY PROGRAMMING SCHEDULE			
RELAY	CIRCUIT LOAD DESCRIPTION	SCHEDULE	OVERRIDE SWITCH
R1	MCSS EMPLOYEE LTG	EMPLOYEE LIGHTING: ON AT 5:00 AM, OFF AT 11:00 PM	LV7-BUTTON 1
R2	MCSS CUSTOMER LTG	CUSTOMER LIGHTING: ON AT 7:00 AM, OFF AT 9:00 PM	LV7-BUTTON 2
R3	SPARE		
R4	SPARE		
R5	SPARE		
R6	SPARE		
R7	SPARE		
R8	SPARE		

LIGHTING CONTROL PANEL DETAILS

SCALE: NOT TO SCALE

DATES AND REVISIONS

No.	Date/Description
	04.11.12 - BID

EXCHANGE™

RICHARD L. BOWEN + ASSOCIATES INC.
13000 Shaker Boulevard / Cleveland, Ohio 44120
Phone: (216) 491-0300 Fax: (216) 491-8053
www.rlba.com - email@rlba.com

FT. MYER EXCHANGE
JBMHH - MYER
ARLINGTON, VIRGINIA

POWER DISTRIBUTION RISER

DRAWN BY: CAR
CHECKED BY: GSS
RLB NO.: 7800.02

DRAWING NO. E6.0

P:\7800\7800.02 FT. MYER PX IMAGE UPGRADE CONST. CONTRACT DOCS\ELEC\780002_E06-00.DWG | PLOTTED 04.27.2012 08:04AM BY CASEY RODDIS

PANELBOARD LOADING SCHEDULE	VOLTS 480/277V	PANEL No. 2	EXISTING
SURFACE MOUNTED	PHASE 3	TYPE GE A Series	
Stock Room	WIRE 4	MAINS: 125A MLO	

CKT No.	LOAD DESCRIPTION		VA	AMPS	POLE	A	B	C	AMPS	POLE	VA		LOAD DESCRIPTION	CKT No.
1			**6340**			6886			**20**	**1**	**546**	**	**ALTERATIONS/OFFICE LTG**	2
3	**Transformer**	**OP**	**5860**	**60**	**3**		6460		20	1	600		Retail Lights	4
5			**5820**					6420	20	1	600		"Bad"	6
7	**MCSS RETAIL AREA LTG**	*	**2976**	**20**	**1**	3576			20	1	600		Garden Lights	8
9	**MCSS RETAIL AREA LTG**	*	**3999**	**20**	**1**		4599		20	1	600		Garden Lights	10
11	**MCSS RETAIL AREA EM. LTG**	*	**837**	**20**	**1**			1437	20	1	600		Storage Room Lights "Bad"	12
13	Garden Center Lights?	EX	600			600			20	1			SPARE	14
15				50	3		600		20	1	600		Outside Lights	16
17								600	20	1	600		Outside Lights	18
19	SPARE			20	1	600			20	1	600		Outside Lights	20
21	SPARE			20	1		0		20	1			SPARE	22
23	SPARE			20	1			0	20	1			SPARE	24

TOTAL CONNECTED LOAD	31778	11662	11659	8457
TOTAL AMPERES	38.2	97.2	97.2	70.5
FEEDER SIZE EXISTING				
TOTAL DEMAND LOAD	31614			
TOTAL DEMAND AMPERES	38.043			

EX - EXISTING CIRCUIT TO REMAIN
*RE-USE EXISTING CIRCUIT BREAKER.
**PROVIDE NEW CIRCUIT BREAKER AS INDICATED.
OP - BASE BID: 30/3 SHALL REMAIN
OPTION 2: REPLACE WITH NEW 60/3 CB

PANELBOARD LOADING SCHEDULE	VOLTS 208/120V	PANEL No. AP	NEW
RECESSED	PHASE 3	TYPE	
Anthony's Pizza	WIRE 4	MAINS: 125/3 MCB	

CKT No.	LOAD DESCRIPTION		VA	AMPS	POLE	A	B	C	AMPS	POLE	VA		LOAD DESCRIPTION	CKT No.
1	FOOD WARMER 'AP04'		500	20	1	1000			20	1	500		ACTIVITY SIGN 'AP19'	2
3	REFRIGERATOR 'AP09'		420	20	1		876		20	1	456		POS 'AP12' & 'AP12A'	4
5	REFRIGERATOR 'AP09'		420	20	1			1500	20	1	1080		PIZZA TABLE 'AP11'	6
7	HEATED DISP CASE 'AP17'		1476	20	1	2876			20	1	1400		DOUGH PRESS 'AP05'	8
9	HEATED DISP CASE 'AP17'		1476	20	1		2172		20	1	696		EXHAUST FAN 'EF-3'	10
11	HOLDING CAB DRWR 'AP52'		1800	20	1			3000	20	1	1200		DIGITAL MENU BRD 'AP07'	12
13			4800			9600					4800			14
15	OVEN CONVEYOR 'AP08'		4800	50	3		9600		50	3	4800		OVEN CONVEYOR 'AP08'	16
17			4800					9600			4800			18
19	CONV. RECEPTACLES		540	20	1	940			20	1	400		120V PENDANT LTG	20
21	BREAK ROOM RECEPTS		540	20	1		640		20	1	100		EXHAUST HOOD LTG	22
23	SPARE			20	1			300	20	1	300		ANSUL ALARM PANEL	24
25	SPARE			20	1	400			20	1	400		SIGN POWER	26
27	SPARE			20	1		0		20	1			SPARE	28
29	SPARE			20	1			0	20	1			SPARE	30

TOTAL CONNECTED LOAD	42504	14816	13288	14400
TOTAL AMPERES	118.1	123.5	110.7	120.0
FEEDER SIZE REFER TO DRAWINGS				
TOTAL DEMAND LOAD	30014			
TOTAL DEMAND AMPERES	83.372			

PANELBOARD LOADING SCHEDULE	VOLTS 208/120V	PANEL No. B	EXISTING - BASE BID
SURFACE MOUNTED	PHASE 3	TYPE GE A Series	
Stock	WIRE 4	MAINS: 60/3 MCB	

CKT No.	LOAD DESCRIPTION		VA	AMPS	POLE	A	B	C	AMPS	POLE	VA		LOAD DESCRIPTION	CKT No.
1			2400			3000			20	1	600	EX	Rain Bird System	2
3	POWER LIFT	EX	2400	30	3		3000		20	1	600	EX	Hem/Garden Steel___ REC	4
5			2400					3000	20	1	600	EX	EXISTING LOAD	6
7	??	EX	600	20	1	1200			20	1	600	EX	EXISTING LOAD	8
9	??	EX	600	20	1		1200		20	1	600	EX	Outside Garden REC	10
11	SPARE	SP		20	1			600	20	1	600	EX	Outside Garden REC	12
13	SPARE	SP		20	1	600			20	1	600	EX	Bellagio Lights	14
15	SPARE	SP		20	1		0		20	1		SP	SPARE	16
17	??	EX	600	20	1			600	20	1		SP	SPARE	18
19	SPARE	SP		20	1	0			20	1		SP	SPARE	20
21	SPARE	SP		20	1		0		20	1		SP	SPARE	22
23	SPARE	SP		20	1			0	20	1		SP	SPARE	24

TOTAL CONNECTED LOAD	13200	4800	4200	4200
TOTAL AMPERES	36.7	40.0	35.0	35.0
FEEDER SIZE EXISTING				
TOTAL DEMAND LOAD	11310			
TOTAL DEMAND AMPERES	31.417			

EX - EXISTING TO REMAIN
SP - THIS CIRCUIT SHOULD BE SPARE AFTER DEMOLITION

PANELBOARD LOADING SCHEDULE	VOLTS 208/120V	PANEL No. B	NEW - OPTION 2
SURFACE MOUNTED	PHASE 3	TYPE GE A Series	
Stock	WIRE 4	MAINS: 100/3 MCB	

CKT No.	LOAD DESCRIPTION		VA	AMPS	POLE	A	B	C	AMPS	POLE	VA		LOAD DESCRIPTION	CKT No.
1			2400			3000			20	1	600	RF	Rain Bird System	2
3	POWER LIFT	RF	2400	30	3		2940		20	1	540	RF	Home/Garden Stockroom REC	4
5			2400					2580	**20**	**1**	**180**		**LTG CONTROL PANEL 'LCP4'**	6
7	**MERCHANDISER DETECTOR**	**	**400**	**20**	**1**	400			20	1			SPARE	8
9	**MERCHANDISER DETECTOR**	**	**400**	**20**	**1**		940		20	1	540	RF	Outside Garden REC	10
11	**CASEWORK REC**	**	**1080**	**20**	**1**			1620	20	1	540	RF	Outside Garden REC	12
13	**CASEWORK REC**	**	**1080**	**20**	**1**	1680			20	1	600	RF	Bellagio Lights	14
15	**SERVICE COUNTER QUAD**	**	**360**	**20**	**1**		540		**20**	**1**	**180**	**	**SERVICE COUNTER DUPLEX**	16
17	**SERVICE COUTNER DUPLEX**	**	**180**	**20**	**1**			540	**20**	**1**	**360**	**	**SERVICE COUNTER QUAD**	18
19	**SERVICE COUNTER QUAD**	**	**360**	**20**	**1**	540			**20**	**1**	**180**	**	**SERVICE COUNTER DUPLEX**	20
21	**SERVICE COUTNER DUPLEX**	**	**180**	**20**	**1**		540		**20**	**1**	**360**	**	**SERVICE COUNTER QUAD**	22
23	**SERVICE COUNTER QUAD**	**	**360**	**20**	**1**			720	**20**	**1**	**360**	**	**ALTERATION WORKSTATION**	24
25	**SERVICE COUTNER DUPLEX**	**	**180**	**20**	**1**	360			**20**	**1**	**180**	**	**ALTERATIONS POS DUPLEX**	26
27	SPARE			20	1		540		**20**	**1**	**540**	**	**ALTERATIONS CONV REC**	28
29	SPARE			20	1			360	**20**	**1**	**360**	**	**ALTERATIONS POS QUAD**	30
31	SPARE			20	1	360			**20**	**1**	**360**	**	**ALTERATION WORKSTATION**	32
33	SPARE			20	1		360		**20**	**1**	**360**	**	**ALTERATION WORKSTATION**	34
35	SPARE			20	1			0	20	1			SPARE	36
37	SPARE			20	1	0			20	1			SPARE	38
39	SPARE			20	1		0		20	1			SPARE	40
41	SPARE			20	1			0	20	1			SPARE	42

TOTAL CONNECTED LOAD	18020	6340	5860	5820
TOTAL AMPERES	50.1	52.8	48.8	48.5
FEEDER SIZE REFER TO DRAWING				
TOTAL DEMAND LOAD	16414			
TOTAL DEMAND AMPERES	45.594			

RF - REFEED EXISTING CIRCUIT FROM NEW PANEL

PANELBOARD LOADING SCHEDULE	VOLTS 208/120V	PANEL No. BR	NEW
RECESSED	PHASE 3	TYPE	
Barber Shop	WIRE 4	MAINS: 50/3 MCB	

CKT No.	LOAD DESCRIPTION		VA	AMPS	POLE	A	B	C	AMPS	POLE	VA		LOAD DESCRIPTION	CKT No.
1	CONV. RECEPTACLES		360	20	1	720			20	1	360		CONV RECEPTACLES	2
3	SINK RECEPTACLES		360	20	1		720		20	1	360		SINK RECEPTACLES	4
5	SINK RECEPTACLES		360	20	1			720	20	1	360		P.O.S.	6
7	SINK RECEPTACLES		360	20	1	540			20	1	180		P.O.S.	8
9	SINK RECEPTACLES		360	20	1		720		20	1	360		TV RECEPTACLE	10
11	SINK RECEPTACLES		360	20	1			610	20	1	250		SIGNAGE	12
13	SPARE			20	1	360			20	1	360		SINK RECEPTACLES	14
15	SPARE			20	1		0		20	1			SPARE	16
17	SPARE			20	1			0	20	1			SPARE	18
19	SPARE			20	1	0			20	1			SPARE	20
21	SPARE			20	1		0		20	1			SPARE	22
23	SPARE			20	1			0	20	1			SPARE	24

TOTAL CONNECTED LOAD	4390	1620	1440	1330
TOTAL AMPERES	12.2	13.5	12.0	11.1
FEEDER SIZE REFER TO DRAWINGS				
TOTAL DEMAND LOAD	4390			
TOTAL DEMAND AMPERES	12.194			

PANELBOARD LOADING SCHEDULE	VOLTS 208/120V	PANEL No. CDP	EXISTING
SURFACE MOUNTED	PHASE 3	TYPE SQ D I-Line	
Stair to Mezz	WIRE 4	MAINS: 400/3 MCB	

CKT No.	LOAD DESCRIPTION		VA	AMPS	POLE	A	B	C	AMPS	POLE	VA		LOAD DESCRIPTION	CKT No.
1						14816					**14816**			2
3	**SPARE**	*		**50**	**3**		13288		**125**	**3**	**13288**	**	**Panel 'AP'**	4
5								14400			**14400**			6
7			**1620**			1620								8
9	**Panel 'BR'**	*	**1440**	**50**	**3**		1440		**50**	**3**		*	**SPARE**	10
11			**1330**					1330						12
13			**1440**			9440					8000			14
15	**Panel 'GNC'**	*	**1440**	**70**	**3**		9440		175	3	8000	EX	CU Credit Union	16
17			**1440**					9440			8000			18
19			**22652**			23922					**1270**			20
21	**Panel 'CS'**	*	**21005**	**150**	**3**		22025		**70**	**3**	**1020**	*	**Panel 'OP'**	22
23			**19063**					20143			**1080**			24
25	Space					0							Space	26
27	Space						0						Space	28
29	Space							0					Space	30

TOTAL CONNECTED LOAD	141304	49798	46193	45313
TOTAL AMPERES	392.5	415.0	384.9	377.6
FEEDER SIZE EXISTING				
TOTAL DEMAND LOAD	113043			
TOTAL DEMAND AMPERES	314.01			

EX - EXISTING CIRCUIT TO REMAIN
*RE-USE EXISTING CIRCUIT BREAKER.
**PROVIDE NEW CIRCUIT BREAKER AS INDICATED.

PANELBOARD LOADING SCHEDULE	VOLTS 208/120V	PANEL No. CS	NEW
RECESSED	PHASE 3	TYPE	
Charley's Subs	WIRE 4	MAINS: 150/3 MCB	

CKT No.	LOAD DESCRIPTION		VA	AMPS	POLE	A	B	C	AMPS	POLE	VA		LOAD DESCRIPTION	CKT No.
1	FOOD PROCESSOR 'K14'		1680	20	1	2660			20	1	980		POS 'E1', 'E2', 'E3' & 'E4'	2
3	HOT TOPPING 'K6'		1000	20	1		1400		20	1	400		SIGN 'G3'	4
5	TABLE 'K2'		840	20	1			1240	20	1	400		SIGN 'G6'	6
7	MENU BOARD 'MG1'		600	20	1	840			20	1	240		ACCESSORIES 'K1'	8
9	LIGHT BOX 'G8'		600	20	1		1632		20	1	1032		SAND/SALAD 'K9'	10
11	LIGHT BOX 'G9'		600	20	1			1440	20	1	840		WARMER 'K3'	12
13	BEV. DISP. 'K10'		732	20	1	3061			30	2	2329		CONVEYOR 'K5'	14
15	CONV. REC.		720	20	1		3050				2330			16
17	LED LIGHT BOX 'G9.1'		400	20	1			1384	20	1	984		REFRIGERATOR 'BH05'	18
19	SAND/SALAD 'K13'		1032	20	1	1872			20	1	840		REFRIGERATOR 'BH05A'	20
21	FREEZER 'BH06'		1128	20	1		2256		20	1	1128		FREEZER 'BH06'	22
23	EXHAUST FAN 'EF-4' FOR		832	20	2			2732	20	1	1900		120V PENDANTS/TRACK	24
25	EXHAUST HOOD 'H-1'		832			1552			20	1	720		OFFICE REC	26
27	EXHAUST HOOD LTG		100	20	1		400		20	1	300		ANSUL ALARM PANEL	28
29	SPACE							0					SPACE	30
31			3800			8467					4667			32
33	ELECTRIC GRIDDLE 'K1-1'		3800	40	3		8467		50	3	4667		ELECTRIC FRYER 'K1'	34
35			3800					8467			4667			36
37			3800			4200			20	1	400		SIGN POWER	38
39	ELECTRIC GRIDDLE 'K1-1'		3800	40	3		3800		20	1			SPARE	40
41			3800					3800	20	1			SPARE	42
43	SPARE			20	1	0			20	1			SPARE	44
45	SPARE			20	1		0		20	1			SPARE	46
47	SPARE			20	1			0	20	1			SPARE	48
49	SPARE			20	1	0			20	1			SPARE	50
51	SPARE			20	1		0		20	1			SPARE	52
53	SPARE			20	1			0	20	1			SPARE	54
55	SPARE			20	1	0			20	1			SPARE	56
57	SPARE			20	1		0		20	1			SPARE	58
59	SPARE			20	1			0	20	1			SPARE	60

TOTAL CONNECTED LOAD	62720	22652	21005	19063
TOTAL AMPERES	174.2	188.8	175.0	158.9
FEEDER SIZE REFER TO DRAWINGS				
TOTAL DEMAND LOAD	45827			
TOTAL DEMAND AMPERES	127.3			

PANELBOARD LOADING SCHEDULE	VOLTS 208/120V	PANEL No. DD	NEW
RECESSED	PHASE 3	TYPE	
Dunkin Donuts	WIRE 4	MAINS: 250/3 MCB	

CKT No.	LOAD DESCRIPTION		VA	AMPS	POLE	A	B	C	AMPS	POLE	VA		LOAD DESCRIPTION	CKT No.
1	CONV. RECEPTACLES		1080	20	1	1320			20	1	240		BAKERY DISP. '70.5B'	2
3	TRAINING/DESK RECEPT		1080	20	1		1320		20	1	240		BAKERY DISP. '70.5B'	4
5	POS		720	20	1			2384	20	2	1664		DUNKACCINO MACHINE	6
7	REFRIGERATOR '558'		600	20	1	2264					1664		'107A'	8
9	CONVENIENCE RECEPT		360	20	1		2440		30	2	2080		ESPRESSO MACHINE '96'	10
11	AXIOM TWIN COFFEE		3078	40	2			5158			2080			12
13	BREWER '101P-3'		3078			3258			20	1	180		HEADSET TRANSMITTER	14
15	AXIOM SINGLE COFFEE		1737	20	2		2937		20	1	1200		HOLDING CAB. '212A'	16
17	BREWER '101PP-3		1737					3177	20	1	1440		SANDWICH '212'	18
19	GRINDER '101Q-3'		1320	20	1	2963			20	2	1643		BAGEL TOASTER '210C'	20
21	DISP. '101C-1','101D,101E'		840	20	1		2483				1643			22
23	COOLATTA MACH '112'		1664	20	2			4659	30	2	2995		OVEN '215'	24
25			1664			4659					2995			26
27	REFRIGERATOR '120F-1'		600	20	1		3595		30	2	2995		OVEN '215'	28
29	ICED COFFEE '200A'		2049	30	2			5044			2995			30
31			2049			2757			20	1	706		WARMER '216'	32
33	FREEZER '573'		600	20	1		1380		20	2	780		ICE MACHINE	34
35	REFRIGERATOR 'PEP'		600	20	1			1380			780			36
37			2498			2798			20	1	300		POWER BASE '563'	38
39	CONVECTION OVEN '552B'		2498	30	3		4547		30	2	2049		ICED COFFEE '201B'	40
41			2498					4547			2049			42
43	CONVECTION OVEN '552B'		936	20	1	2985			30	2	2049		ICED COFFEE '201B'	44
45	SIGNAGE		200	20	1		2249				2049			46
47	SPARE			20	1			0	20	1			SPARE	48
49	SPARE			20	1	0			20	1			SPARE	50
51	SPARE			20	1		0		20	1			SPARE	52
53	SPARE			20	1			0	20	1			SPARE	54
55	SPARE			20	1	0			20	1			SPARE	56
57	SPARE			20	1		0		20	1			SPARE	58
59	SPARE			20	1			0	20	1			SPARE	60

TOTAL CONNECTED LOAD	70304	23004	20951	26349
TOTAL AMPERES	195.3	191.7	174.6	219.6
FEEDER SIZE REFER TO DRAWINGS				
TOTAL DEMAND LOAD	46889			
TOTAL DEMAND AMPERES	130.25			

PANELBOARD LOADING SCHEDULE	VOLTS 208/120V	PANEL No. GNC	NEW
RECESSED	PHASE 3	TYPE	
GNC	WIRE 4	MAINS: 70/3 MCB	

CKT No.	LOAD DESCRIPTION		VA	AMPS	POLE	A	B	C	AMPS	POLE	VA		LOAD DESCRIPTION	CKT No.
1	SIGNAGE		200	20	1	200			20	1			SPARE	2
3	SPARE			20	1		0		20	1			SPARE	4
5	SPARE			20	1			0	20	1			SPARE	6
7	SPARE			20	1	0			20	1			SPARE	8
9	SPARE			20	1		0		20	1			SPARE	10
11	SPARE			20	1			0	20	1			SPARE	12
13	SPARE			20	1	0			20	1			SPARE	14
15	SPARE			20	1		0		20	1			SPARE	16
17	SPARE			20	1			0	20	1			SPARE	18
19	SPARE			20	1	0			20	1			SPARE	20
21	SPARE			20	1		0		20	1			SPARE	22
23	SPARE			20	1			0	20	1			SPARE	24
25	SPARE			20	1	0			20	1			SPARE	26
27	SPARE			20	1		0		20	1			SPARE	28
29	SPARE			20	1			0	20	1			SPARE	30

TOTAL CONNECTED LOAD	200	200	0	0
TOTAL AMPERES	0.6	1.7	0.0	0.0
FEEDER SIZE REFER TO DRAWINGS				
TOTAL DEMAND LOAD	200			
TOTAL DEMAND AMPERES	0.5556			

PANELBOARD LOADING SCHEDULE	VOLTS 480/277V	PANEL No. H-1	EXISTING
SURFACE MOUNTED	PHASE 3	TYPE SQ D NEHB	
Stock Room	WIRE 4	MAINS: 100A MLO	

CKT No.	LOAD DESCRIPTION		VA	AMPS	POLE	A	B	C	AMPS	POLE	VA		LOAD DESCRIPTION	CKT No.
1	Lighting - ???	EX	500	20	1	1200			20	1	600		Lighting W ??	2
3	Lighting - ???	EX	500	20	1		1200		20	1	600		Lighting W ??	4
5	Lighting - ???	EX	500	20	1			1200	20	1	600		Emerg & Night Lights	6
7		EX		20	1	0			20	1				8
9		EX		20	1		0		20	1				10
11		EX		20	1			0	20	1				12
13		EX		20	1	0			20	1				14
15		EX		20	1		0		20	1				16
17		EX		20	1			0	20	1				18
19	Space					0							Space	20
21	Space						0						Space	22
23	Space							5400			5400			24
25	Space					4200			25	3	4200	EX	Transformer For Panel 'L-4'	26
27	Space						4200				4200			28
29								0					Space	30
31	AHU-8	EX		15	3	0							Space	32
33							0						Space	34
35	Space							0					Space	36
37	Space					0							Space	38
39	Space						0						Space	40
41	Space							0					Space	42

TOTAL CONNECTED LOAD	17400	5400	5400	6600
TOTAL AMPERES	20.9	45.0	45.0	55.0
FEEDER SIZE EXISTING				
TOTAL DEMAND LOAD	15540			
TOTAL DEMAND AMPERES	18.7			

EX - EXISTING CIRCUIT TO REMAIN
*RE-USE EXISTING CIRCUIT BREAKER.
**PROVIDE NEW CIRCUIT BREAKER AS INDICATED.

DATES AND REVISIONS

No.	Date/Description
	04.11.12 – BID

EXCHANGE™

RICHARD L. BOWEN + ASSOCIATES INC.
ARCHITECTS • ENGINEERS • MANAGERS • CONSTRUCTION
13000 Shaker Boulevard / Cleveland, Ohio 44120
Phone: (216) 491-9300 Fax: (216) 491-8053
www.rlba.com - email@rlba.com

FT. MYER EXCHANGE
JBMHH - MYER
ARLINGTON, VIRGINIA

PANEL SCHEDULES

DRAWN BY: CAR
CHECKED BY: GSS
RLB NO.: 7800.02

DRAWING NO.
E6.1

P:\7800\7800.02 FT. MYER PX IMAGE UPGRADE CONST. CONTRACT DOCS\ELEC\7800X02_E06-01.DWG | PLOTTED 04.27.2012 08:06AM BY CASEY RODDIS

PANELBOARD LOADING SCHEDULE	VOLTS 208/120V	PANEL No. L-1	EXSTING
RECESSED	PHASE 3	TYPE SQ D NQOB	
Hallway	WIRE 4	MAINS: 175/3 MCB	

CKT No.	LOAD DESCRIPTION		VA	AMPS	POLE	A	B	C	AMPS	POLE	VA	LOAD DESCRIPTION	CKT No.
1	**ODL MERCHANDIESR**	**SP**	**540**	**20**	**1**	1140			20	1	600	EX Power Pole	2
3	**INSIDE ODL CONV REC**	**SP**	**900**	**20**	**1**		1500		20	1	600	EX LTG - Toilets	4
5	**POS AND ODL CONV REC**	**SP**	**1080**	**20**	**1**			1480	**20**	**1**	**400**	* **INTERCOM SYSTEM**	6
7	REC - Cash / Office	EX	600	20	1	780			**20**	**1**	**180**	* **SAFE**	8
9	REC - Reception Near Man. Of.	EX	600	20	1		1320		**20**	**1**	**720**	* **CASH ROOM RECEPTACLES**	10
11	Teller	EX	600	20	1			960	**20**	**1**	**360**	* **CONV REC CASH / DROP RM**	12
13	Refrigerator REC	EX	600	20	1	600			**20**	**1**		**SP SPARE**	14
15	**SPLIT SYSTEM 'CU-1' &**	**	**1872**	**25**	**2**		2232		**20**	**1**	**360**	* **IDF**	16
17	**'FCU-1'**		**1872**					2472	20	1	600	EX Alarm System	18
19	REC - Training Room	EX	600	20	1	780			**20**	**1**	**180**	* **LTG CONTROL PANEL 'LCP2'**	20
21	Vending Room REC	EX	600	20	1		1200		20	1	600	EX Register Checkout	22
23	EPOS REC / EPOS Room	EX	600	20	1			1200	20	1	600	EX Sound System REC	24
25	REC EPOS Board	EX	600	20	1	1200			20	1	600	EX EPOS Room JB	26
27	REC in Back	EX	600	20	1		1200		20	1	600	EX REC Columns by Cashier Cntr	28
29	EWC	EX	600	20	1			1200	20	1	600	EX Fan EF-1 & HTR Vestibule	30
31	Vault Lights REC	EX	600	20	1	1200			20	1	600	EX Power Pole	32
33	REC in Receptionist	EX	600	20	1		780		**20**	**1**	**180**	*** Time Clock**	34
35	Door Locked Buzzer	EX	600	20	1			1200	20G	1	600	EX GFCI Toilet REC	36
37	REC Manager's Office	EX	600	20	1	1200			20	1	600	EX Microwave	38
39	C??? by Office Door?	EX	600	20	1		1200		20	1	600	EX Alex London ___ LTG?	40
41	C??? by Office Door?	EX	600	20	1			1200	20	1	600	EX Register Checkout	42

TOTAL CONNECTED LOAD	26044	6900	9432	9712
TOTAL AMPERES	72.3	57.5	78.6	80.9
FEEDER SIZE EXISTING				
TOTAL DEMAND LOAD	21515			
TOTAL DEMAND AMPERES	59.764			

EX - EXISTING CIRCUIT TO REMAIN
*RE-USE EXISTING CIRCUIT BREAKER.
**PROVIDE NEW CIRCUIT BREAKER AS INDICATED.
***EXTEND BRANCH CIRCUIT WIRING AS NEEDED.
G - GFCI Breaker
SP - THIS CIRCUIT SHOULD BE SPARE AFTER DEMOLITION. CONFIRM IN FIELD.

PANELBOARD LOADING SCHEDULE	VOLTS 208/120V	PANEL No. L-2	NEW
SURFACE MOUNTED	PHASE 3	TYPE SQ D NQOB	
Stairs to Mezz	WIRE 4	MAINS: 100/3 MCB	

CKT No.	LOAD DESCRIPTION		VA	AMPS	POLE	A	B	C	AMPS	POLE	VA	LOAD DESCRIPTION	CKT No.
1	ICE TEA BREWER 'DS2'		1776	20	1	2496			20	1	720	BEV DISPENSER 'DS4A'	2
3	COFFEE BREWER 'DS3'		1800	20	1		2520		20	1	720	BEV DISPENSER 'DS4A'	4
5	CONV. REC MALL OF HONOR		540	20	1			2244	20H	1	1704	ICE MACHINE 'DS4B'	6
7	CONV. REC MALL OF HONOR		540	20	1	2244			20H	1	1704	ICE MACHINE 'DS4B'	8
9	CONV. REC MALL OF HONOR		540	20	1		900		20	1	360	CONV REC DRINK STATION	10
11	CONV. REC MALL OF HONOR		720	20	1			1260	20	1	540	ATM	12
13	FLOOR REC. FOOD COURT		720	20	1	1720			20	1	1000	VENDING MACHINE	14
15	OVERHEAD ROLLUP GRILL		850	20	1		1850		20	1	1000	VENDING MACHINE	16
17	CONV. REC FOOD COURT		900	20	1			1900	20	1	1000	VENDING MACHINE	18
19	TV'S FOOD COURT		360	20	1	900			20	1	540	CONV REC LP OFFICES	20
21	TV'S FOOD COURT		360	20	1		720		20	1	360	IT ROOM RECPTACLES	22
23	LTG CONTROLL PANEL 'LCP1'		180	20	1			540	20	1	360	IT ROOM RECPTACLES	24
25	OUTDOOR SIGN		500	20	1	860			20	1	360	QUAD REC LP SURVEIL.	26
27	OUTDOOR SIGN		50	20	1		410		20	1	360	QUAD REC LP SURVEIL.	28
29	CABINET UNIT HTR 'CUH-1'		480	20	1			840	20	1	360	QUAD REC LP SURVEIL.	30
31	SPLIT SYSTEM 'CU-2' &		1352	20	2	1712			20	1	360	QUAD REC LP SURVEIL.	32
33	'FCU-2'		1352				2252		20	1	900	MENS HAND DRYER	34
35	CARBONATOR		200	20	1			1100	20	1	900	WOMEN'S HAND DRYER	36
37	CONTROL POWER		400	20	1	1480			20	1	1080	CEILING RECEPTACLES	38
39	CONTROL POWER		400	20	1		500		20	1	100	FA POWER SUPPLY	40
41	CONTROL POWER		400	20	1			1650	20	1	1250	CARBONATORS (BH02)	42
43	SPARE			20	1	0			20	1		SPARE	44
45	SPARE			20	1		0		20	1		SPARE	46
47	SPARE			20	1			0	20	1		SPARE	48
49	SPACE					0						SPACE	50
51	SPACE						0					SPACE	52
53	SPACE							0				SPACE	54
55	SPACE					0						SPACE	56
57	SPACE						0					SPACE	58
59	SPACE							0				SPACE	60

TOTAL CONNECTED LOAD	30098	11412	9152	9534
TOTAL AMPERES	83.6	95.1	76.3	79.5
FEEDER SIZE REFER TO DRAWINGS				
TOTAL DEMAND LOAD	25678			
TOTAL DEMAND AMPERES	71.328			

PANELBOARD LOADING SCHEDULE	VOLTS 208/120V	PANEL No. L-3A	NEW
SURFACE MOUNTED	PHASE 3	TYPE	
	WIRE 4	MAINS: 175/3 MCB	

CKT No.	LOAD DESCRIPTION		VA	AMPS	POLE	A	B	C	AMPS	POLE	VA	LOAD DESCRIPTION	CKT No.
1			2882			3242			20	1	360	SUNGLASSES MERCHAND.	2
3	Conveyor		2882	30	3		3242		20	1	360	GIFTWARE MINI TOWER	4
5			2882					3422	20	1	540	SERVICE COUNTER	6
7	CIGARETTE MERCHANDISER		720	20	1	1260			20	1	540	EVER READY FLOOR FIXT	8
9	CIGARETTE MERCHANDISER		720	20	1		1260		20	1	540	MERCHANDISER	10
11	CIGARETTE MERCHANDISER		540	20	1			900	20	1	360	TELEVISION RETAIL FLOOR	12
13	FA POWER SUPPLY		200	20	1	700			20	1	500	TV MERCHANDISER	14
15	TV MERCHANDISER		500	20	1		1000		20	1	500	TV MERCHANDISER	16
17	TV MERCHANDISER		500	20	1			1040	20	1	540	MERCHANDISER	18
19	SPARE			20	1	720			20	1	720	JEWELRY MERCHANDISER	20
21	SPARE			20	1		720		20	1	720	JEWELRY MERCHANDISER	22
23	MERCHANDISER		540	20	1			1080	20	1	540	MERCHANDISER	24
25	MERCHANDISER		540	20	1	1080			20	1	540	MERCHANDISER	26
27	MERCHANDISER		540	20	1		1080		20	1	540	MERCHANDISER	28
29	MERCHANDISER		540	20	1			1080	20	1	540	MERCHANDISER	30
31	MERCHANDISER		540	20	1	1080			20	1	540	MERCHANDISER	32
33	FEATURE FRAME		360	20	1		720		20	1	360	QUAD REC EQUIP B-117	34
35	MERCHANDISER		540	20	1			540	20	1		SPARE	36
37	SPARE			20	1	0			20	1		SPARE	38
39	SPARE			20	1		0		20	1		SPARE	40
41	SPARE			20	1				20	1		SPARE	42

TOTAL CONNECTED LOAD	24166	8082	8022	8062
TOTAL AMPERES	67.1	67.4	66.9	67.2
FEEDER SIZE REFER TO DRAWING				
TOTAL DEMAND LOAD	19677			
TOTAL DEMAND AMPERES	54.658			

PROVIDE FEED THRU LUGS

PANELBOARD LOADING SCHEDULE	VOLTS 208/120V	PANEL No. L-3B	NEW
SURFACE	PHASE 3	TYPE	
	WIRE 4	MAINS: 225A MLO	

CKT No.	LOAD DESCRIPTION		VA	AMPS	POLE	A	B	C	AMPS	POLE	VA	LOAD DESCRIPTION	CKT No.
1	SPARE			20	1	1080			20	1	1080	RM B-103 - B-105 CONV REC	2
3	MERCHANDISER		540	20	1		1260		20	1	720	ROOM B-105 PC REC	4
5	SPARE			20	1			720	20	1	720	ROOM B-104 PC REC	6
7	SPARE			20	1	720			20	1	720	ROOM B-103 PC REC	8
9	SPARE			20	1		800		20	1	800	COOLER 120V CIRCUITS	10
11	BEAUTY MERCH		360	20	1			1160	20	1	800	COOLER 120V CIRCUITS	12
13	FEATURE FRAME		360	20	1	1160			20	1	800	COOLER 120V CIRCUITS	14
15	GREETING CARD MERCH		720	20	1		1520		20	1	800	COOLER 120V CIRCUITS	16
17	MAG. RACK MERCHANDISER		540	20	1			540	20	1		SPARE	18
19			3820			5741					1921		20
21	WALK-IN FREEZER		3820	40	3		5741		20	3	1921	WALK-IN REFRIGERATOR	22
23	COND/EVAP		3820					5741			1921	COND/EVAP	24
25	TRACK LTG SALES FLOOR		1800	20	1	2340			20	1	540	MERCHANDISER	26
27	TRACK LTG SALES FLOOR		1800	20	1		2340		20	1	540	MERCHANDISER	28
29	LTG CONTROL PANEL 'LCP3'		180	20	1			540	20	1	360	RELOCATED IDF	30
31	MAG. RACK MERCHANDISER		540	20	1	540			20	1		COOLER EVAPS	32
33	FREEZER EVAPS			20	1		0		20	1		SPARE	34
35	SPARE			20	1			0	20	1		SPARE	36
37	SPARE			20	1	0			20	1		SPARE	38
39	SPARE			20	1		0		20	1		SPARE	40
41	SPARE			20	1			0	20	1		SPARE	42

TOTAL CONNECTED LOAD	31943	11581	11661	8701
TOTAL AMPERES	88.7	96.5	97.2	72.5
FEEDER SIZE REFER TO DRAWINGS				
TOTAL DEMAND LOAD	26758			
TOTAL DEMAND AMPERES	79.884			

PANELBOARD LOADING SCHEDULE	VOLTS 208/120V	PANEL No. L-4	EXISTING
SURFACE MOUNTED	PHASE 3	TYPE SQ D NQOB	
Stock Room	WIRE 4	MAINS: 60/3 MCB	

CKT No.	LOAD DESCRIPTION		VA	AMPS	POLE	A	B	C	AMPS	POLE	VA	LOAD DESCRIPTION	CKT No.
1	Security Observation Room	EX	600	20	1	1200			20		600	EX Lighting	2
3	REC - Warehouse	EX	600	20	1		1200		20		600	EX REC - Warehouse	4
5	REC - Cust. Serv.	EX	600	20	1			1200	20		600	EX REC - Cust. Serv. Wiremold	6
7	EXISTING LOAD	EX	600	20	1	1200			20		600	EX Corridor / Stockroom REC	8
9	EXISTING LOAD	EX	600	20	1		1200		20		600	EX REC - Cust. Serv.	10
11	Unit Heater	EX	600	20	1			1200	20		600	EX REC - Stock Room	12
13	EXISTING LOAD	EX	600	20	1	1200			20		600	EX REC - Stock Room	14
15	REC - Stock Room	EX	600	20	1		600					Space	16
17	REC - Shoe Stock Room	EX	600	20	1			600				Space	18
19	REC - Computer Room	EX	600	20	1	1200					600		20
21			600				1200		20	3	600	EX Conveyor	22
23	Conveyor	EX	600	20	3			1200			600		24
25			600			600							26
27							0						28
29								0					30

TOTAL CONNECTED LOAD	13800	5400	4200	4200
TOTAL AMPERES	38.3	45.0	35.0	35.0
FEEDER SIZE EXISTING				
TOTAL DEMAND LOAD	12750			
TOTAL DEMAND AMPERES	35.417			

EX - EXISTING CIRCUIT TO REMAIN
*RE-USE EXISTING CIRCUIT BREAKER.
**PROVIDE NEW CIRCUIT BREAKER AS INDICATED.

PANELBOARD LOADING SCHEDULE	VOLTS 208/120V	PANEL No. L-5	EXISTING (FORMERLY PANEL 'OS')
RECESSED	PHASE 3	TYPE	
Sales - Food	WIRE 4	MAINS: 100/3 MCB	

CKT No.	LOAD DESCRIPTION		VA	AMPS	POLE	A	B	C	AMPS	POLE	VA	LOAD DESCRIPTION	CKT No.
1	LTG in Office Area	EX	600	20	1	1200			20	1	600	EX Cord Shop LTG	2
3	REC in Casey's Office	EX	600	20	1		1200		20	1	600	EX Cord Shope LTG & ___	4
5	LTG in Class 6	EX	600	20	1			1200	20	1	600	SP SPARE	6
7	REC in Ceiling	EX	600	20	1	1200			20	1	600	EX Spare __ at column	8
9	**SAFE**	*	**180**	**20**	**1**		780		20	1	600	EX	10
11	**DEDICATED REC ON COLUMN**	*	**180**	**20**	**1**			780	20	2	600	EX Godiva	12
13	**OFFICE C-104 REC'S**	*	**720**	**20**	**1**	1320					600		14
15	**BATHRM / JANITOR REC**	*	**360**	**20**	**1**		360						16
17	**COUNTER REC**	*	**180**	**20**	**1**			180	20	3		SP SPARE	18
19	SPARE	SP		20	2	0							20
21							360		**20**	**1**	**360**	* **TV / CONV REC**	22
23								180	**20**	**1**	**180**	* **COUNTER REC**	24
25	SPARE	SP		20	3	0			20	1		EX Cord Rack Box VX	26
27							180		**20**	**1**	**180**	* **PWR STRIP BENCH TABLE**	28
29	**RM B-103 - B-105 CONV REC**	*	**1080**	**20**	**1**			1680	20	1	600	EX Texlon	30
31	Power Pole Cord Rack	EX	600	20	1	1200			20	1	600	EX SR	32
33	**RM B-105 PC RECEPTACLES**	*	**720**	**20**	**1**		1320		20	1	600	EX SR	34
35	**RM B-104 PC RECEPTACLES**	*	**720**	**20**	**1**			1320	20G	1	600	EX EXISTING LOAD	36
37	**RM B-103 PC RECEPTALCES**	*	**720**	**20**	**1**	820			**20**	**1**	**100**	* **EXHAUST FAN 'EF-1' & 'EF-2'**	38
39	REC in Ceiling	EX	600	20	1		1200		20	1	600	EX EXISTING LOAD	40
41	REC in Ceiling	EX	600	20	1			1200	20	1	600	EX EXISTING LOAD	42

TOTAL CONNECTED LOAD	17680	5740	5400	6540
TOTAL AMPERES	49.1	47.8	45.0	54.5
FEEDER SIZE EXISTING				
TOTAL DEMAND LOAD	17400			
TOTAL DEMAND AMPERES	48.333			

EX - EXISTING CIRCUIT TO REMAIN
* - INDICATES RE-USE EXISTING CIRCUIT BREAKER
SP - THIS SHOULD BECOME SPARE AFTER DEMOLITION. EC SHALL CONFIRM.

PANELBOARD LOADING SCHEDULE	VOLTS 208/120V	PANEL No. OP	NEW
RECESSED	PHASE 3	TYPE	
Optical	WIRE 4	MAINS: 70/3 MCB	

CKT No.	LOAD DESCRIPTION		VA	AMPS	POLE	A	B	C	AMPS	POLE	VA	LOAD DESCRIPTION	CKT No.
1	OPTICS LAB COUNTER REC		360	20	1	660			20	1	300	DISPLAY CASES	2
3	OPTICS LAB COUNTER REC		360	20	1		660		20	1	300	DISPLAY CASES	4
5	OPTICS LAB COUNTER REC		360	20	1			540	20	1	180	FLOOR BOX RECEPTACLE	6
7	OPTICS LAB COUNTER REC		360	20	1	610			20	1	250	SIGNAGE	8
9	OPTICS LAB COUNTER REC		360	20	1		360					SPARE	10
11	CONV RECEPTACLES		540	20	1			540				SPARE	12
13	SPARE			20	1	0						SPARE	14
15	SPARE			20	1		0					SPARE	16
17	SPARE			20	1			0				SPARE	18
19	SPARE			20	1	0						SPARE	20
21	SPARE			20	1		0					SPARE	22
23	SPARE			20	1			0				SPARE	24

TOTAL CONNECTED LOAD	3370	1270	1020	1080
TOTAL AMPERES	9.4	10.6	8.5	9.0
FEEDER SIZE REFER TO DRAWINGS				
TOTAL DEMAND LOAD	3370			
TOTAL DEMAND AMPERES	9.3611			

PANELBOARD LOADING SCHEDULE	VOLTS 480/277V	PANEL No. X	NEW
SURFACE MOUNTED	PHASE 3	TYPE	
	WIRE 4	MAINS: 225A MLO	

CKT No.	LOAD DESCRIPTION		VA	AMPS	POLE	A	B	C	AMPS	POLE	VA	LOAD DESCRIPTION	CKT No.
1	**RETAIL SALES LTG N/E END**		**3999**	**20**	**1**	5534			**20**	**1**	**1535**	**NIGHT LTG SALES AREA**	2
3	**RETAIL SALES LTG N/E END**		**3255**	**20**	**1**		5455		**20**	**1**	**2200**	**CORNICE LTG SALES AREA**	4
5	**RETAIL SALES LTG MID**		**3999**	**20**	**1**			4899	**20**	**1**	**900**	**BACK OF HOUSE OFF LTG**	6
7	**RETAIL SALES LTG MID**		**4185**	**20**	**1**	5355			**20**	**1**	**1170**	**OFFICE LGHTING**	8
9	**RETAIL SALES LTG S/E END**		**4092**	**20**	**1**		4092		20	1		SPARE	10
11	**RETAIL SALES LTG S/E END**		**2325**	**20**	**1**			2325	20	1		SPARE	12
13	SPARE			20	1	0			20	1		SPARE	14
15	SPARE			20	1		0		20	1		SPARE	16
17	SPARE			20	1			0	20	1		SPARE	18
19	SPARE			20	1	0			20	1		SPARE	20
21	SPARE			20	1		0		20	1		SPARE	22
23	SPARE			20	1			0	20	1		SPARE	24
25	SPARE			20	1	0			20	1		SPARE	26
27	SPARE			20	1		0		20	1		SPARE	28
29	SPARE			20	1			0	20	1		SPARE	30
31	SPARE			20	1	0			20	1		SPARE	32
33	SPARE			20	1		0		20	1		SPARE	34
35	SPARE			20	1			0	20	1		SPARE	36
37	SPARE			20	1	19663					**19663**		38
39	SPARE			20	1		19683		**100**	**3**	**19683**	**45KVA TRANSFORMER**	40
41	SPARE			20	1			16763			**16763**	**FEEDING L-3A & L-3B**	42

TOTAL CONNECTED LOAD	83769	30552	29230	23987
TOTAL AMPERES	100.8	254.6	243.6	199.9
FEEDER SIZE REFER TO DRAWINGS				
TOTAL DEMAND LOAD	79462			
TOTAL DEMAND AMPERES	95.622			

PANELBOARD LOADING SCHEDULE	VOLTS 480/277V	PANEL No. Y	EXISTING
SURFACE MOUNTED	PHASE 3	TYPE SQ D NEHB	
Stair to Mezz	WIRE 4	MAINS: 100A MLO	

CKT No.	LOAD DESCRIPTION		VA	AMPS	POLE	A	B	C	AMPS	POLE	VA	LOAD DESCRIPTION	CKT No.
1	**LTG - OFFICE AND BATHRM**	**	**2385**	**20**	**1**	5268			**20**	**1**	**2883**	* **LTG - MALL OF HEROS**	2
3	**LTG - ANTHONY & CHARLEY**	*	**2115**	**20**	**1**		2715		20	1	600	EX LTG - Penthouse	4
5	LTG - Fertilizer Storage	EX	600	20	1			3483	**20**	**1**	**2883**	* **LTG - MALL OF HEROS**	6
7	**LTG - OPTICAL & DUNKIN**	**	**1638**	**20**	**1**	8289					**6651**		8
9	**LTG - BARBER & GNC**	*	**3162**	**20**	**1**		9813		**35**	**3**	**6651**	** **EWH - DD SPACE**	10
11	**EMERG. LTG**	**	**2798**	**20**	**1**			9449			**6651**		12
13						0							14
15	Transformer - T-4	EX		50	3		0		50	3		EX Transformer - T-2	16
17								0					18

TOTAL CONNECTED LOAD	39017	13557	12528	12932
TOTAL AMPERES	47.0	113.0	104.4	107.8
FEEDER SIZE EXISTING				
TOTAL DEMAND LOAD	43783			
TOTAL DEMAND AMPERES	52.687			

EX - EXISTING CIRCUIT TO REMAIN
*RE-USE EXISTING CIRCUIT BREAKER.
**PROVIDE NEW CIRCUIT BREAKER AS INDICATED.

PANELBOARD LOADING SCHEDULE	VOLTS 480/277V	PANEL No. Z	EXISTING
RECESSED	PHASE 3	TYPE SQ D NH1B	
Stock Room	WIRE 4	MAINS: 225A MLO	

CKT No.	LOAD DESCRIPTION		VA	AMPS	POLE	A	B	C	AMPS	POLE	VA	LOAD DESCRIPTION	CKT No.
1	Mechanical Room	EX	600	20	1	1200			20	1	600	LTG - Office Area	2
3	**RETAIL SALES LTG SOUTH**	*	**3255**	**20**	**1**		3855		20	1	600	LTG - Office Area	4
5	**RETAIL SALES LTG SOUTH**	*	**2046**	**20**	**1**			2046	20	1		Spare	6
7	"Bank Lights"	EX	600	20	1	7500					6900		8
9	**ODL LIGHTING**	*	**2736**	**20**	**1**		12168		70	3	9432	Transformer - T-1	10
11	**NIGHT LTG SALES SOUTH**	*	**1556**	**20**	**1**			11268			9712		12
13	**ODL SCONCES**	**	**600**	**20**	**1**	600						Space	14
15	**ODL EMPLOYEE LTG**	**	**540**	**20**	**1**		540					Space	16
17	Space							0				Space	18

TOTAL CONNECTED LOAD	39177	9300	16563	13314
TOTAL AMPERES	47.1	77.5	138.0	111.0
FEEDER SIZE EXISTING				
TOTAL DEMAND LOAD	35826			
TOTAL DEMAND AMPERES	43.112			

EX - EXISTING CIRCUIT TO REMAIN
*RE-USE EXISTING CIRCUIT BREAKER.
**PROVIDE NEW CIRCUIT BREAKER AS INDICATED.

DATES AND REVISIONS

No.	Date/Description
	04.11.12 – BID

EXCHANGE™

RICHARD L. BOWEN + ASSOCIATES INC.
13000 Shaker Boulevard / Cleveland, Ohio 44120
Phone: (216) 491-9300 Fax: (216) 491-8053
www.rlba.com - email@rlba.com

FT. MYER EXCHANGE
JBM/HH - MYER
ARLINGTON, VIRGINIA

PANEL SCHEDULES

DRAWN BY: CAR
CHECKED BY: GSS
RLB NO.: 7800.02

DRAWING NO.
E6.2

P:\7800\7800.02 FT. MYER PX IMAGE UPGRADE CONST. CONTRACT DOCS\ELEC\7800002_E06-02.DWG | PLOTTED 04.27.2012 08:08AM BY CASEY RODDIS

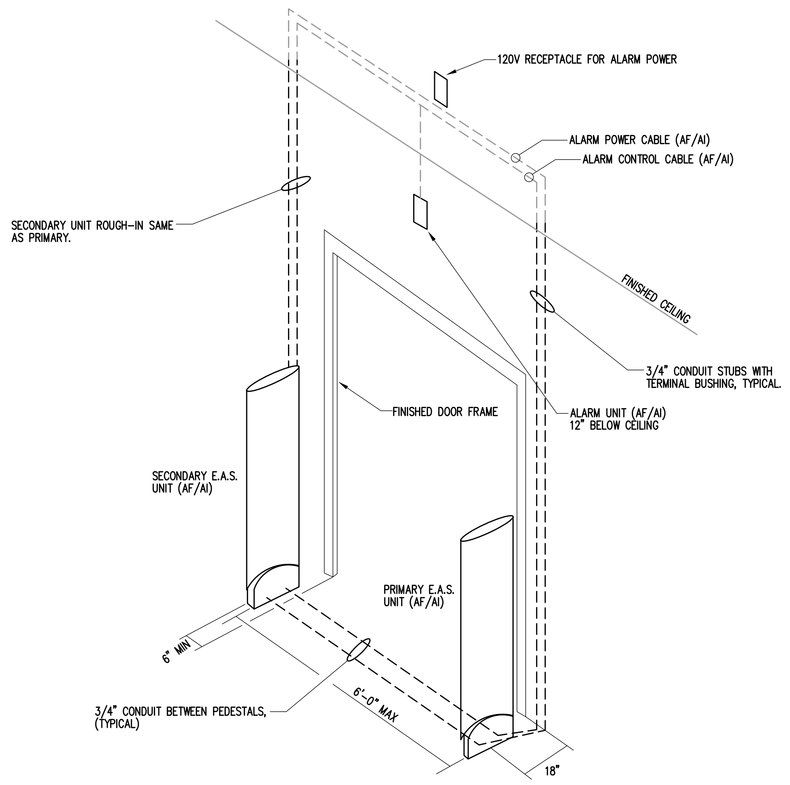

1 / E7.0 EAS SYSTEM ROUGH-IN
SCALE: NTS

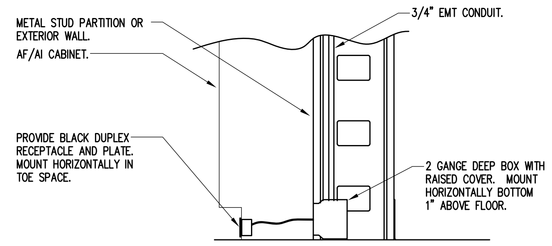

3 / E7.0 RECEPTACLE AT TOE SPACE
SCALE: NTS

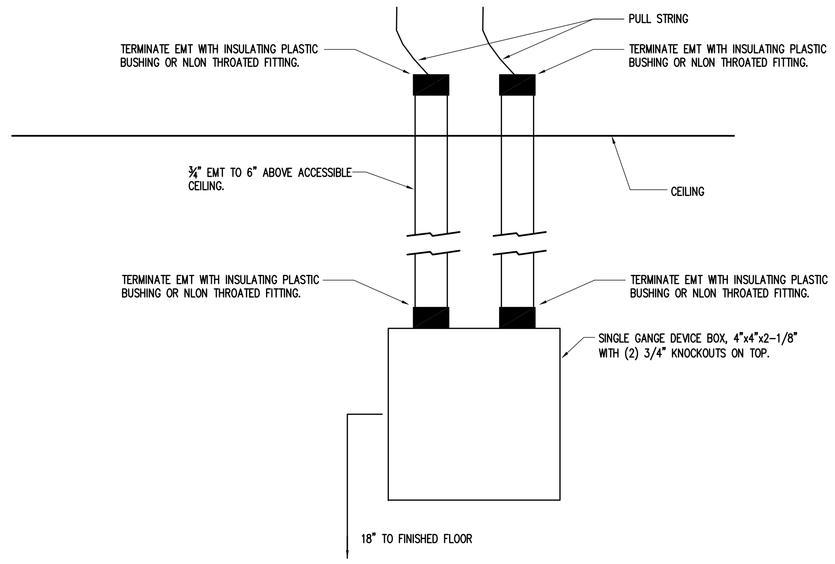

6 / E7.0 COMMUNICATIONS ROUGH-IN DETAIL
SCALE: NTS

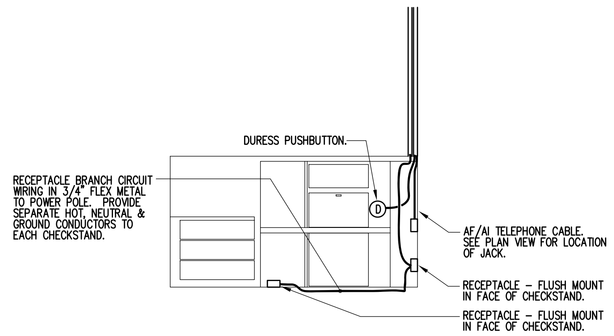

4 / E7.0 CASH REGISTER DETAILS
SCALE: NTS

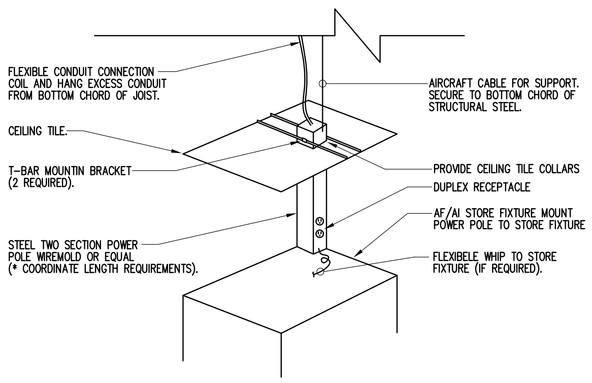

2 / E7.0 POWER POLE DETAIL
SCALE: NTS

POWER POLE GENERAL NOTES:

1. PROVIDE ADDITIONAL 10 POWER POLES WITH ALL ACCESSORIES AND FLEX CONDUIT WHIP WITH BRANCH CIRCUIT CONDUTCTORS TO AAFES FOR THEIR USE. INCLUDE HAND RECEIPT IN O&M MANUAL AT COMPLETION OF PROJECT.
2. LOCATE POWER POLES AFTER STORE FIXTURIZATION HAS BEEN COMPLETED. ADJUST POWER POLE LOCATIONS AS REQUIRED FOR COORDINATION WITH STORE FIXTURES WITHOUT COST TO AAFES.
3. EACH POWER POLE SHALL HAVE ADDITIONAL 25' EXCESS FLEXIBLE CONDUIT COILED AND HUNG ON J-HOOK ATTACHED TO ROOF JOIST FOR COILED CABLE.
4. PROVIDE ALL REQUIRED HARDWARE FOR MOUNTING POWER POLE TO STORE FIXTURES.
5. COORDINATE POLE HEIGHT SELECTION WITH AAFES STORE FIXTURES PRIOR TO ORDERING.
6. MAKE FINAL CONNECTIONS TO STORE FIXTURES/EQUIPMENT.
7. PROVIDE POWER POLES WITH CUSTOM COLOR - WILSON ART DESIGNER WHITE #D354-060 IN RETAIL SALES AREA OTHER THAN ELECTRONICS. POWER POLES IN ELECTRONICS SHALL BE BLACK #1595-60.
8. SEE POWER PLANS FOR TYPE OF CONNECTION AND NUMBER OF BRANCH CIRCUITS REQUIRED AT EACH LOCATION.

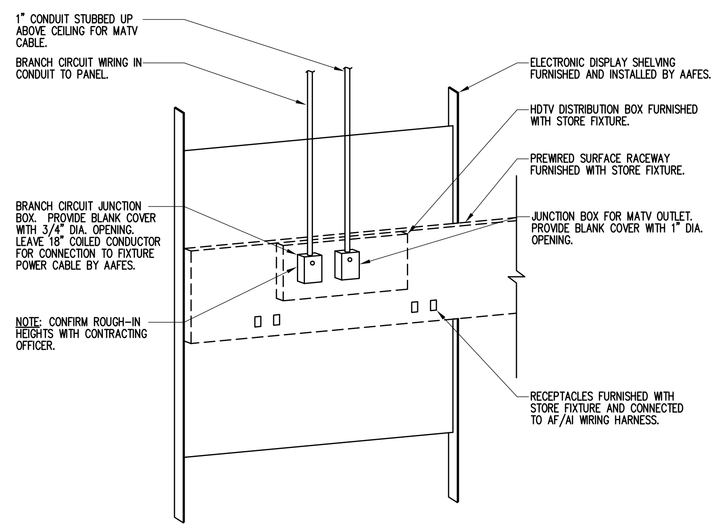

5 / E7.0 ELECTRONIC SHELVING DISPLAY
SCALE: NTS

DATES AND REVISIONS	
No.	Date/Description
	04.11.12 - BID

EXCHANGE™

RICHARD L. BOWEN + ASSOCIATES INC.
13000 Shaker Boulevard / Cleveland, Ohio 44120
Phone: (216) 491-9300 Fax: (216) 491-9053
www.rlba.com - email@rlba.com

FT. MYER EXCHANGE
JBMHH - MYER
ARLINGTON, VIRGINIA

ELECTRICAL DETAILS

DRAWN BY: CAR
CHECKED BY: GSS
RLB NO.: 7800.02

DRAWING NO.
E7.0

P:\7800\7800.02 FT. MYER PX IMAGE UPGRADE CONST. CONTRACT DOCS\ELEC\7800.02_E07-00.DWG | PLOTTED 04.06.2012 10:57AM BY CASEY RODDIS