ABBREVIATIONS

ACOUST.	–	ACOUSTICAL
AF/AI	–	AAFES FURNISHED/ AFFES INSTALLED
AF/CI	–	AAFES FURNISHED/ CONTRACTOR INSTALLED
A.C.U.M.	–	ARCHITECTURAL CONCRETE MASONRY UNIT
A.F.F.	–	ABOVE FINISH FLOOR
ALUM.	–	ALUMINUM
ARCH.	–	ARCHITECTURAL
ATTEN.	–	ATTENUATION
BOT.	–	BOTTOM
CH	–	COAT HOOK
CONC.	–	CONCRETE
C.G.	–	CORNER GUARD
C.J.	–	CONTROL JOINT
℄	–	CENTER LINE
CMU	–	CONCRETE MASONRY UNIT
D.S.	–	DOWNSPOUT
DN	–	DOWN
EA.	–	EACH
ELEC.	–	ELECTRICAL
E.J.	–	EXPANSION JOINT
EQ.	–	EQUAL
EWC	–	ELECTRIC WATER COOLER
EXIST.	–	EXISTING
EXT.	–	EXTERIOR
F.E.C.	–	FIRE EXTINGUISHER CABINET
FD	–	FLOOR DRAIN
FIN.	–	FINISH
F.R.	–	FIRE RESISTANT
F.S.	–	FLOOR SINK
FT.	–	FOOT
G.C.	–	GENERAL CONTRACTOR
GYP. BD.	–	GYPSUM BOARD
GPM	–	GALLONS PER MINUTE
H.M.	–	HOLLOW METAL
HT.	–	HEIGHT
INSUL.	–	INSULATION
INT.	–	INTERIOR
MANUF.	–	MANUFACTURER
MECH.	–	MECHANICAL
M.O.	–	MASONRY OPENING
MIN.	–	MINIMUM
M.R.	–	MOISTURE RESISTANT
M.T.	–	METAL THRESHOLD
N.I.C.	–	NOT IN CONTRACT
N.T.S.	–	NOT TO SCALE
NO.	–	NUMBER
O.C.	–	ON CENTER
P.E.J.	–	PREMOULDED EXPANSION JOINT
PLUMB.	–	PLUMBING
REF.	–	REFRIGERATOR
REINF.	–	REINFORCING
SCHED.	–	SCHEDULE
SIM.	–	SIMILAR
STOR.	–	STORAGE
STRUCT.	–	STRUCTURAL
THRESH	–	THRESHOLD
TYP.	–	TYPICAL
VCT	–	VINYL COMPOSITION TILE
VTR	–	VENT THROUGH ROOF
W/	–	WITH
W.H.	–	WALL HYDRANT

LOCATION MAP

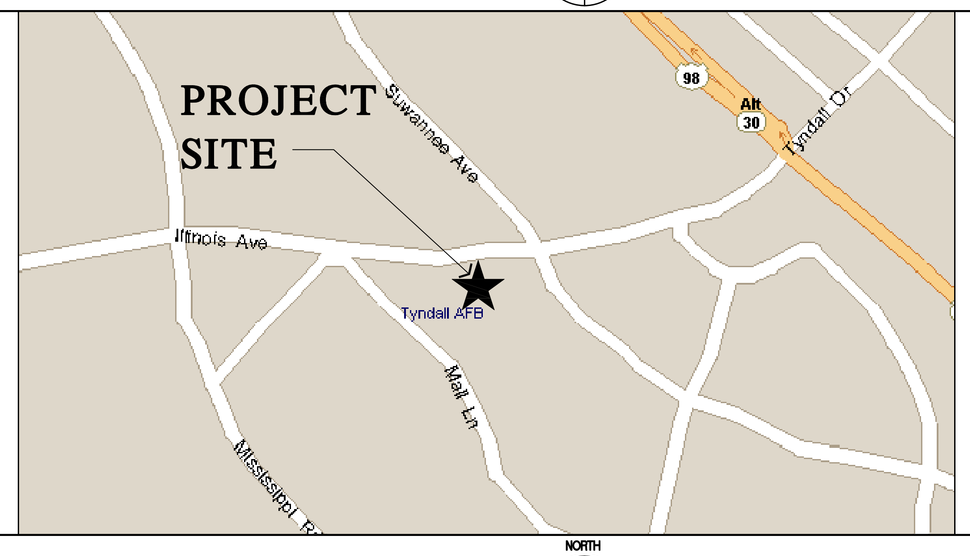

VICINITY MAP

TYNDALL AFB, FLORIDA
CONSTRUCT SHOPPETTE / FOOD/ CLASS6 / GAS

AAFES PROJECT NO. 0941-09-000003

FOR SOLICITATION

ARCHITECT
Parsons Wible Brummal Alkire / Architects, Inc.
Montgomery, Alabama
PHONE NO. 334-244-4990

CIVIL ENGINEER
Gonzalez-Strength & Associates, Inc.
Hoover, Alabama
PHONE NO. 205-942-2486

STRUCTURAL ENGINEER
Blackburn and Associates, Inc.
Lowndesboro, Alabama
PHONE NO. 334-265-0206

MECHANICAL ENGINEER
BBG & S Engineering Consultants, Inc.
Birmingham, Alabama
PHONE NO. 205-969-4550

ELECTRICAL ENGINEER
Advanced Engineering Concepts, Inc.
Montgomery, Alabama
PHONE NO. 334-260-0740

FUEL SYSTEMS ENGINEER
Johnson Spellman & Associates, Inc.
Norcross, Georgia
PHONE NO. 678-336-5406

INDEX TO DRAWINGS

SHEET NUMBER	SHEET TITLE
GENERAL	
T001	TITLE SHEET, INDEX, VICINITY & LOCATION MAPS
CIVIL	
C100	TOPOGRAPHIC SURVEY
C101	SITE DEMOLITION PLAN
C201	SITE LAYOUT PLAN
C202	SITE PHASING PLAN
C203	SEPARATELY PRICED PAVING AREA PLAN
C301	SITE GRADING PLAN
C302	SWPPP PLAN
C401	SITE UTILITY PLAN
C501	SECTIONS & DETAILS
C502	SECTIONS & DETAILS
C503	SECTIONS & DETAILS
C504	SECTIONS & DETAILS
C505	MONITOR WELL SECTIONS, DETAILS, & NOTES
LANDSCAPE	
L100	LANDSCAPE PLAN
LIFE SAFETY	
LS100	LIFE SAFETY PLAN
ARCHITECTURAL	
A101	FLOOR PLAN
A102	REFLECTED CEILING PLAN
A103	ROOF PLAN & DETAILS
A201	EXTERIOR ELEVATIONS
A202	EXTERIOR ELEVATIONS
A301	BUILDING SECTION & DETAILS
A302	WALL SECTIONS
A303	WALL SECTIONS
A304	SECTIONS & DETAILS
A401	SNACK AVENUE PLAN & SCHEDULE, TOILET ELEVATIONS & SCHEDULE
A402	BUMPIE EQUIPMENT PLAN & SCHEDULES
A403	INTERIOR ELEVATIONS & SECTIONS
A600	FINISH SCHEDULE AND LEGENDS
A601	DOOR SCHEDULE, DOOR FRAME & CURTAIN WALL TYPES, DOOR DETAILS
EQ101	EQUIPMENT PLAN

SHEET NUMBER	SHEET TITLE
STRUCTURAL	
S001	GENERAL NOTES SCHEDULES TYPICAL DETAILS
S101	FOUNDATION PLAN
S102	ROOF FRAMING PLAN
S201	SECTIONS AND DETAILS
S202	SECTIONS AND DETAILS
PLUMBING	
P100	PLUMBING DETAILS, LEGEND, SCHEDULES, NOTES & RISERS
P101	PLUMBING FLOOR PLAN - NONPRESSURE PIPING
P102	PLUMBING FLOOR PLAN - PRESSURE PIPING
MECHANICAL	
M100	LEGENDS, SCHEDULES & NOTES
M101	HVAC NEW WORK PLAN
M102	MECHANICAL DETAILS

SHEET NUMBER	SHEET TITLE
ELECTRICAL	
E0.01	ELECTRICAL SYMBOLS, LEGEND & NOTES
E0.02	ELECTRICAL RISER & MAIN PANEL SCHEDULE
E0.03	ELECTRICAL DETAILS
E1.01	ELECTRICAL SITE PLAN
E2.01	ELECTRICAL LIGHTING PLAN
E3.01	ELECTRICAL POWER PLAN
E3.02	LARGE SCALE FOOD SERVICE POWER PLANS
E4.01	ELECTRICAL COMMUNICATIONS PLAN
E5.01	EMERGENCY PROTECTION SYSTEM PLAN
E6.01	EMERGENCY PROTECTION SYSTEM PLAN
FUEL SYSTEM	
T - 1	PRODUCT PIPING AND DISPENSER DEMOLITION PLAN VIEW
T - 2	FUEL STORAGE SYSTEM NEW WORK - PLAN VIEW
T - 3	PETROLEUM PIPING ISOMETRIC
T - 4	FUEL STORAGE TANK DEMOLITION DETAILS
T - 5	FUEL STORAGE TANK NEW WORK DETAILS
T - 6	FUEL STORAGE SYSTEM MISCELLANEOUS DETAILS
T - 7	FUEL STORAGE SYSTEM MISCELLANEOUS DETAILS
T - 8	BILL OF MATERIALS CHART
T - 9	VEEDER-ROOT TLS-450 SCHEMATIC
T - 10	PETROLEUM/ELECTRICAL SCHEMATICS
T - 11	FUEL CANOPY PLAN & ELEVATIONS

AAFES Real Estate Directorate
AAFES (RE-C) P.O.BOX 660320 DALLAS, TX 75266-0320

KEY PLAN:

DATE	REVISION NO. & DESCRIPTION	BY

STATE OF ALABAMA · MONTGOMERY · EDWARD BRUMMAL ALKIRE · ALABAMA REGISTERED ARCHITECT

PARSONS WIBLE BRUMMAL ALKIRE / ARCHITECTS INC.
MONTGOMERY, ALABAMA

DESIGN BY:

CHECKED BY:
EMB

RECOMMENDED: DATE

APPROVED: DATE

ARMY & AIR FORCE EXCHANGE SERVICE
DEPARTMENTS OF THE ARMY & AIR FORCE

RE-C
REAL ESTATE DIRECTORATE

PROJECT:
TYNDALL AFB
CONSTRUCT SHOPPETTE/
FOOD/CLASS 6/GAS

TYNDALL AFB,
FLORIDA

DRAWING TITLE:
TITLE SHEET, INDEX,
VICINITY & LOCATION MAPS

DATE:	SCALE:	SHEET:
18 JAN. 2012	N/A	T001

DRAWING PROJECT NO.
0941-09-000003

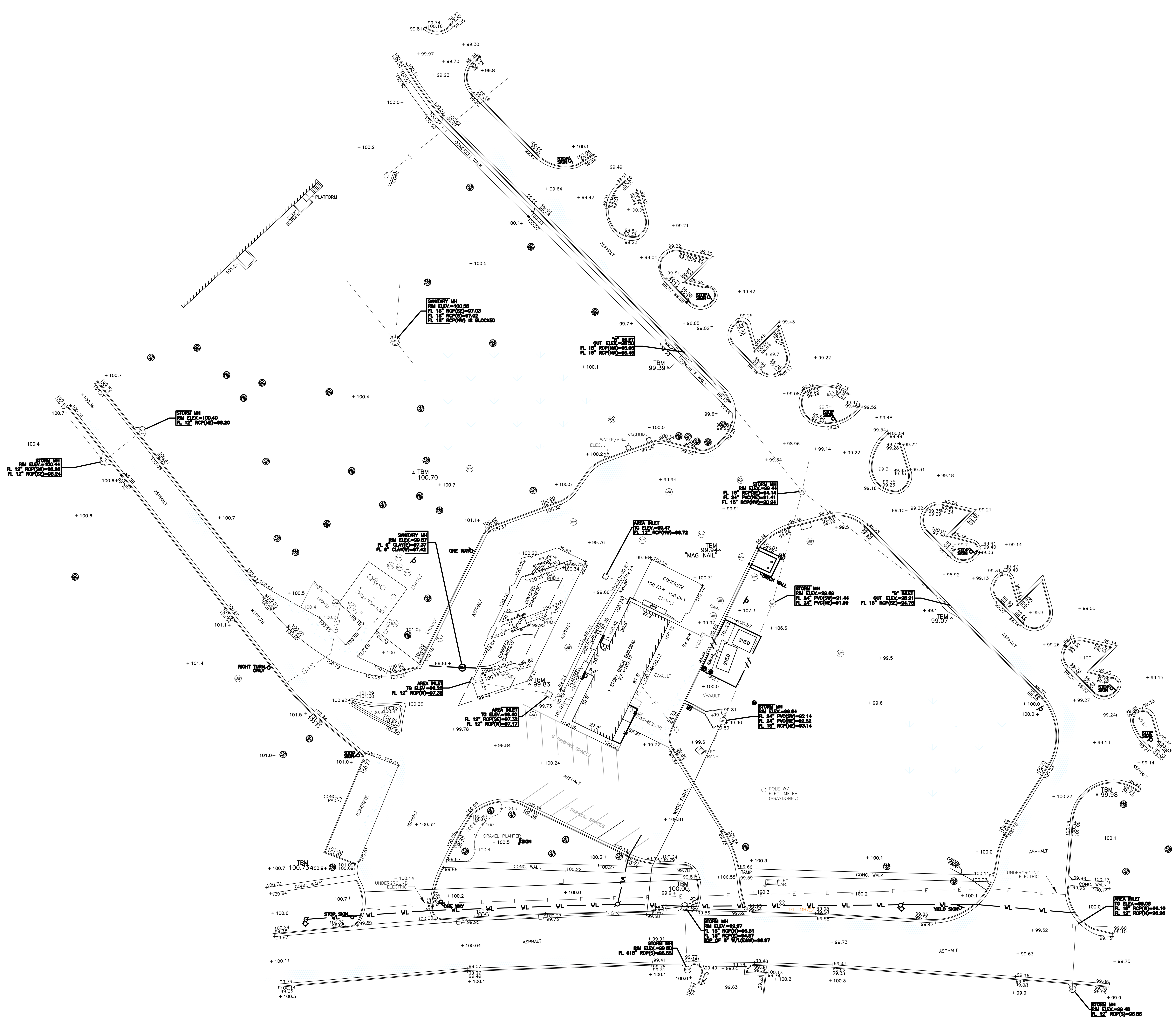

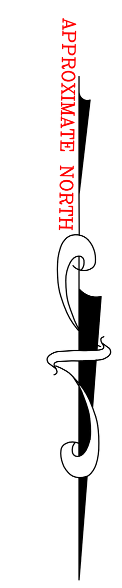

30 15 0 30 60 90

NOTES:

1. The surveyor has not abstracted the subject property.
2. This survey was prepared without the benefit of a title commitment.
3. Elevations shown hereon are based on an assumed datum.
4. TBM's shown hereon are 60D nails, unless otherwise noted.

LEGEND

WOOD FENCE
CHAIN LINK FENCE
WROUGHT IRON FENCE
OVERHEAD ELECTRIC
WATERLINE
GAS LINE
TELEPHONE LINE
EASEMENT
AERIAL EASEMENT
BUILDING LINE
PARKING SETBACK
CENTER OF SWALE
TOP OF BANK

+45.6 EXIST. NATURAL GROUND ELEVATION

+45.67 EXIST. ASPHALT OR CONCRETE ELEVATION

IRON ROD SET/FIND
POWER POLE
GUY ANCHOR
MANHOLE
MONITORING WELL
CLEANOUT
GATE VALVE & BOX
FIRE HYDRANT
WATER METER
TELEPHONE PEDESTAL
CABLE EQUIPMENT
LS LIGHT STANDARD
LIGHT
TRAFFIC SIGN
TREE
PIPE BOLLARD
F.O.C. FIBER OPTIC CABLE
M.H. MANHOLE
I.C.V. IRRIGATION CONTROL VALVE
CURB LINE
EDGE ASPHALT
CURB INLET
AREA INLET
EDGE OF BUILDING

45.67 TOP OF CURB ELEVATION
45.17 GUTTER ELEVATION

PLAT OF SURVEY

PARTIAL TOPOGRAPHY
OF
TYNDALL AIR FORCE BASE

Gruller Surveying, LLC
PROFESSIONAL LAND SURVEYING
5599 SAN FELIPE DR. SUITE 1420
HOUSTON, TEXAS 77056

SCALE: 1" = 30'	FIELD BOOK: 2009-30	DATE: 08-03-2009
	LOCATION: FLORIDA	
PHONE: (713) 333-1466	DWG. NO. 03-0905.DWG	

AAFES Real Estate Directorate
AAFES (RE-C) P.O.BOX 660320 DALLAS, TX 75266-0320

KEY PLAN:

DATE	REVISION NO. & DESCRIPTION	BY

STATE OF ALABAMA · REGISTERED ARCHITECT · EDWARD BRUMMAL JR. · MONTGOMERY · ALABAMA

PARSONS WIBLE BRUMMAL ALKIRE / ARCHITECTS INC.
MONTGOMERY, ALABAMA

DESIGN BY:

CHECKED BY:

RECOMMENDED: DATE

APPROVED: DATE

ARMY & AIR FORCE EXCHANGE SERVICE
DEPARTMENTS OF THE ARMY & AIR FORCE

RE-C
REAL ESTATE DIRECTORATE

PROJECT:
TYNDALL AFB
CONSTRUCT SHOPPETTE/
FOOD/CLASS 6/GAS

TYNDALL AFB,
FLORIDA

DRAWING TITLE:
TOPOGRAPHIC SURVEY

DATE:	SCALE:	SHEET:
18 JAN. 2012	AS NOTED	C100
DRAWING PROJECT NO. 0941-09-000003		

GONZALEZ - STRENGTH & ASSOCIATES, INC.
ENGINEERING, LAND PLANNING, & SURVEYING
2176 PARKWAY LAKE DRIVE
HOOVER, ALABAMA 35244
PHONE: (205) 942-2486
FAX: (205) 942-3033
Gonzalez-Strength.com
© Copyright 2006

G.S.A. JOB NO. 09PVB35

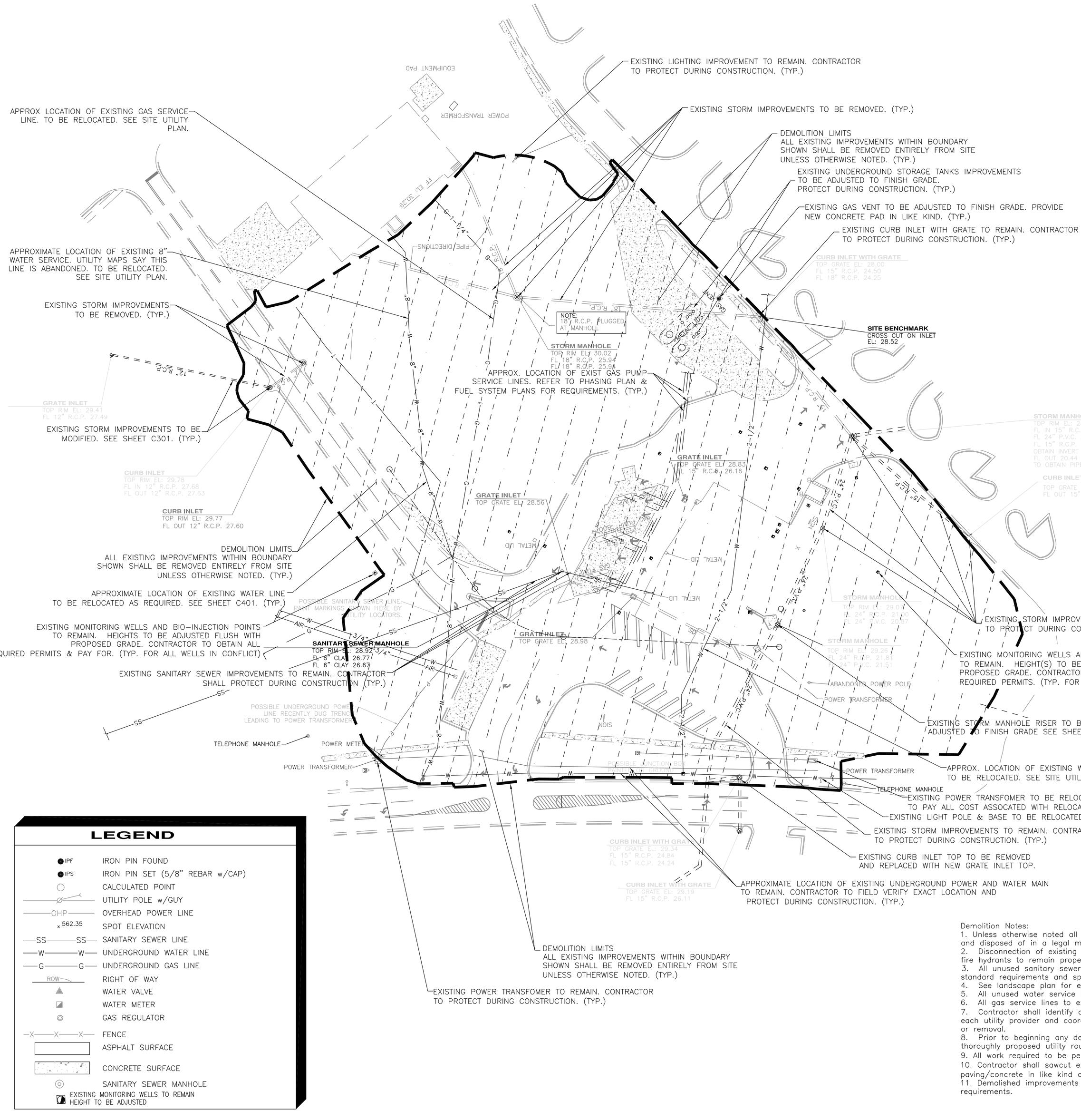

NOTE: AS A FIRST ORDER OF BUSINESS AND PRIOR TO ANY WORK BEGINNING, THE CONTRACTOR SHALL HAVE ALL EXISTING UTILITIES ON AND ADJACENT TO THE SITE LOCATED. IT IS THE RESPONSIBILITY OF THE CONTRACTOR TO BE FAMILIAR WITH THE LOCATIONS OF THE UTILITIES AND AVOID ALL CONFLICTS. ANY SERVICE INTERRUPTIONS AND/OR ASSOCIATED COSTS ARE THE SOLE RESPONSIBILITY OF THE CONTRACTOR AND SHALL BE COORDINATED WITH THE CONTRACTING OFFICER PER PROJECT SPECIFICATIONS. THE EXISTING UTILITIES SHOWN HEREIN ARE TO BE CONSIDERED APPROXIMATE. THE CONTRACTOR SHALL COORDINATE ALL UTILITY ADJUSTMENTS WITH THE APPROPRIATE UTILITIES COMPANIES. ALL IMPROVEMENTS SHALL MEET THE REQUIREMENTS OF EACH COMPANY'S STANDARDS OR SPECIFICATIONS.

CONTRACTOR SHALL CONTACT MISSALL @ 1-800-292-8525 FOR LOCATION OF ALL UTILITIES, AT LEAST 72 HOURS PRIOR TO BEGINNING CONSTRUCTION

WATER & POWER PROVIDER
GULF COAST ELECTRIC CO-OPERATION (GCEC)
JIM VICKERS
850-481-1188

LEGEND

● IPF	IRON PIN FOUND
● IPS	IRON PIN SET (5/8" REBAR w/CAP)
○	CALCULATED POINT
—Ø—	UTILITY POLE w/GUY
—OHP—	OVERHEAD POWER LINE
x 562.35	SPOT ELEVATION
—SS—SS—	SANITARY SEWER LINE
—W—W—	UNDERGROUND WATER LINE
—G—G—	UNDERGROUND GAS LINE
ROW	RIGHT OF WAY
▲	WATER VALVE
◪	WATER METER
⊛	GAS REGULATOR
—X—X—X—	FENCE
	ASPHALT SURFACE
	CONCRETE SURFACE
⊙	SANITARY SEWER MANHOLE
◪	EXISTING MONITORING WELLS TO REMAIN HEIGHT TO BE ADJUSTED

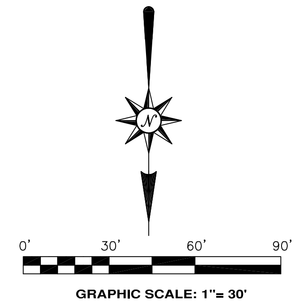

GRAPHIC SCALE: 1"= 30'

Demolition Notes:
1. Unless otherwise noted all improvements, utilities and structures inside limits of construction shall be removed and disposed of in a legal manner.
2. Disconnection of existing water services shall be coordinated with Tyndall AFB. All existing meters, boxes, and fire hydrants to remain property of Tyndall AFB.
3. All unused sanitary sewer laterals to be capped prior to demolition or grading, in accordance with Tyndall AFB standard requirements and specifications.
4. See landscape plan for exact trees to remain within tree save area.
5. All unused water service lines to be demolished shall be capped at mains.
6. All gas service lines to existing facilities to be demolished shall be capped at mains.
7. Contractor shall identify all overhead and underground utility services to be removed and/or relocated. Contact each utility provider and coordinate construction with all utility providers and pay all costs associated with relocation or removal.
8. Prior to beginning any demolition Contractor shall review the site utility plans so that they understand thoroughly proposed utility routes to properly sequence construction of demolition of utilities.
9. All work required to be performed by local utility companies shall be included in contractor's bid.
10. Contractor shall sawcut existing paving/concrete along construction limits. Contractor shall replace paving/concrete in like kind assuring a smooth transition and positive drainage.
11. Demolished improvements shall be hauled off and disposed of in a legal manner in accordance with Government requirements.

AAFES
Real Estate Directorate
AAFES (RE-C) P.O.BOX 660320 DALLAS, TX 75266-0320

KEY PLAN:

DATE	REVISION NO. & DESCRIPTION	BY

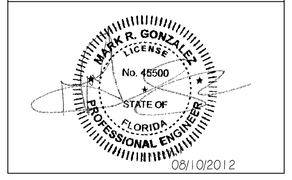

08/10/2012

PARSONS WIBLE BRUMMAL ALKIRE / ARCHITECTS INC.
MONTGOMERY, ALABAMA

DESIGN BY:
CHECKED BY:
RECOMMENDED: DATE
APPROVED: DATE

ARMY & AIR FORCE EXCHANGE SERVICE
DEPARTMENTS OF THE ARMY & AIR FORCE

RE-C
REAL ESTATE DIRECTORATE

PROJECT:
TYNDALL AFB
CONSTRUCT SHOPPETTE/ FOOD/CLASS6/GAS

TYNDALL, AFB
FLORIDA

DRAWING TITLE:
SITE DEMOLITION PLAN

DATE:	SCALE:	SHEET:
10 AUG 2012	1"=30'	C101

DRAWING PROJECT NO.
0941-09-000003

GONZALEZ - STRENGTH & ASSOCIATES, INC.
ENGINEERING, LAND PLANNING, & SURVEYING
2176 PARKWAY LAKE DRIVE
HOOVER, ALABAMA 35244
PHONE: (205) 942-2486
FAX: (205) 942-3033
Gonzalez-Strength.com
© Copyright 2006
G.S.A. JOB NO. 09PWB35

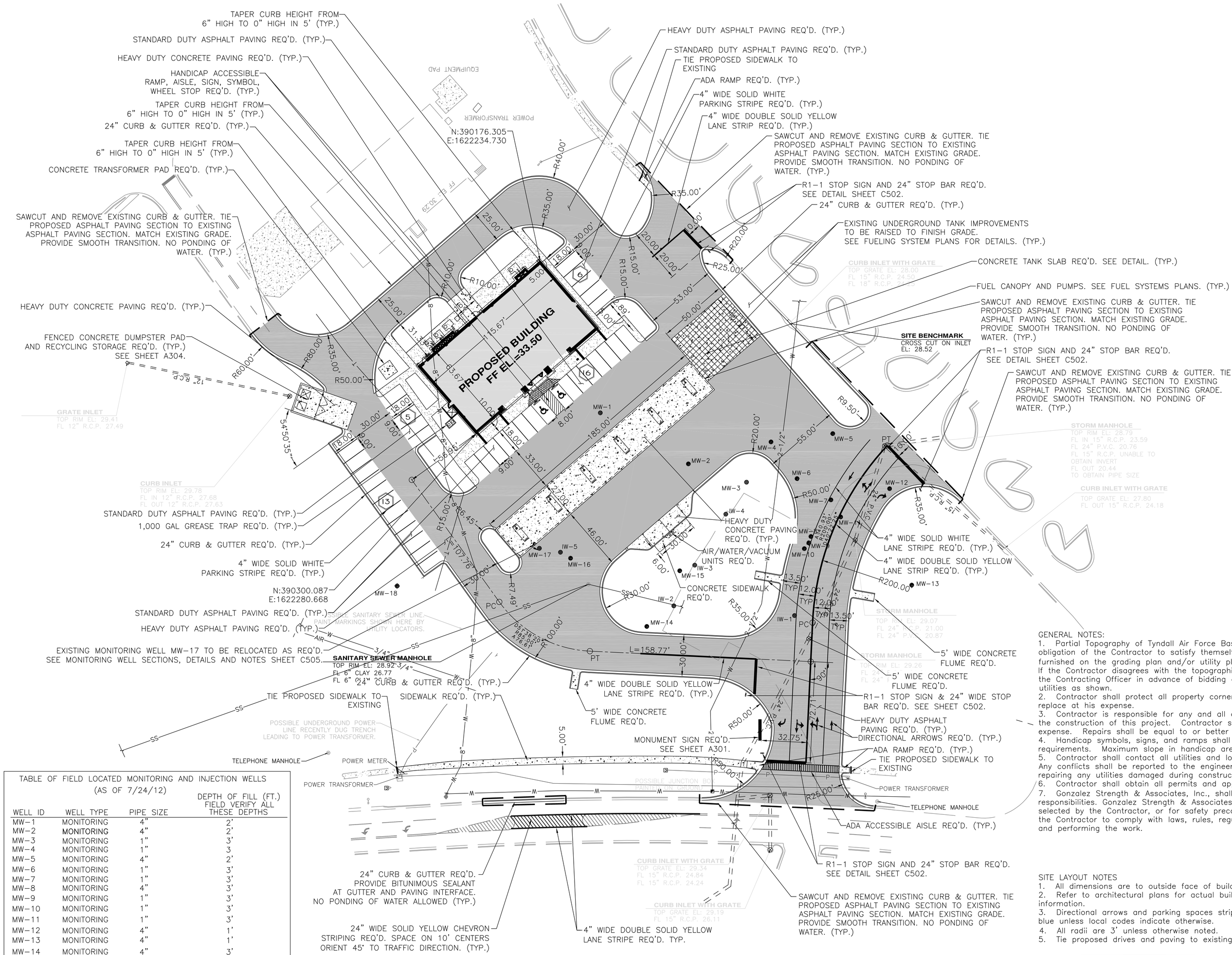

0' 30' 60' 90'
GRAPHIC SCALE: 1"= 30'

NOTE: FIRE SPRINKLER CERTIFICATION
CONTRACTOR SHALL PROVIDE A RECORD OF COMPLETION FOR THE FIRE ALARM AND SPRINKLER SYSTEM AND A TEST AND MATERIAL CERTIFICATION FOR ABOVE GROUND & BELOW GROUND PIPING FOR THE SPRINKLER SYSTEM TO THE CONTRACTING OFFICER.

GENERAL NOTES:
1. Partial Topography of Tyndall Air Force Base performed by Gonzalez-Strength & Associates, Inc. It shall be the obligation of the Contractor to satisfy themself as to the accuracy of the topographic survey and existing utilities furnished on the grading plan and/or utility plan by personal examination of the site and the existing conditions. If the Contractor disagrees with the topographic survey or the existing utility locations, they must notify in writing the Contracting Officer in advance of bidding or it is taken that the Contractor accepts the existing topography and utilities as shown.
2. Contractor shall protect all property corners and benchmark. If destroyed during construction, Contractor shall replace at his expense.
3. Contractor is responsible for any and all damage caused to existing improvements on site or off site due to the construction of this project. Contractor shall repair or replace any damaged existing improvements at their expense. Repairs shall be equal to or better than the existing conditions.
4. Handicap symbols, signs, and ramps shall be installed in accordance with Federal installation and ANSI 117 requirements. Maximum slope in handicap areas shall not exceed 2% in any direction.
5. Contractor shall contact all utilities and locate all utilities within the work area prior to starting construction. Any conflicts shall be reported to the engineer prior to starting construction. Contractor is responsible for repairing any utilities damaged during construction.
6. Contractor shall obtain all permits and approvals prior to beginning construction.
7. Gonzalez Strength & Associates, Inc., shall not have authority over the Contractor's work and/or responsibilities. Gonzalez Strength & Associates, Inc. is not responsible for methods or procedures of construction selected by the Contractor, or for safety precautions incident to the work of the Contractor, or for any failure of the Contractor to comply with laws, rules, regulations, ordinances, or codes applicable to the Contractor furnishing and performing the work.

SITE LAYOUT NOTES
1. All dimensions are to outside face of building, to face of curb, or edge of surfacing.
2. Refer to architectural plans for actual building dimensions, all utility tie-ins, bollard locations and other related information.
3. Directional arrows and parking spaces striping shall be white. Handicap parking striping and symbol shall be blue unless local codes indicate otherwise.
4. All radii are 3' unless otherwise noted.
5. Tie proposed drives and paving to existing pavements, matching grades and assuring smooth transitions.

TABLE OF FIELD LOCATED MONITORING AND INJECTION WELLS
(AS OF 7/24/12)

WELL ID	WELL TYPE	PIPE SIZE	DEPTH OF FILL (FT.) FIELD VERIFY ALL THESE DEPTHS
MW-1	MONITORING	4"	2'
MW-2	MONITORING	4"	2'
MW-3	MONITORING	1"	3'
MW-4	MONITORING	1"	3
MW-5	MONITORING	4"	2'
MW-6	MONITORING	1"	3'
MW-7	MONITORING	1"	3'
MW-8	MONITORING	4"	3'
MW-9	MONITORING	1"	3'
MW-10	MONITORING	1"	3'
MW-11	MONITORING	1"	3'
MW-12	MONITORING	4"	1'
MW-13	MONITORING	4"	1'
MW-14	MONITORING	4"	3'
MW-15	MONITORING	4"	1'
MW-16	MONITORING	4"	2'
MW-17	MONITORING	1"	2'
MW-18	MONITORING	4"	0'
IW-1	INJECTION	N/A	3'
IW-2	INJECTION	N/A	1'
IW-3	INJECTION	N/A	1'
IW-4	INJECTION	N/A	2'
IW-5	INJECTION	N/A	2'

NOTE: EXISTING MONITORING WELLS (MW) AND BIO-INJECTION POINTS (IW) TO REMAIN AND BE RAISED. SEE SHEET C505 FOR MW AND IW RAISING DETAILS AND NOTES

NOTE:
GENERAL CONTRACTOR SHALL MAKE A PHOTOGRAPHIC RECORD OF ALL EXISTING SITE CONDITIONS TO DOCUMENT EXISTING CONDITIONS PRIOR TO BEGINNING THE WORIK OF THIS CONTRACT. FURNISH A DIGITAL COPY OF THE PHOTOGRAPHIC RECORD TO THE CONTRACTING OFFICER AND THE A/E.

NOTE: AS A FIRST ORDER OF BUSINESS AND PRIOR TO ANY WORK BEGINNING, THE CONTRACTOR SHALL HAVE ALL EXISTING UTILITIES ON AND ADJACENT TO THE SITE LOCATED. IT IS THE RESPONSIBILITY OF THE CONTRACTOR TO BE FAMILIAR WITH THE LOCATIONS OF THE UTILITIES AND AVOID ALL CONFLICTS. ANY SERVICE INTERRUPTIONS AND/OR ASSOCIATED COSTS ARE THE SOLE RESPONSIBILITY OF THE CONTRACTOR AND SHALL BE COORDINATED WITH THE CONTRACTING OFFICER PER PROJECT SPECIFICATIONS. THE EXISTING UTILITIES SHOWN HEREIN ARE TO BE CONSIDERED APPROXIMATE. THE CONTRACTOR SHALL COORDINATE ALL UTILITY ADJUSTMENTS WITH THE APPROPRIATE UTILITIES COMPANIES. ALL IMPROVEMENTS SHALL MEET THE REQUIREMENTS OF EACH COMPANY'S STANDARDS OR SPECIFICATIONS.

LEGEND

EXISTING BUILDING LINE	PROPOSED SYMBOLS		EXISTING SYMBOLS
PROPOSED BUILDING LINE	HANDICAP	H.C.	IRON PIN SET
EXISTING IMPROVEMENTS	CENTERLINE	C OR C.L.	
PROPOSED FENCE	EDGE OF PAVEMENT	E/P OR E.O.P.	
PROPOSED CURB AND GUTTER	MINIMUM	MIN.	
PROPERTY LINE	NOT TO SCALE	N.T.S.	
NEW CONCRETE WALKS	RADIUS	R10	EXISTING ASPHALT PAVEMENT
HEAVY DUTY ASPHALT PAVING	RIGHT-OF-WAY	R.O.W.	EXISTING GRAVEL DRIVE
HEAVY DUTY CONCRETE	IRON PIN SET	I.P.S.	EXISTING CURB INLET
EXISTING MONITORING WELLS TO REMAIN HEIGHT TO BE ADJUSTED SEE SHEET C505	NO. OF PARKING SPACES	9	
	HANDICAP PARKING		
	UTILITY POLE		
	SIGN		
	POINT OF TANGENT	PT	
	POINT OF CURVATURE	PC	

AAFES Real Estate Directorate
AAFES (RE-C) P.O.BOX 660320 DALLAS, TX 75266-0320

KEY PLAN:

DATE	REVISION NO. & DESCRIPTION	BY

MARK R. GONZALEZ LICENSE No. 48500 STATE OF FLORIDA PROFESSIONAL ENGINEER
06/10/2012

PARSONS WIBLE BRUMMAL ALKIRE / ARCHITECTS INC.
MONTGOMERY, ALABAMA

DESIGN BY:
CHECKED BY:
RECOMMENDED: DATE
APPROVED: DATE

ARMY & AIR FORCE EXCHANGE SERVICE
DEPARTMENTS OF THE ARMY & AIR FORCE
RE-C
REAL ESTATE DIRECTORATE

PROJECT:
TYNDALL AFB
CONSTRUCT SHOPPETTE/ FOOD/CLASS6/GAS
TYNDALL, AFB
FLORIDA

DRAWING TITLE:
SITE LAYOUT PLAN

DATE:	SCALE:	SHEET:
10 AUG 2012	1"=30'	C201

DRAWING PROJECT NO.
0941-09-000003

GONZALEZ - STRENGTH & ASSOCIATES, INC.
ENGINEERING, LAND PLANNING, & SURVEYING
2176 PARKWAY LAKE DRIVE
HOOVER, ALABAMA 35244
PHONE: (205) 942-2486
FAX: (205) 942-3033
Gonzalez-Strength.com
© Copyright 2006

G.S.A. JOB NO. 09PWB35

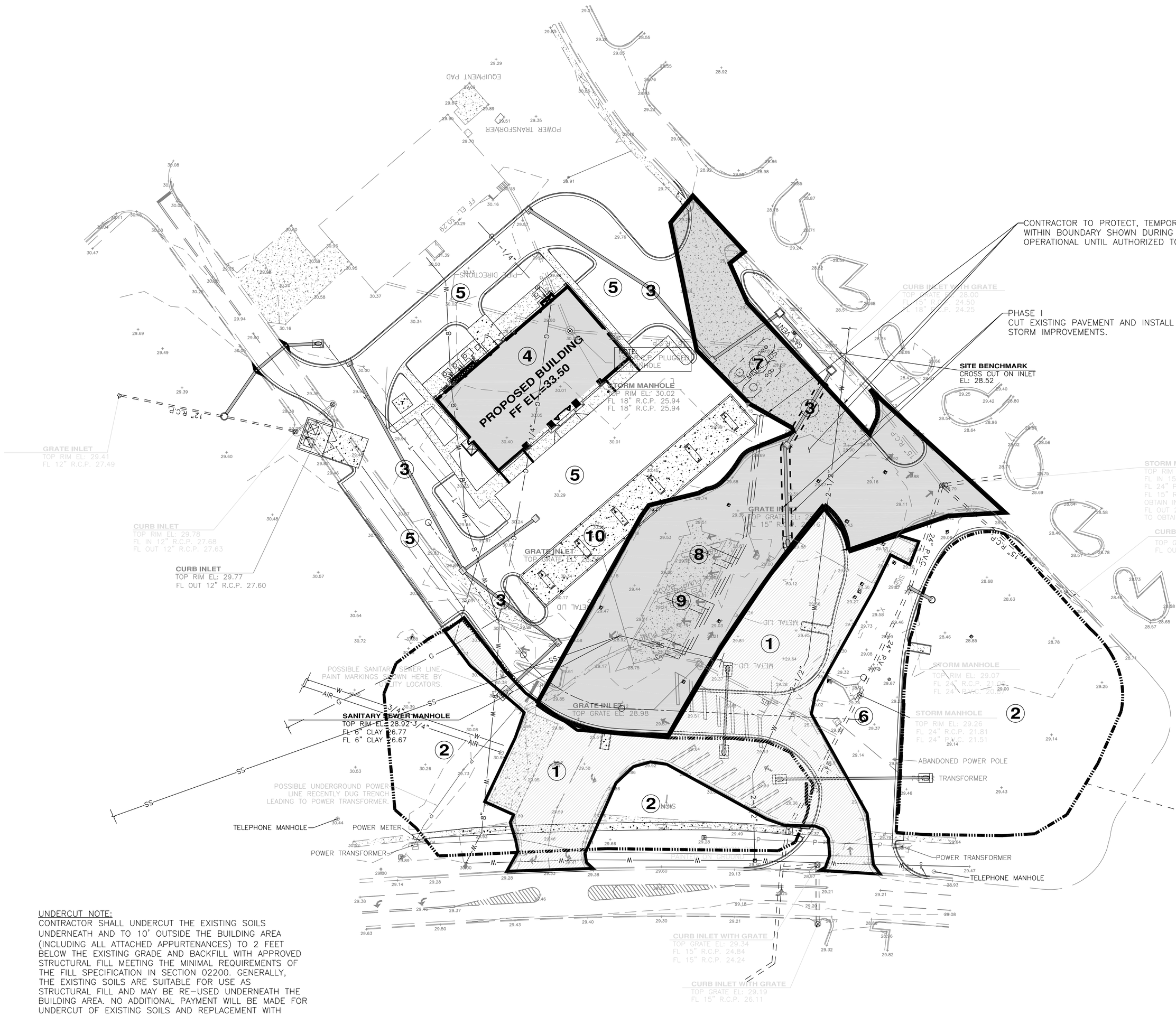

GRAPHIC SCALE: 1"= 30'

PHASING NOTE:
THE CONTRACTOR HAS A RESPONSIBILITY TO KEEP THE EXISTING GAS PUMPS IN FULL OPERATION AND PROVIDE INGRESS AND EGRESS TRAFFIC TO AND FROM PUMPS TO ADJACENT DEVELOPMENTS DURING CONSTRUCTION. THE CONTRACTOR SHALL IN GENERAL FOLLOW THE PHASING SEQUENCE PROVIDED BELOW TO MINIMIZE THE DOWN TIME OF GAS PUMPS DURING CONSTRUCTION.

PHASING I:
① DEMOLISH EXISTING IMPROVEMENTS WHILE KEEPING EXISTING PUMPS IN SERVICE.
② CONSTRUCT PROPOSED STORMWATER BASINS 1 AND 2
③ CONSTRUCT STORM SEWER IMPROVEMENTS SHOWN.
④ CONSTRUCT PROPOSED BUILDING.
⑤ CONSTRUCT REAR DRIVE AND PARKING AREAS AROUND PROPOSED BUILDING.
⑥ CONSTRUCT PROPOSED MAIN ACCESS DRIVE

PHASE II:
⑦ ADJUST EXISTING GAS TANK IMPROVEMENTS TO FINAL GRADE. SEE MECHANICAL PLANS.
⑧ CLOSE EXISTING GAS PUMPS
⑨ DEMOLISH EXISTING GAS PUMP IMPROVEMENTS
⑩ CONSTRUCT PROPOSED GAS PUMP IMPROVEMENTS
⑪ COMPLETE SITEWORK

UNDERCUT NOTE:
CONTRACTOR SHALL UNDERCUT THE EXISTING SOILS UNDERNEATH AND TO 10' OUTSIDE THE BUILDING AREA (INCLUDING ALL ATTACHED APPURTENANCES) TO 2 FEET BELOW THE EXISTING GRADE AND BACKFILL WITH APPROVED STRUCTURAL FILL MEETING THE MINIMAL REQUIREMENTS OF THE FILL SPECIFICATION IN SECTION 02200. GENERALLY, THE EXISTING SOILS ARE SUITABLE FOR USE AS STRUCTURAL FILL AND MAY BE RE-USED UNDERNEATH THE BUILDING AREA. NO ADDITIONAL PAYMENT WILL BE MADE FOR UNDERCUT OF EXISTING SOILS AND REPLACEMENT WITH STRUCTURAL FILL MATERIAL.

POND AS-BUILT NOTE:
CONTRACTOR IS REQUIRED TO PROVIDE THE ENGINEER A CERTIFIED ASBUILT SURVEY OF THE CONSTRUCTED DETENTION PONDS, OUTLET CONTROL STRUCTURES, INVERT ELEVATIONS, ETC. ASSOCIATED WITH THIS SITE. THE SURVEY SHALL BE PERFORMED, SIGNED AND SEALED BY A REGISTERED LICENSED SURVEYOR IN THE STATE OF FLORIDA. THE SURVEY SHALL BE ON NAD 83 FLORIDA STATE PLANE NORTH DATUM. CONTRACTOR SHALL INCLUDE THE COST OF AS-BUILT SURVEY IN HIS BASIC SCOPE OF WORK. CONTRACTOR IS RESPONSIBLE FOR SCHEDULING THE AS-BUILT SURVEY SUCH AS TO NOT CONFLICT WITH THE SCHEDULED BUILDING TURNOVER DATE TO THE OWNER.

GROUNDWATER & DEWATERING NOTE:
ACCORDING TO THE GEOTECHNICAL REPORT BORING LOG, GROUNDWATER WAS ENCOUNTERED THROUGHOUT THE SITE. THE CONTRACTOR SHALL BE PREPARED TO DEWATER THE SITE DURING EXCAVATION. DEWATERING IS CONSIDERED PART OF THE CONTRACT BASIC SCOPE OF WORK AND NO ADDITIONAL PAYMENT SHALL BE MADE FOR DEWATERING. REFERENCE CIVIL SPECIFICATION SECTION 02200 FOR FURTHER DEWATERING INFORMATION.

DEMOLISH EXISTING IMPROVEMENTS WITHIN BOUNDARY SHOWN

CONTRACTOR TO PROTECT, TEMPORARILY BERM, TEMPORARILY FENCE, ETC. WITHIN BOUNDARY SHOWN DURING CONSTRUCTION. THIS AREA TO REMAIN OPERATIONAL UNTIL AUTHORIZED TO CLOSE BY CONTRACTING OFFICER.

CONSTRUCTION OF STORMWATER BASINS 1 & 2

NOTE: EXISTING MONITORING WELLS AND BIO-INJECTION POINTS TO REMAIN, TOPS OF WELLS TO BE ADJUSTED FLUSH TO PROPOSED GRADES. REGULATORY APPROVAL MUST BE OBTAINED.

LEGEND

- EXISTING STORM SEWER
- EXISTING CONTOURS
- PROPOSED CONTOURS
- PROPOSED STORM SEWER
- PROPSOED GRATE INLE
- PROPOSED HEADWALL PER FDOT DWG. 273
- PROPOSED STORM MANHOLE
- RIDGE LINE
- PROPOSED FLOW
- EXISTING ELEVATION +500.00
- PROPOSED ELEVATION ·500.00
- EXISTING MONITORING WELLS TO REMAIN HEIGHT TO BE ADJUSTED

AAFES Real Estate Directorate
AAFES (RE-C) P.O.BOX 660320 DALLAS, TX 75266-0320

KEY PLAN:

DATE	REVISION NO. & DESCRIPTION	BY

MARK R. GONZALEZ LICENSE No. 48500 STATE OF FLORIDA PROFESSIONAL ENGINEER
02/15/2012

PARSONS WIBLE BRUMMAL ALKIRE / ARCHITECTS INC.
MONTGOMERY, ALABAMA

DESIGN BY:
CHECKED BY:
RECOMMENDED: DATE
APPROVED: DATE

ARMY & AIR FORCE EXCHANGE SERVICE
DEPARTMENTS OF THE ARMY & AIR FORCE

RE-C
REAL ESTATE DIRECTORATE

PROJECT:
TYNDALL AFB
CONSTRUCT SHOPPETTE/ FOOD/CLASS6/GAS

TYNDALL, AFB
FLORIDA

DRAWING TITLE:
SITE PHASING PLAN

DATE:	SCALE:	SHEET:
18 JAN 2012	1"=30'	SITE C202

DRAWING PROJECT NO.
0941-09-000003

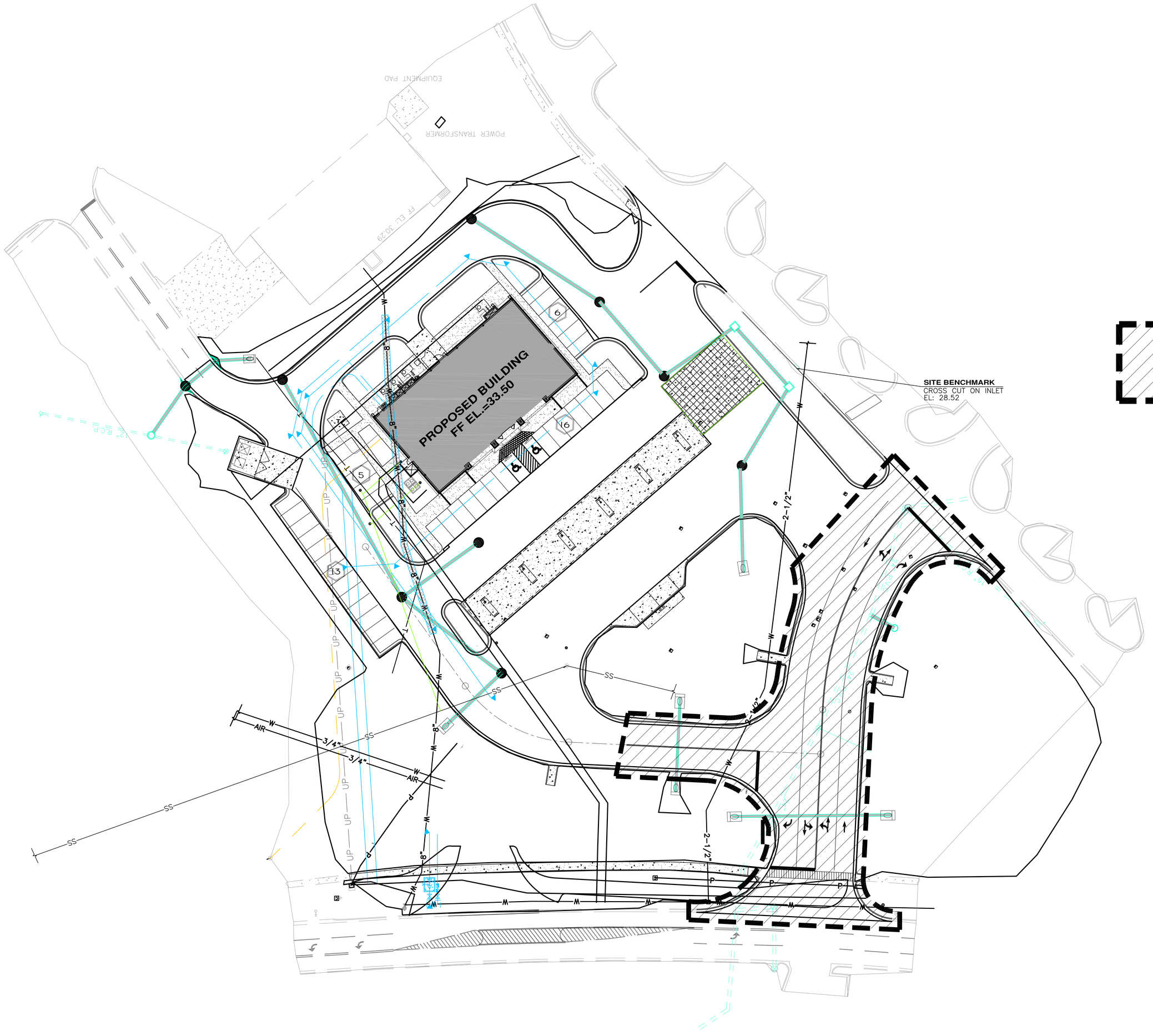

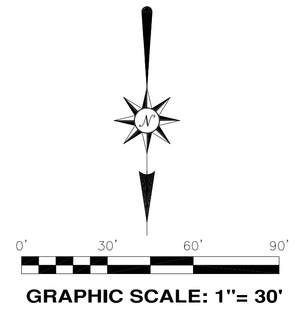

GRAPHIC SCALE: 1"= 30'

AREA OF PAVING TO BE PRICED SEPARATELY FROM REMAINDER OF PAVING WORK.
INCLUDE GRADING AND EARTHWORK 5' PAST CURBS, BASE WORK, ASPHALTIC BASE & WEARING COURSES & CONCRETE CURBS & GUTTER AS WELL AS PAVEMENT MARKINGS & SIGNS.
ENTER THIS AS A SEPARATE ITEM ON BID FORM ISSUED BY CONTRACTING OFFICER.

AAFES
Real Estate Directorate
AAFES (RE-C) P.O.BOX 660320 DALLAS, TX 75266-0320

KEY PLAN:

DATE	REVISION NO. & DESCRIPTION	BY

STATE OF ALABAMA · MONTGOMERY · EDWARD [illegible] · REGISTERED ARCHITECT · ALABAMA

PARSONS WIBLE BRUMMAL ALKIRE / ARCHITECTS INC.
MONTGOMERY, ALABAMA

DESIGN BY:
CHECKED BY:
RECOMMENDED: DATE
APPROVED: DATE

ARMY & AIR FORCE EXCHANGE SERVICE
DEPARTMENTS OF THE ARMY & AIR FORCE

RE-C
REAL ESTATE DIRECTORATE

PROJECT:
TYNDALL AFB
CONSTRUCT SHOPPETTE/ FOOD/CLASS6/GAS

TYNDALL, AFB
FLORIDA

DRAWING TITLE:
SEPARATELY PRICED PAVING AREA PLAN

DATE:	SCALE:	SHEET:
18 JAN 2012	1"=30'	SITE C203

DRAWING PROJECT NO.
0941-09-000003

GONZALEZ - STRENGTH & ASSOCIATES, INC.
ENGINEERING, LAND PLANNING, & SURVEYING
2176 PARKWAY LAKE DRIVE
HOOVER, ALABAMA 35244
PHONE: (205) 942-2486
FAX: (205) 942-3033
Gonzalez-Strength.com
© Copyright 2006

G.S.A. JOB NO. 09PWB35

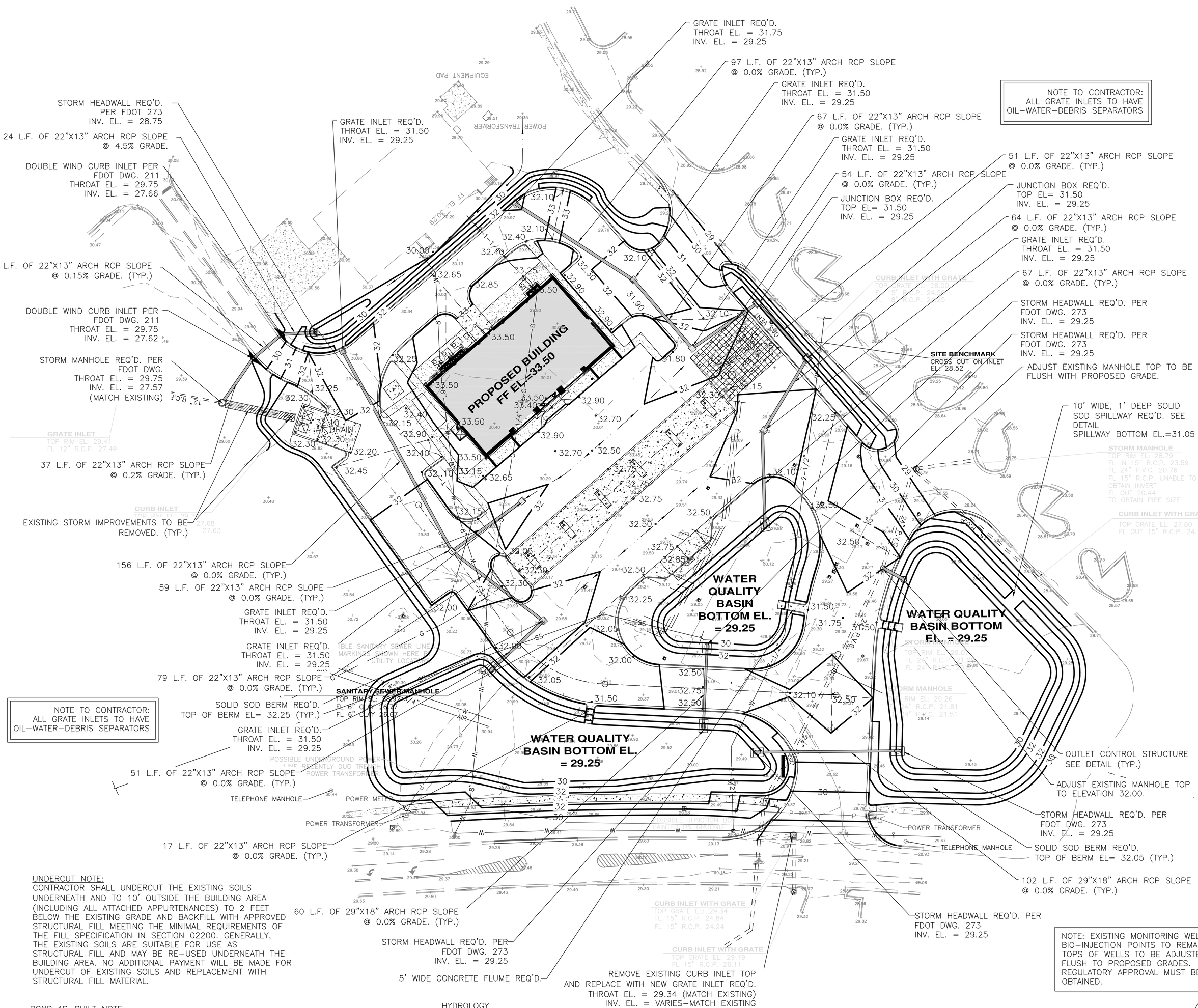

0' 30' 60' 90'

GRAPHIC SCALE: 1"= 30'

FOUNDATION EXCAVATION NOTES
1. Foundation excavations shall be inspected and tested to assure all loose, soft or undesirable material is removed, and that the foundation bears on satisfactorily compacted material.
2. Over excavations shall be backfilled with #57 stone, or lean concrete, or well compacted suitable backfill compacted in accordance with the applicable notes.
3. All foundation excavations shall be protected against rain and ground water effects. If excavation must remain open overnight or if rain becomes imminent, a 2" "mud mat" of lean concrete (2000 psi) shall be placed on the exposed foundation soils.
4. Foundation excavations shall be inspected and tested to assure minimum bearing capacities are achieved.
5. All floor slabs shall be supported on 6" of compacted granular material with the largest diameter stone not to exceed 1"

SITE PREPARATION NOTES
1. All demolition, construction debris, clearing, and excess excavation shall be disposed of in a legal manner off-site, on Base.
2. Strip all topsoil within building and pavement areas, and stockpile for later use. Dispose of any excess topsoil in locations on site as directed by the Contracting Officer.
3. Prior to placing fill in pavement, surfacing, or in building pad areas, exposed subgrade shall be proof rolled with a heavily loaded dump truck. All areas showing signs of pumping, rutting or any deleterious materials found in place (organic, wet, soft, loose, or unstable material) shall be undercut and replaced.
4. All fill placed in undercut areas shall meet the requirements of these specifications and be placed in accordance with these specifications.
5. Prior to placing fill and in cut areas exposed at subgrade, contractor shall scarify existing soils to a depth of 8" and recompacted to the specified density and moisture content.
6. Material to be used as fill shall be free of organics with no rock particle size greater than 6", dry unit weight in excess of 100 pcf, a liquid limit less than 40, a plastic index less than 15, and a volumetric free swell of less than 2%.
7. Fill shall be placed in loose lifts not to exceed 10" and compacted per ASTM D-698 as follows: A. Building areas - compact to 95% of maximum modified Proctor dry Density.
B. Paving areas - compact to 95% of maximum modified Proctor dry Density.
C. unpaved areas- compact to 95% of maximum modified Proctor dry Density.
8. All fill shall be compacted within +3% to -2% of optimum moisture content as determined by modified Proctor test.
9. Contractor shall furnish compaction test reports on all soils placed or scarified to the Contracting Officer based on a frequency of one test per 2500 S.F. of area per lift.
10. A Geotechnical report is available through Gallet & Associates. The Geotechnical report shall supersede any discrepancies in the above information.
11. See SWPPP Plan for erosion control requirements.
12. If unsuitable bearing soils are encountered in footing excavations, the excavation should be extended deeper to suitable soils and the footing shall bear directly on these soils at the lower level or on properly compacted backfill extending down to the suitable soils. Overexcavation for compacted backfill placement below footings shall extend laterally beyond all edges of the footings at least 8 inches per foot of overexcavation depth below footing base elevation. The overexcavation shall then be backfilled up to the footing base elevation with compacted engineered fill material placed in lifts of 9 inches or less in loose thickness and compacted to at least 95% of the material's modified effort maximum dry density (ASTM D 1557).
13. Floor slab granular material shall consist of less than 5% fines (material passing the #200 sieve) and shall be supported by recompacted native soils meeting the fill specification requirements.
14. The area underlying the floor slab shall be thoroughly proofrolled with a loaded tandem axle dump truck prior to final grading and placement of base rock.
15. Areas where unsuitable material is encountered are to be repaired by removing and replacing the affected material with properly compacted fill.
16. All floor slab subgrade areas are to be moisture conditioned and properly compacted in accordance to specification section 02200 prior to placement of base rock and concrete.
17. The Contractor shall issue a Notice of Commencement to NWFWMD 48 hours prior to beginning construction. See SWPPP document.

UNDERCUT NOTE:
CONTRACTOR SHALL UNDERCUT THE EXISTING SOILS UNDERNEATH AND TO 10' OUTSIDE THE BUILDING AREA (INCLUDING ALL ATTACHED APPURTENANCES) TO 2 FEET BELOW THE EXISTING GRADE AND BACKFILL WITH APPROVED STRUCTURAL FILL MEETING THE MINIMAL REQUIREMENTS OF THE FILL SPECIFICATION IN SECTION 02200. GENERALLY, THE EXISTING SOILS ARE SUITABLE FOR USE AS STRUCTURAL FILL AND MAY BE RE-USED UNDERNEATH THE BUILDING AREA. NO ADDITIONAL PAYMENT WILL BE MADE FOR UNDERCUT OF EXISTING SOILS AND REPLACEMENT WITH STRUCTURAL FILL MATERIAL.

POND AS-BUILT NOTE:
CONTRACTOR IS REQUIRED TO PROVIDE THE ENGINEER A CERTIFIED ASBUILT SURVEY OF THE CONSTRUCTED DETENTION PONDS, OUTLET CONTROL STRUCTURES, INVERT ELEVATIONS, ETC. ASSOCIATED WITH THIS SITE. THE SURVEY SHALL BE PERFORMED, SIGNED AND SEALED BY A REGISTERED LICENSED SURVEYOR IN THE STATE OF FLORIDA. THE SURVEY SHALL BE ON NAD 83 FLORIDA STATE PLANE NORTH DATUM. CONTRACTOR SHALL INCLUDE THE COST OF AS-BUILT SURVEY IN HIS BASIC SCOPE OF WORK. CONTRACTOR IS RESPONSIBLE FOR SCHEDULING THE AS-BUILT SURVEY SUCH AS TO NOT CONFLICT WITH THE SCHEDULED BUILDING TURNOVER DATE TO THE OWNER.

GROUNDWATER & DEWATERING NOTE:
ACCORDING TO THE GEOTECHNICAL REPORT BORING LOG, GROUNDWATER WAS ENCOUNTERED THROUGHOUT THE SITE. THE CONTRACTOR SHALL BE PREPARED TO DEWATER THE SITE DURING EXCAVATION. DEWATERING IS CONSIDERED PART OF THE CONTRACT BASIC SCOPE OF WORK AND NO ADDITIONAL PAYMENT SHALL BE MADE FOR DEWATERING. REFERENCE CIVIL SPECIFICATION SECTION 02200 FOR FURTHER DEWATERING INFORMATION.

HYDROLOGY
LEED SS CREDITS 6.1
POST DEVELOPED STORM WATER FLOW RATE AND QUANTITY NOT TO EXCEED PRE DEVELOPED STORM WATER AND QUANTITY FOR THE 1YR & 2YR 24 HOUR STORM

YEAR	PRE-DEV FLOW (CFS)	POST DEV FLOW (CFS)	PRE-DEV QUANTITY (CU. FT.)	POST DEV QUANTITY (CU. FT.)
1	12.9	0.84	26,279	24,250
2	19.41	3.06	40,161	39,509

LEED SS CREDIT 6.2
REQUIRES WATER QUALITY TREATMENT PER LOCAL GOVERNING AGENCY. TO MEET THIS REQUIREMENT NORTH WEST FLORIDA WATER MANAGMENT DISTRICT (NWFWMD) CRITERIA HAS BEEN MET. NWFWMD ALSO REQUIRES DETENTION OF THE 25YR-24HR STORM EVENT.

TREATMENT VOLUME TO SATURATE = 14,133 CU. FT.
TREATMENT VOLUME OF SITE = 13,866 CU. FT.
SINCE TREATMENT VOLUME OF SITE IS LESS THAN TREATMENT VOLUME TO SATURATE THEN THE TREATMENT WILL MEET THE 72 HOUR CRITERIA ACCORDING TO NWFWMD REQUIREMENTS.

Q(25) PRE = 30.45 CFS
Q(25) POST = 13.77 CFS

LEGEND

- EXISTING STORM SEWER
- EXISTING CONTOURS
- PROPOSED CONTOURS
- PROPOSED STORM SEWER
- PROPSOED GRATE INLE
- PROPOSED HEADWALL PER FDOT DWG. 273
- PROPOSED STORM MANHOLE
- RIDGE LINE
- PROPOSED FLOW
- EXISTING ELEVATION +500.00
- PROPOSED ELEVATION ·500.00
- EXISTING MONITORING WELLS TO REMAIN HEIGHT TO BE ADJUSTED

AAFES Real Estate Directorate
AAFES (RE-C) P.O.BOX 660320 DALLAS, TX 75266-0320

KEY PLAN:

DATE	REVISION NO. & DESCRIPTION	BY

MARK R. GONZALEZ LICENSE No. 48500 STATE OF FLORIDA PROFESSIONAL ENGINEER
02/15/2012

PARSONS WIBLE BRUMMAL ALKIRE / ARCHITECTS INC.
MONTGOMERY, ALABAMA

DESIGN BY:
CHECKED BY:
RECOMMENDED: DATE
APPROVED: DATE

ARMY & AIR FORCE EXCHANGE SERVICE
DEPARTMENTS OF THE ARMY & AIR FORCE

RE-C
REAL ESTATE DIRECTORATE

PROJECT:
TYNDALL AFB
CONSTRUCT SHOPPETTE/
FOOD/CLASS6/GAS

TYNDALL, AFB
FLORIDA

DRAWING TITLE:
SITE GRADING PLAN

DATE:	SCALE:	SHEET:
18 JAN 2012	1"=30'	SITE C301

DRAWING PROJECT NO.
0941-09-000003

GONZALEZ - STRENGTH & ASSOCIATES, INC.
ENGINEERING, LAND PLANNING, & SURVEYING
2176 PARKWAY LAKE DRIVE
HOOVER, ALABAMA 35244
PHONE: (205) 942-2486
FAX: (205) 942-3033
Gonzalez-Strength.com
© Copyright 2006
G.S.A. JOB NO. 09PWB35

AAFES Real Estate Directorate
AAFES (RE-C) P.O.BOX 660320 DALLAS, TX 75266-0320

KEY PLAN:

DATE	REVISION NO. & DESCRIPTION	BY

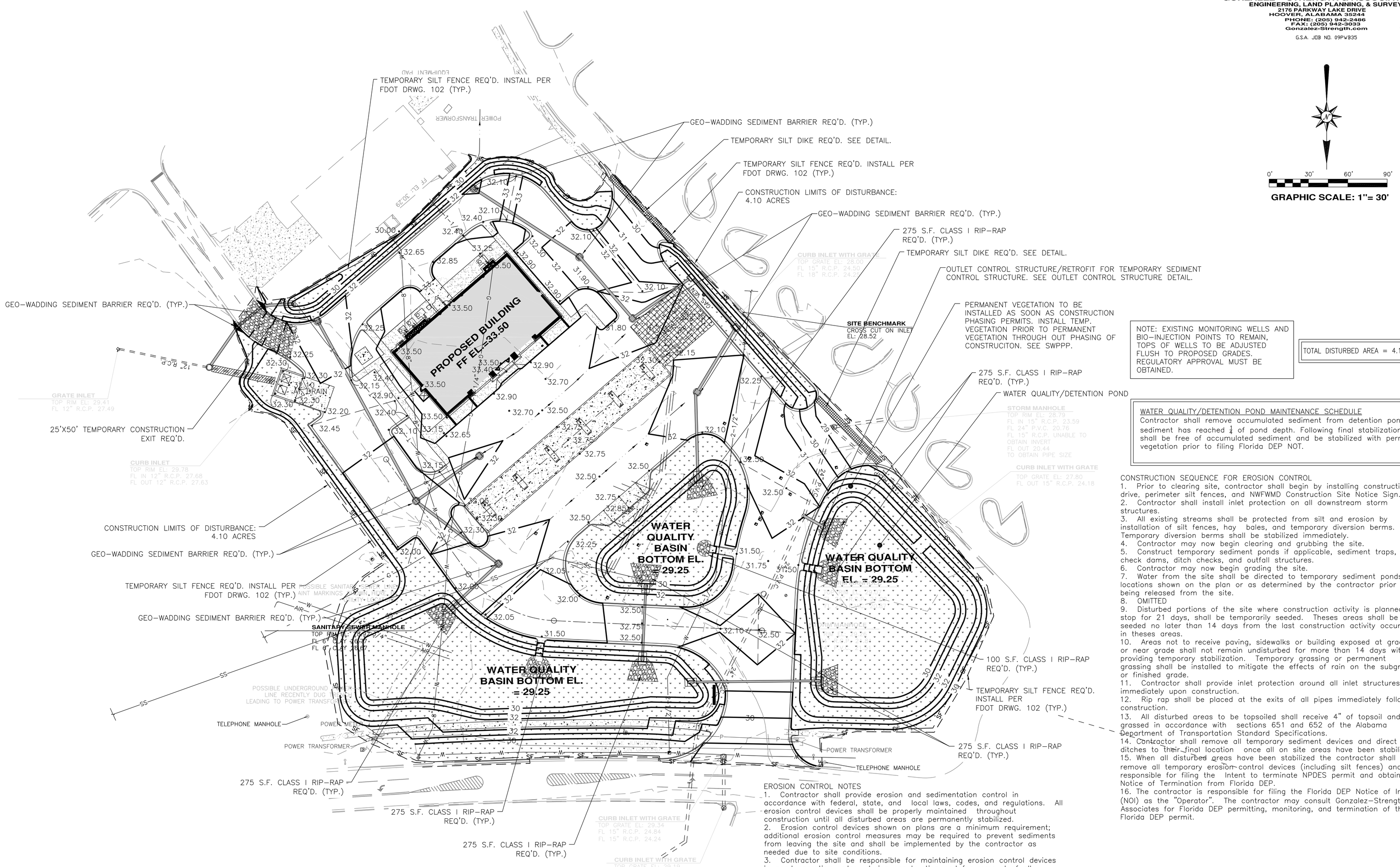

GRAPHIC SCALE: 1"= 30'

NOTE: EXISTING MONITORING WELLS AND BIO-INJECTION POINTS TO REMAIN, TOPS OF WELLS TO BE ADJUSTED FLUSH TO PROPOSED GRADES. REGULATORY APPROVAL MUST BE OBTAINED.

TOTAL DISTURBED AREA = 4.10 ACRES

WATER QUALITY/DETENTION POND MAINTENANCE SCHEDULE
Contractor shall remove accumulated sediment from detention ponds when sediment has reached ¼ of pond depth. Following final stabilization ponds shall be free of accumulated sediment and be stabilized with permanent vegetation prior to filing Florida DEP NOT.

CONSTRUCTION SEQUENCE FOR EROSION CONTROL
1. Prior to clearing site, contractor shall begin by installing construction drive, perimeter silt fences, and NWFWMD Construction Site Notice Sign.
2. Contractor shall install inlet protection on all downstream storm structures.
3. All existing streams shall be protected from silt and erosion by installation of silt fences, hay bales, and temporary diversion berms. Temporary diversion berms shall be stabilized immediately.
4. Contractor may now begin clearing and grubbing the site.
5. Construct temporary sediment ponds if applicable, sediment traps, check dams, ditch checks, and outfall structures.
6. Contractor may now begin grading the site.
7. Water from the site shall be directed to temporary sediment ponds at locations shown on the plan or as determined by the contractor prior to being released from the site.
8. OMITTED
9. Disturbed portions of the site where construction activity is planned to stop for 21 days, shall be temporarily seeded. Theses areas shall be seeded no later than 14 days from the last construction activity occurring in theses areas.
10. Areas not to receive paving, sidewalks or building exposed at grade or near grade shall not remain undisturbed for more than 14 days without providing temporary stabilization. Temporary grassing or permanent grassing shall be installed to mitigate the effects of rain on the subgrade or finished grade.
11. Contractor shall provide inlet protection around all inlet structures immediately upon construction.
12. Rip rap shall be placed at the exits of all pipes immediately following construction.
13. All disturbed areas to be topsoiled shall receive 4" of topsoil and be grassed in accordance with sections 651 and 652 of the Alabama Department of Transportation Standard Specifications.
14. Contractor shall remove all temporary sediment devices and direct all ditches to their final location once all on site areas have been stabilized.
15. When all disturbed areas have been stabilized the contractor shall remove all temporary erosion control devices (including silt fences) and is responsible for filing the Intent to terminate NPDES permit and obtaining Notice of Termination from Florida DEP.
16. The contractor is responsible for filing the Florida DEP Notice of Intent (NOI) as the "Operator". The contractor may consult Gonzalez-Strength & Associates for Florida DEP permitting, monitoring, and termination of the Florida DEP permit.

EROSION CONTROL NOTES
1. Contractor shall provide erosion and sedimentation control in accordance with federal, state, and local laws, codes, and regulations. All erosion control devices shall be properly maintained throughout construction until all disturbed areas are permanently stabilized.
2. Erosion control devices shown on plans are a minimum requirement; additional erosion control measures may be required to prevent sediments from leaving the site and shall be implemented by the contractor as needed due to site conditions.
3. Contractor shall be responsible for maintaining erosion control devices in good operating order during construction and for removal of all sediments and erosion control devices once the site is permanently stabilized.
4. Contractor is responsible for filing the Notice of Registration (NOR) as the "Operator" including all associated fees, performing all inspections, background and construction sampling, and maintaining inspection and upset reports required by NPDES permit requirements conditions. If contractor is unfamiliar with such requirements, contractor may contact the engineer for more information.
5. Contractor shall monitor and maintain all erosion control devices after each rainfall or at least twice a month.
6. Contractors or subcontractors will be responsible for removing sediment in the detention pond if applicable and any sediment that may have collected in the storm sewer drainage systems in conjunction with the stabilization of the site.
7. The Contractor may consult Gonzalez-Strength & Associates for Florida DEP permitting, monitoring, and termination of the Florida DEP permit.
8. Onsite & offsite soil stockpile and borrow areas shall be protected from erosion and sedimentation through implementation of best management practices. stockpile and borrow area locations shall be noted on the site map and permitted in accordance with npdes registration requirements.
9. See SWPPP for additional BMP requirements.

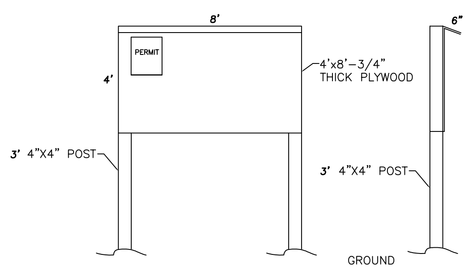

CONSTRUCTION SIGN DETAIL
NTS

NOTE:
1) NO MORE THAN 50' FROM PRIMARY CONSTRUCTION ENTRANCE
2) IN PLAIN SIGHT
3) INFORMATION NEEDED:
a) NAME OF DEVELOPER, OWNER OF PROPERTY, GRADING CONTRACTOR, 24 HOUR NOTICE PERSON, AND ANY OTHER PERSON OR PARTY DIRECTLY CONNECTED TO THE LAND DISTURBANCE ACTIVITY
b) PHONE, FAX AND CELL NUMBERS AND ADDRESSES OF PARTIES INVOLVED
c) LAND DISTURBANCE PERMIT TO BE POSTED ON THE SIGN
4) SPACE SHOULD BE AVAILABLE FOR INSPECTOR POSTINGS
5) PLASTIC OVERLAY SHEET TO PROTECT POSTINGS FROM WATER
6) TO BE CHECKED DAILY FOR UPDATES AND POSTINGS
7) COMPLY WITH UNIFIED FACILITIES CRITERIA (UFC) 3-120-01, AIR FORCE SIGN STANDARD, PARAGRAPH 4.20.
8) COMPLY WITH AIR FORCE ENGINEERING TECHNICAL LETTER (ETL) 02-09 CONSTRUCTION SIGNS FOR MILITARY CONSTRUCTION MILCON PROJECTS.

LEGEND

EXISTING STORM SEWER	RIDGE LINE
EXISTING CONTOURS	PROPOSED FLOW
PROPOSED CONTOURS	EXISTING ELEVATION +500.00
SILT FENCE	PROPOSED ELEVATION ·500.00
RIP-RAP	GEO-WADDING SEDIMENT BARRIER
TEMPORARY AND PERMANENT VEGETATION	
SOLID SOD DITCH LINING	EXISTING MONITORING WELLS TO REMAIN HEIGHT TO BE ADJUSTED
LIMITS OF DISTURBANCE	

MARK R. GONZALEZ LICENSE No. 48500 STATE OF FLORIDA PROFESSIONAL ENGINEER
02/15/2012

PARSONS WIBLE BRUMMAL ALKIRE / ARCHITECTS INC.
MONTGOMERY, ALABAMA

DESIGN BY:	
CHECKED BY:	
RECOMMENDED:	DATE
APPROVED:	DATE

ARMY & AIR FORCE EXCHANGE SERVICE
DEPARTMENTS OF THE ARMY & AIR FORCE

RE-C
REAL ESTATE DIRECTORATE

PROJECT:
TYNDALL AFB
CONSTRUCT SHOPPETTE/ FOOD/CLASS6/GAS

TYNDALL, AFB
FLORIDA

DRAWING TITLE:
SWPPP PLAN

DATE:	SCALE:	SHEET:
18 JAN 2012	1"=30'	SITE C302

DRAWING PROJECT NO.
0941-09-000003

GONZALEZ - STRENGTH & ASSOCIATES, INC.
ENGINEERING, LAND PLANNING, & SURVEYING
2176 PARKWAY LAKE DRIVE
HOOVER, ALABAMA 35244
PHONE: (205) 942-2486
FAX: (205) 942-3033
Gonzalez-Strength.com
© Copyright 2006

G.S.A. JOB NO. 09PWB35

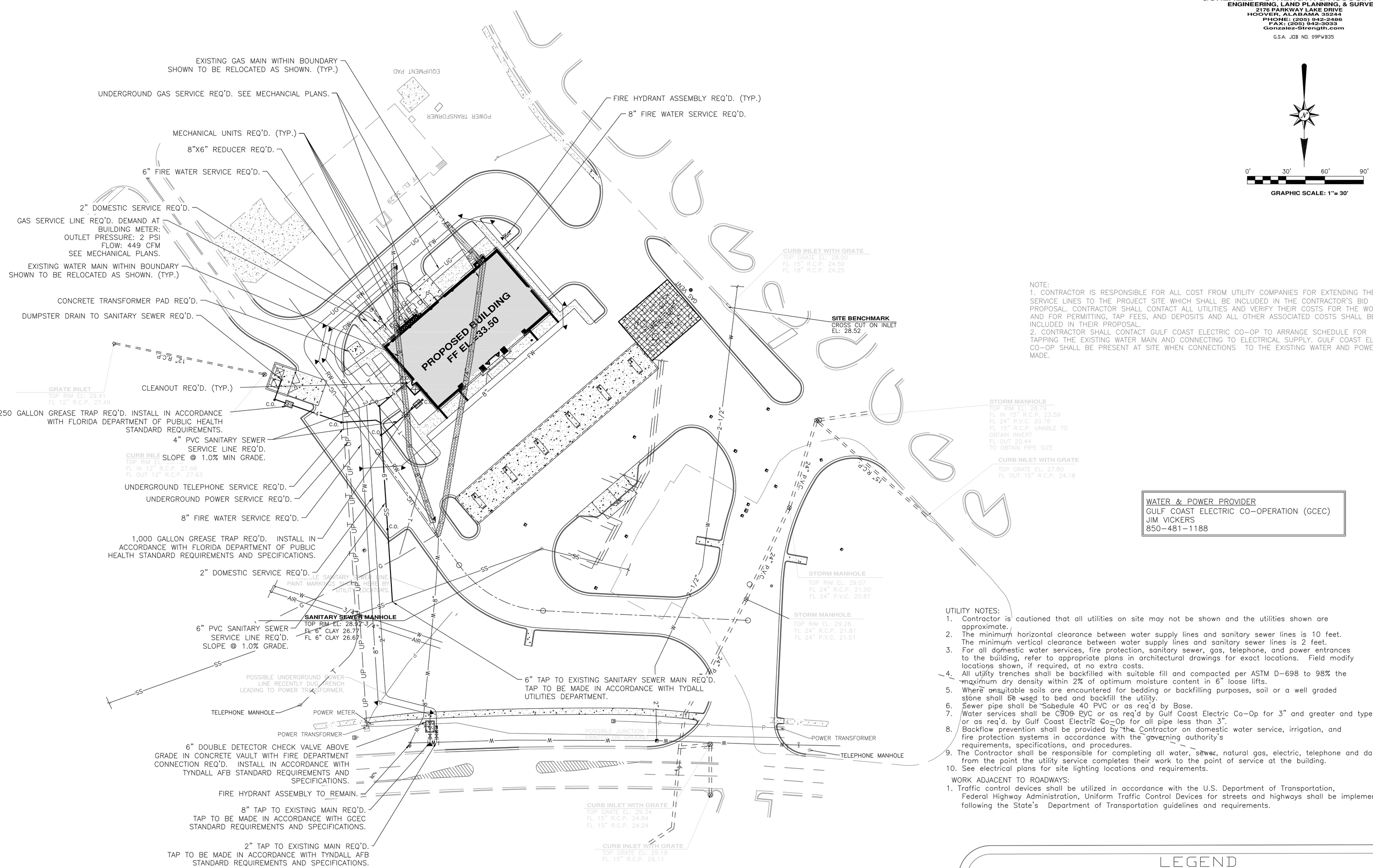

0' 30' 60' 90'

GRAPHIC SCALE: 1"= 30'

NOTE:
1. CONTRACTOR IS RESPONSIBLE FOR ALL COST FROM UTILITY COMPANIES FOR EXTENDING THEIR SERVICE LINES TO THE PROJECT SITE WHICH SHALL BE INCLUDED IN THE CONTRACTOR'S BID PROPOSAL. CONTRACTOR SHALL CONTACT ALL UTILITIES AND VERIFY THEIR COSTS FOR THE WORK AND FOR PERMITTING, TAP FEES, AND DEPOSITS AND ALL OTHER ASSOCIATED COSTS SHALL BE INCLUDED IN THEIR PROPOSAL.
2. CONTRACTOR SHALL CONTACT GULF COAST ELECTRIC CO-OP TO ARRANGE SCHEDULE FOR TAPPING THE EXISTING WATER MAIN AND CONNECTING TO ELECTRICAL SUPPLY. GULF COAST ELECTRIC CO-OP SHALL BE PRESENT AT SITE WHEN CONNECTIONS TO THE EXISTING WATER AND POWER ARE MADE.

WATER & POWER PROVIDER
GULF COAST ELECTRIC CO-OPERATION (GCEC)
JIM VICKERS
850-481-1188

UTILITY NOTES:
1. Contractor is cautioned that all utilities on site may not be shown and the utilities shown are approximate.
2. The minimum horizontal clearance between water supply lines and sanitary sewer lines is 10 feet. The minimum vertical clearance between water supply lines and sanitary sewer lines is 2 feet.
3. For all domestic water services, fire protection, sanitary sewer, gas, telephone, and power entrances to the building, refer to appropriate plans in architectural drawings for exact locations. Field modify locations shown, if required, at no extra costs.
4. All utility trenches shall be backfilled with suitable fill and compacted per ASTM D-698 to 98% the maximum dry density within 2% of optimum moisture content in 6" loose lifts.
5. Where unsuitable soils are encountered for bedding or backfilling purposes, soil or a well graded stone shall be used to bed and backfill the utility.
6. Sewer pipe shall be Schedule 40 PVC or as req'd by Base.
7. Water services shall be C900 PVC or as req'd by Gulf Coast Electric Co-Op for 3" and greater and type K copper or as req'd. by Gulf Coast Electric Co-Op for all pipe less than 3".
8. Backflow prevention shall be provided by the Contractor on domestic water service, irrigation, and fire protection systems in accordance with the governing authority's requirements, specifications, and procedures.
9. The Contractor shall be responsible for completing all water, sewer, natural gas, electric, telephone and data services from the point the utility service completes their work to the point of service at the building.
10. See electrical plans for site lighting locations and requirements.

WORK ADJACENT TO ROADWAYS:
1. Traffic control devices shall be utilized in accordance with the U.S. Department of Transportation, Federal Highway Administration, Uniform Traffic Control Devices for streets and highways shall be implemented following the State's Department of Transportation guidelines and requirements.

NOTE: EXISTING MONITORING WELLS AND BIO-INJECTION POINTS TO REMAIN, TOPS OF WELLS TO BE ADJUSTED FLUSH TO PROPOSED GRADES. REGULATORY APPROVAL MUST BE OBTAINED.

NOTE: AS A FIRST ORDER OF BUSINESS AND PRIOR TO ANY WORK BEGINNING, THE CONTRACTOR SHALL HAVE ALL EXISTING UTILITIES ON AND ADJACENT TO THE SITE LOCATED. IT IS THE RESPONSIBILITY OF THE CONTRACTOR TO BE FAMILIAR WITH THE LOCATIONS OF THE UTILITIES AND AVOID ALL CONFLICTS. ANY SERVICE INTERRUPTIONS AND/OR ASSOCIATED COSTS ARE THE SOLE RESPONSIBILITY OF THE CONTRACTOR AND SHALL BE COORDINATED WITH THE CONTRACTING OFFICER PER PROJECT SPECIFICATIONS. THE EXISTING UTILITIES SHOWN HEREIN ARE TO BE CONSIDERED APPROXIMATE. THE CONTRACTOR SHALL COORDINATE ALL UTILITY ADJUSTMENTS WITH THE APPROPRIATE UTILITIES COMPANIES. ALL IMPROVEMENTS SHALL MEET THE REQUIREMENTS OF EACH COMPANY'S STANDARDS OR SPECIFICATIONS.

LEGEND

CON CON	PROPOSED ELECTRICAL CONDUIT
SS SS	PROPOSED SANITARY SEWER
DW DW	PROPOSED DOMESTIC WATER
UT UT	PROPOSED WATER
UP UP	PROPOSED POWER
SS SS	EXISTING SANITARY SEWER
UGP UGP	EXISTING UNDERGROUND POWER
∅ ∅	EXISTING OVERHEAD POWER & TELEPHONE LINE
W W	EXISTING WATER
RW RW	RELOCATED WATER LINE
FW FW	PROPOSED FIRE WATER SERVICE
UG UG	RELOCATED GAS SERVICE
	EXISTING UNDERGROUND UTILITY TO BE RELOCATED

PROPOSED THRUST BLOCK	▼
EXISTING POWER POLE	∅
EXISTING MANHOLE	◎
EXISTING WATER VALVE	
EXISTING FIRE HYDRANT	
EXISTING GUY WIRE	
EXISTING MONITORING WELLS TO REMAIN HEIGHT TO BE ADJUSTED	
PROPOSED WATER METER	
C.O. PROPOSED CLEAN OUT	
PROPOSED GATE VALVE	

AAFES Real Estate Directorate
AAFES (RE-C) P.O.BOX 660320 DALLAS, TX 75266-0320

KEY PLAN:

DATE	REVISION NO. & DESCRIPTION	BY

MARK R. GONZALEZ LICENSE No. 48500 STATE OF FLORIDA PROFESSIONAL ENGINEER
02/15/2012

PARSONS WIBLE BRUMMAL ALKIRE / ARCHITECTS INC.
MONTGOMERY, ALABAMA

DESIGN BY:
CHECKED BY:
RECOMMENDED: DATE
APPROVED: DATE

ARMY & AIR FORCE EXCHANGE SERVICE
DEPARTMENTS OF THE ARMY & AIR FORCE

RE-C
REAL ESTATE DIRECTORATE

PROJECT:
TYNDALL AFB
CONSTRUCT SHOPPETTE/ FOOD/CLASS6/GAS

TYNDALL, AFB
FLORIDA

DRAWING TITLE:
SITE UTILITY PLAN

DATE:	SCALE:	SHEET:
18 JAN 2012	1"=30'	SITE C401

DRAWING PROJECT NO.
0941-09-000003

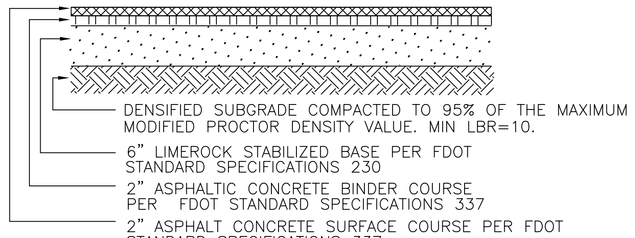

DESIGN PROVIDED BY GALLET & ASSOCATES

All pavement components must be placed and compacted in accordance with the applicable section of the Florida Department of Transportation (FDOT). All sugrade, base, and pavement construction operations should meet minimum requirements of latest FDOT Standard Specifications for Roads and Bridges.

HEAVY DUTY ASPHALT PAVING N.T.S.

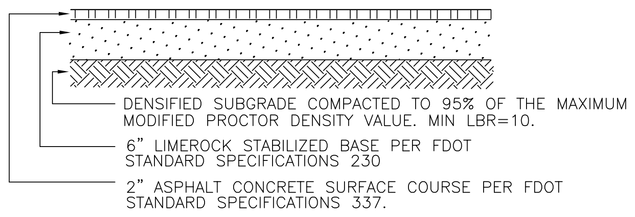

DESIGN PROVIDED BY GALLET & ASSOCATES

All pavement components must be placed and compacted in accordance with the applicable section of the Florida Department of Transportation (FDOT). All sugrade, base, and pavement construction operations should meet minimum requirements of latest FDOT Standard Specifications for Roads and Bridges.

STANDARD DUTY ASPHALT PAVING N.T.S.

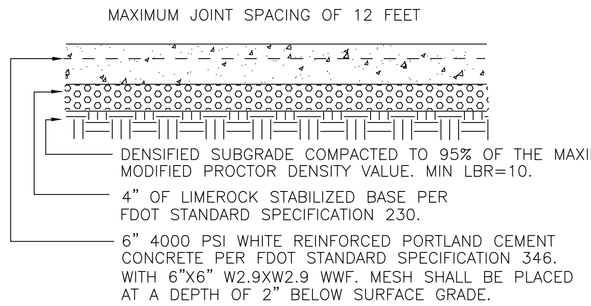

DESIGN PROVIDED BY GALLET & ASSOCATES

All pavement components must be placed and compacted in accordance with the applicable section of the Florida Department of Transportation (FDOT). All sugrade, base, and pavement construction operations should meet minimum requirements of latest FDOT Standard Specifications for Roads and Bridges.

HEAVY DUTY CONCRETE PAVING SECTION N.T.S.

GONZALEZ - STRENGTH & ASSOCIATES, INC.
ENGINEERING, LAND PLANNING, & SURVEYING
2176 PARKWAY LAKE DRIVE
HOOVER, ALABAMA 35244
PHONE: (205) 942-2486
FAX: (205) 942-3033
Gonzalez-Strength.com
© Copyright 2006
G.S.A. JOB NO. 09PWB35

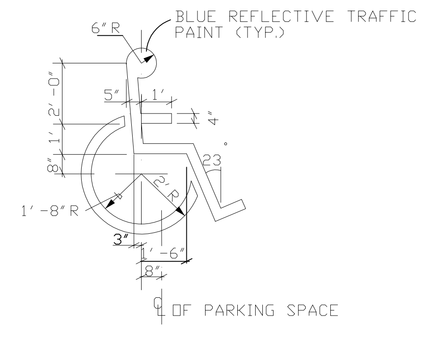

HANDICAP SYMBOL DETAIL FOR PARKING SPACE N.T.S.

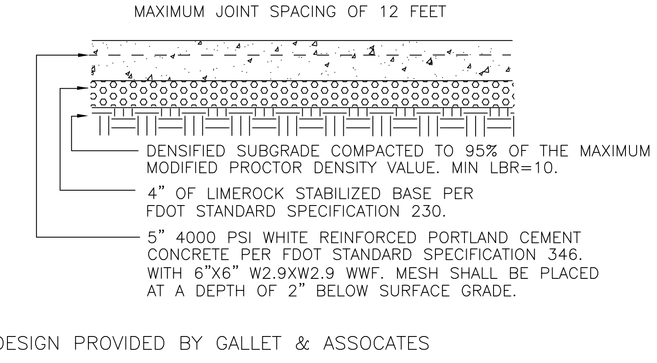

DESIGN PROVIDED BY GALLET & ASSOCATES

All pavement components must be placed and compacted in accordance with the applicable section of the Florida Department of Transportation (FDOT). All sugrade, base, and pavement construction operations should meet minimum requirements of latest FDOT Standard Specifications for Roads and Bridges.

STANDARD DUTY CONCRETE PAVING SECTION N.T.S.

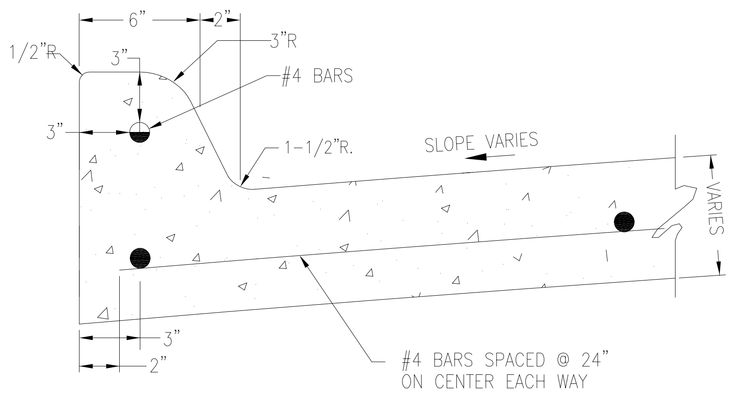

INTEGRAL CURB DETAIL N.T.S.

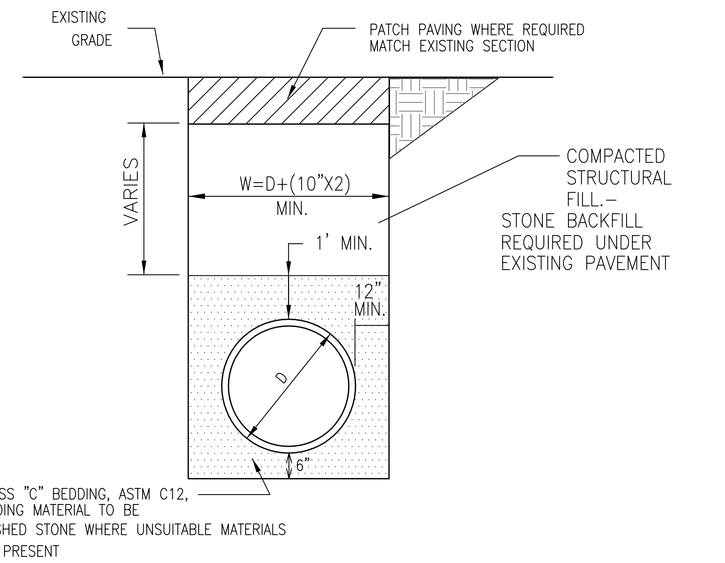

PIPE BEDDING DETAIL N.T.S.

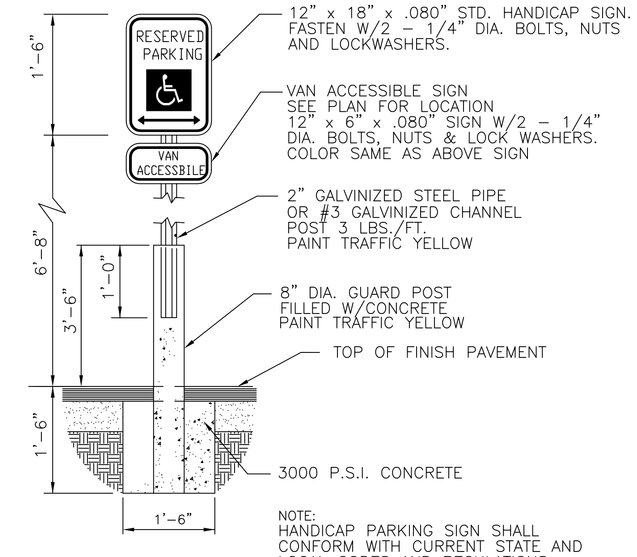

NOTE:
HANDICAP PARKING SIGN SHALL CONFORM WITH CURRENT STATE AND LOCAL CODES AND REGULATIONS.

PROVIDE VAN ACCESSIBLE SIGNAGE AT LOCATIONS REQUIRED BY LOCAL CODES OR AS NOTED ON PLANS.

HANDICAP PARKING SIGN DETAIL N.T.S.

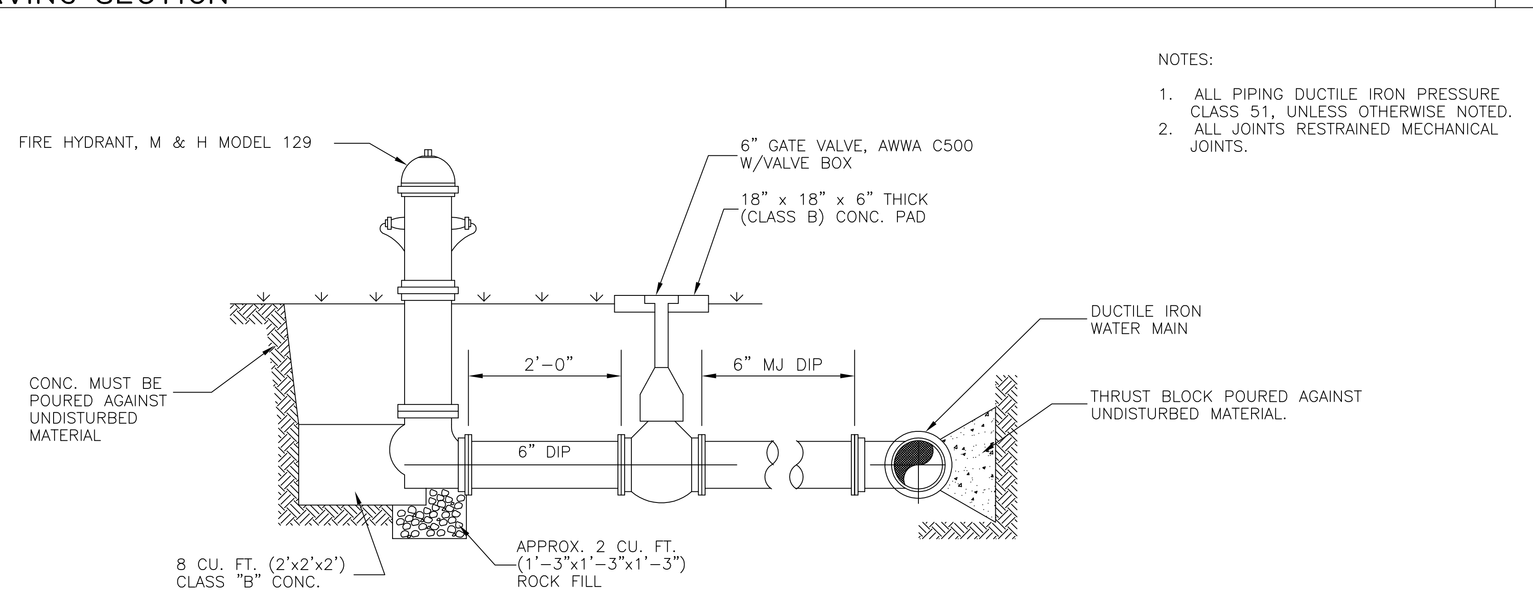

FIRE HYDRANT ASSEMBLY DETAIL N.T.S.

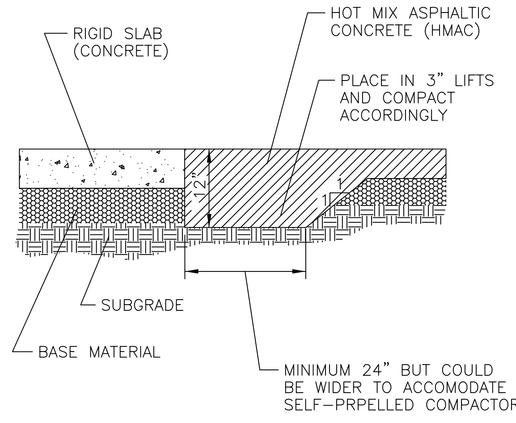

ASPHALT TO CONCRETE TRANSITION N.T.S.

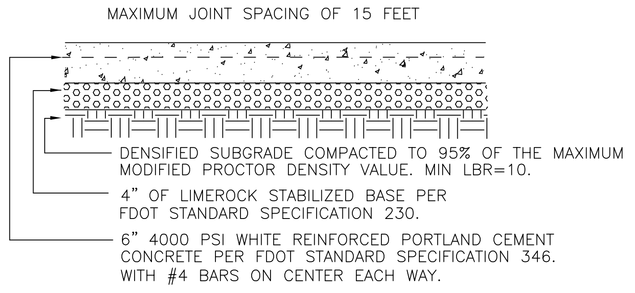

CONCRETE TANK SLAB DETAIL N.T.S.

SIGNAGE TO BE WHITE WITH BLACK LETTERING.

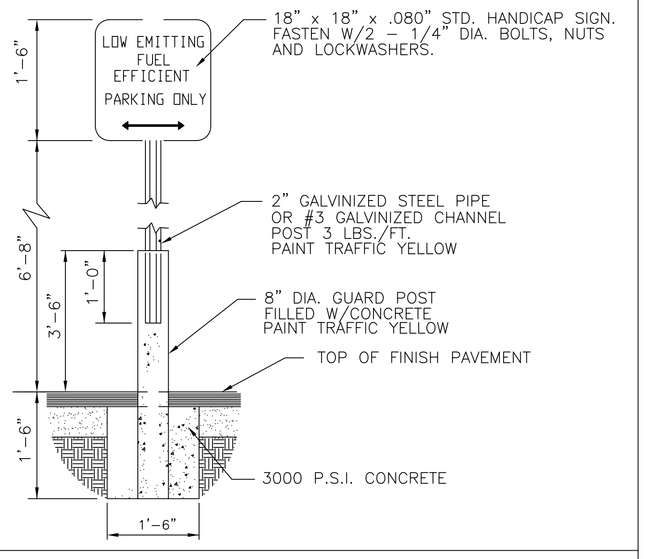

LOW EMISSIONS FUEL EFFICENT PARKING ONLY DETAIL N.T.S.

AAFES Real Estate Directorate
AAFES (RE-C) P.O.BOX 660320 DALLAS, TX 75266-0320

KEY PLAN:

DATE	REVISION NO. & DESCRIPTION	BY

MARK R. GONZALEZ LICENSE No. 48500 STATE OF FLORIDA PROFESSIONAL ENGINEER
02/15/2012

PARSONS WIBLE BRUMMAL ALKIRE / ARCHITECTS INC.
MONTGOMERY, ALABAMA

DESIGN BY:
CHECKED BY:

RECOMMENDED: DATE
APPROVED: DATE

ARMY & AIR FORCE EXCHANGE SERVICE
DEPARTMENTS OF THE ARMY & AIR FORCE

RE–C
REAL ESTATE DIRECTORATE

PROJECT:
TYNDALL AFB
CONSTRUCT SHOPPETTE/ FOOD/CLASS6/GAS

TYNDALL, AFB
FLORIDA

DRAWING TITLE:
SECTIONS & DETAILS

DATE:	SCALE:	SHEET:
18 JAN 2012	N.T.S.	SITE C501

DRAWING PROJECT NO.
0941–09–000003

GONZALEZ - STRENGTH & ASSOCIATES, INC.
ENGINEERING, LAND PLANNING, & SURVEYING
2176 PARKWAY LAKE DRIVE
HOOVER, ALABAMA 35244
PHONE: (205) 942-2466
FAX: (205) 942-3033
Gonzalez-Strength.com
© Copyright 2006
G.S.A. JOB NO. 09PWB35

AAFES Real Estate Directorate
AAFES (RE-C) P.O.BOX 660320 DALLAS, TX 75266-0320

KEY PLAN:

DATE	REVISION NO. & DESCRIPTION	BY

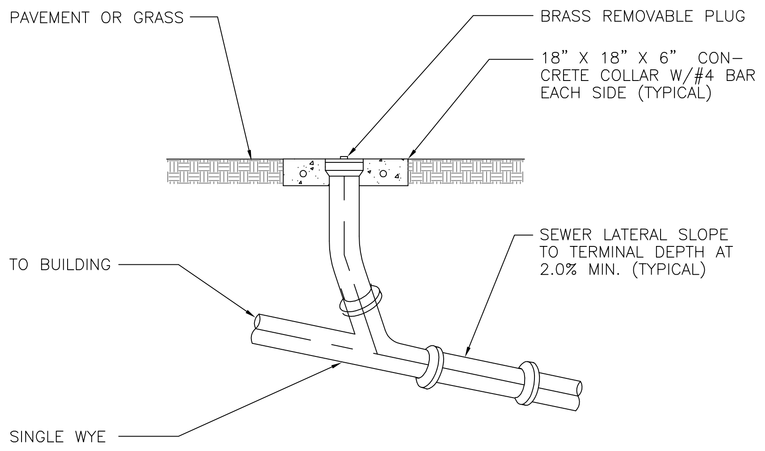

CLEAN OUT DETAIL N.T.S.

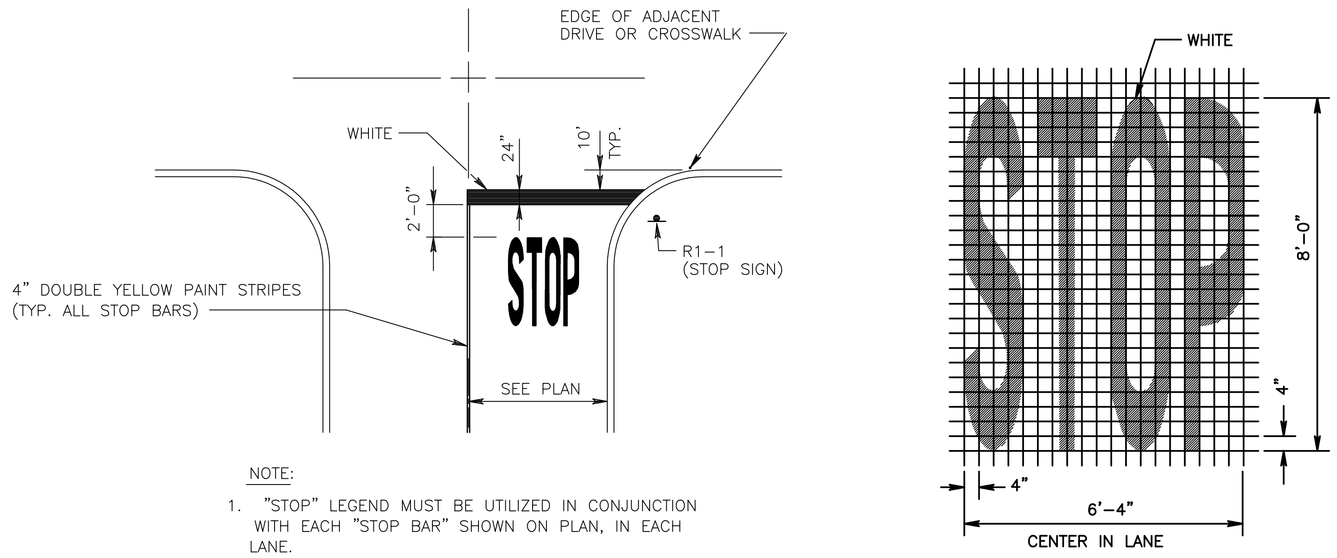

NOTE:
1. "STOP" LEGEND MUST BE UTILIZED IN CONJUNCTION WITH EACH "STOP BAR" SHOWN ON PLAN, IN EACH LANE.

STOP BAR LAYOUT & STOP BAR LEGEND DETAIL N.T.S.

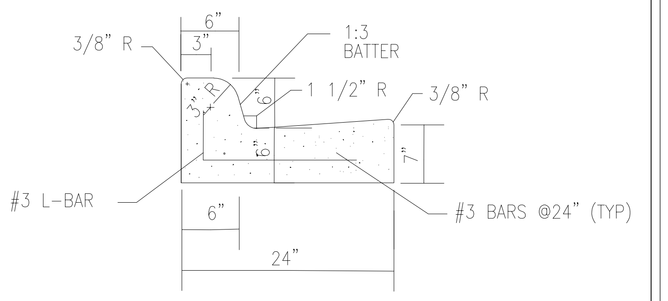

24" CURB AND GUTTER DETAIL N.T.S.

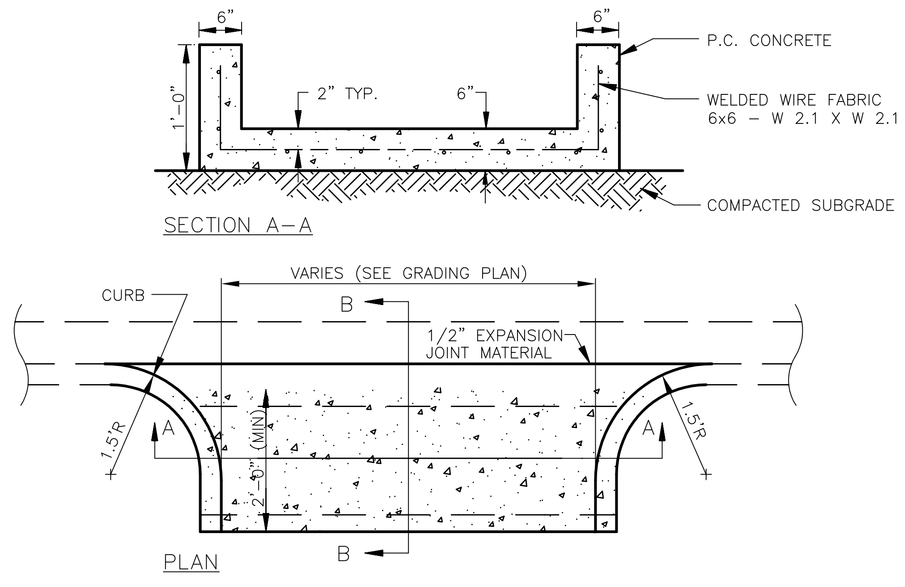

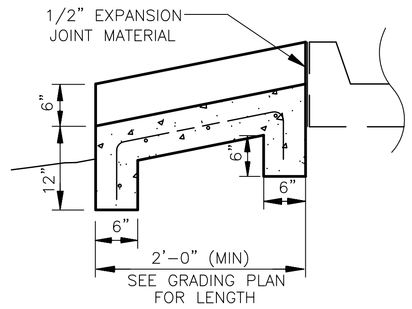

SECTION B–B

CONCRETE FLUME N.T.S.

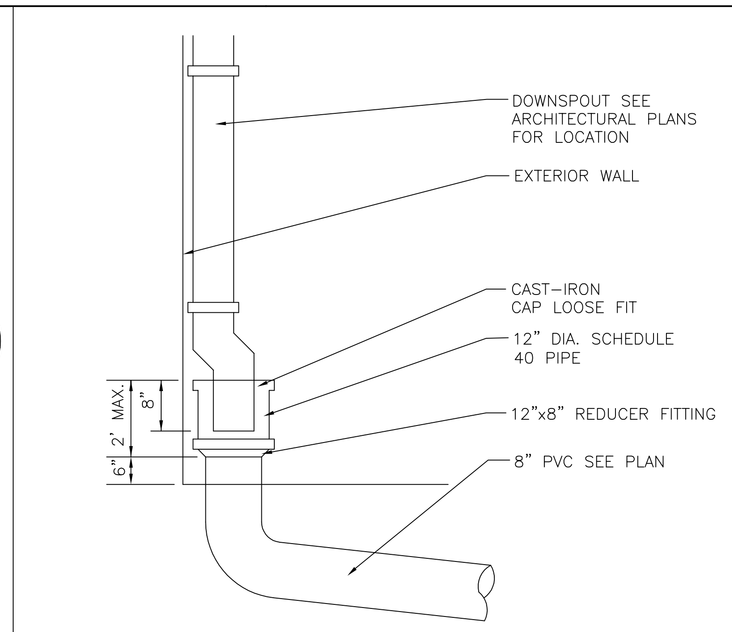

DOWNSPOUT CONNECTION N.T.S.

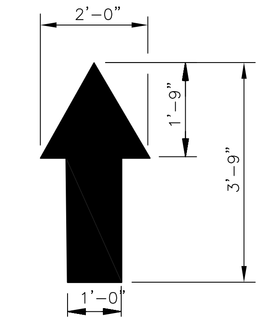

NOTE: ALL TRAFFIC FLOW DIRECTIONAL ARROWS TO BE REFLECTIVE WHITE PAINT.

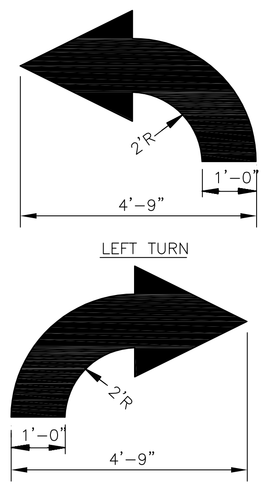

DIRECTIONAL ARROWS N.T.S.

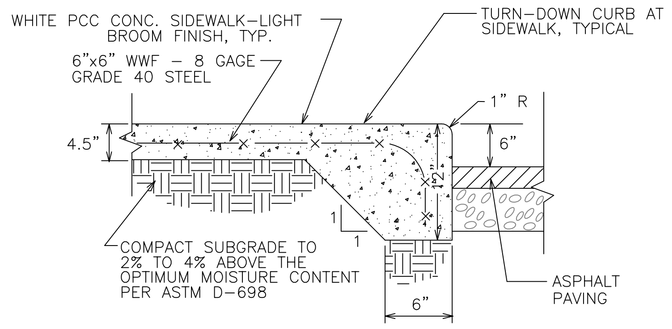

NOTE; PROVIDE TOOLED JOINTS AT 5'–0" O.C. IN ALL SIDEWALKS.

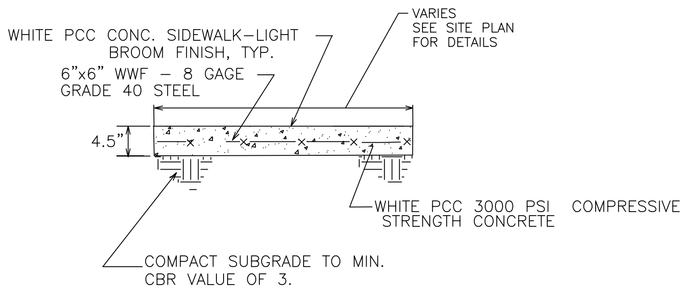

SIDEWALK DETAIL N.T.S.

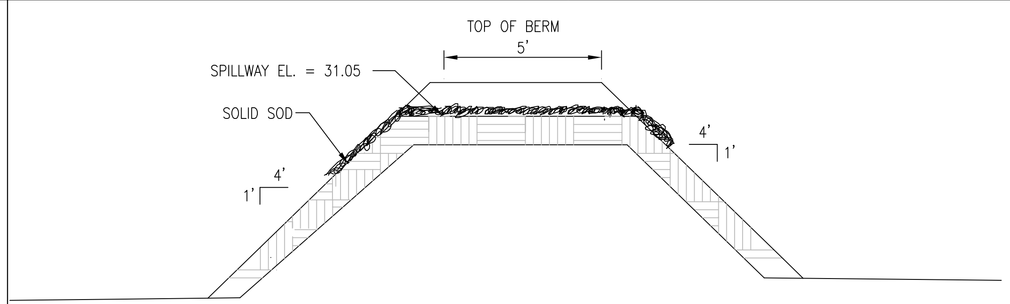

SPILLWAY

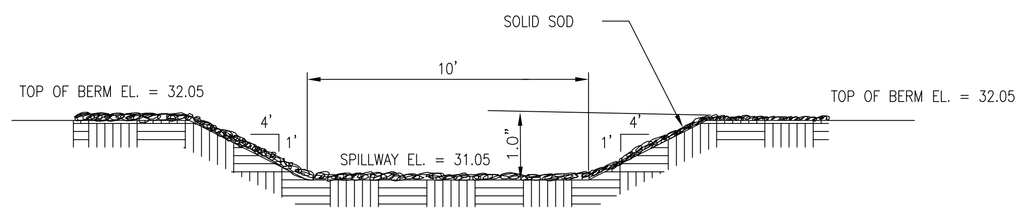

SPILLWAY DETAIL

SPILLWAY DETAIL N.T.S.

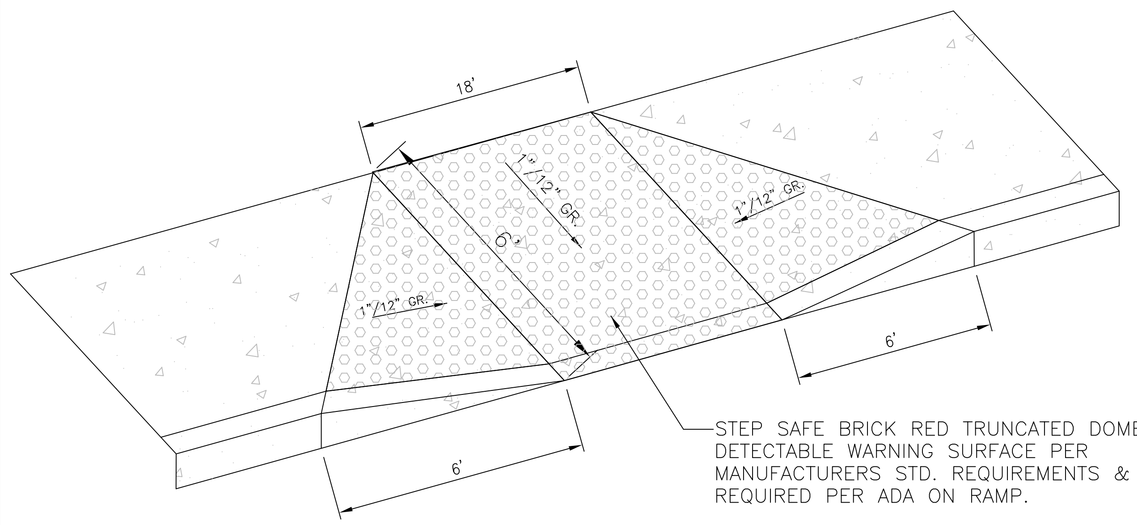

STEP SAFE BRICK RED TRUNCATED DOME DETECTABLE WARNING SURFACE PER MANUFACTURERS STD. REQUIREMENTS & SPECS. REQUIRED PER ADA ON RAMP.

HANDICAPPED RAMP DETAIL N.T.S.

MARK R. GONZALEZ LICENSE No. 48500 STATE OF FLORIDA PROFESSIONAL ENGINEER
02/15/2012

PARSONS WIBLE BRUMMAL ALKIRE / ARCHITECTS INC.
MONTGOMERY, ALABAMA

DESIGN BY:
CHECKED BY:

RECOMMENDED: DATE
APPROVED: DATE

ARMY & AIR FORCE EXCHANGE SERVICE
DEPARTMENTS OF THE ARMY & AIR FORCE

RE–C
REAL ESTATE DIRECTORATE

PROJECT:
TYNDALL AFB
CONSTRUCT SHOPPETTE/ FOOD/CLASS6/GAS

TYNDALL, AFB
FLORIDA

DRAWING TITLE:
SECTIONS & DETAILS

DATE:	SCALE:	SHEET:
18 JAN 2012	N.T.S.	SITE C502

DRAWING PROJECT NO.
0941–09–000003

GONZALEZ - STRENGTH & ASSOCIATES, INC.
ENGINEERING, LAND PLANNING, & SURVEYING
2176 PARKWAY LAKE DRIVE
HOOVER, ALABAMA 35244
PHONE: (205) 942-2466
FAX: (205) 942-3033
Gonzalez-Strength.com
© Copyright 2006
G.S.A. JOB NO. 09PWB35

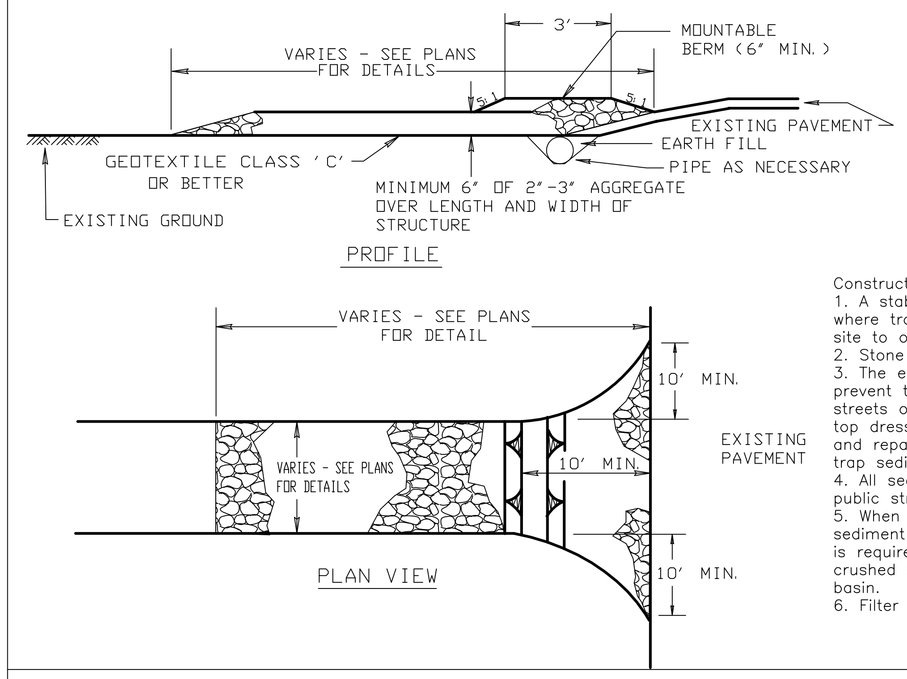

Construction Entrance Notes:
1. A stabilized pad of crushed stone shall be located where traffic will be entering or leaving a construction site to or from a public street.
2. Stone to be No. 57 filter stone.
3. The entrance shall be maintained in a condition which will prevent tracking or flowing of sediment onto public streets or existing pavement. This may require periodic top dressing with additional stone as conditions demand and repair and/or clean out of any measures used to trap sediment.
4. All sediment spilled, dropped, washed or tracked onto public streets must be removed immediately.
5. When necessary wheels must be cleaned to remove sediment prior to entering a public street. When washing is required, it shall be done on an area stabilized with crushed stone which drains into an approved sediment basin.
6. Filter fabric shall be Mirafi 500 or approved equal.

CONSTRUCTION ENTRANCE DETAIL

N.T.S.

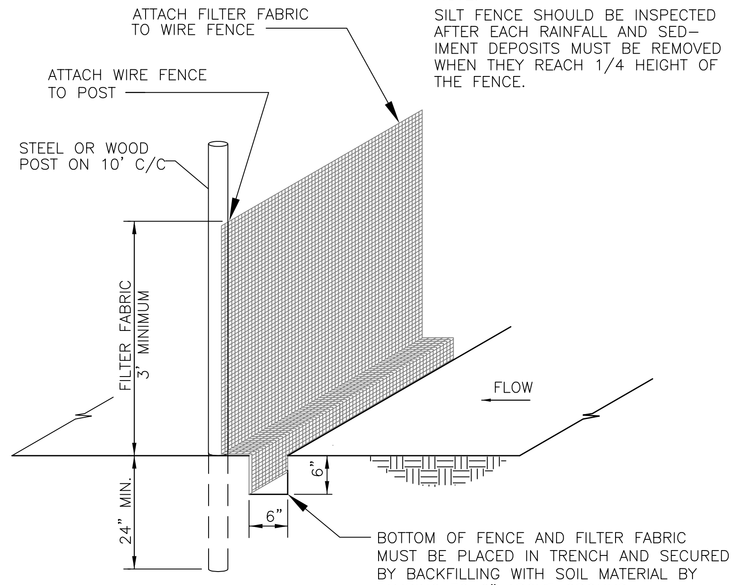

NOTE:
SILT FENCE SHOULD BE INSPECTED AFTER EACH RAINFALL AND SEDIMENT DEPOSITS MUST BE REMOVED WHEN THEY REACH 1/4 HEIGHT OF THE FENCE.

SILT FENCE DETAIL

N.T.S.

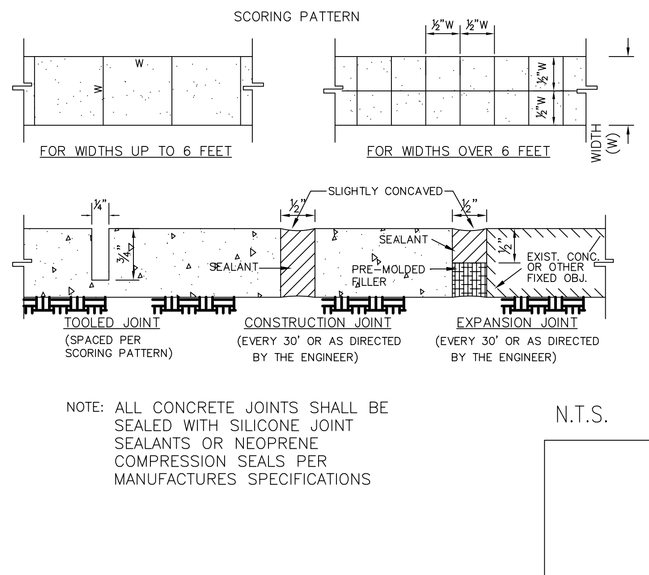

NOTE: ALL CONCRETE JOINTS SHALL BE SEALED WITH SILICONE JOINT SEALANTS OR NEOPRENE COMPRESSION SEALS PER MANUFACTURES SPECIFICATIONS

CONCRETE JOINT DETAILS

N.T.S.

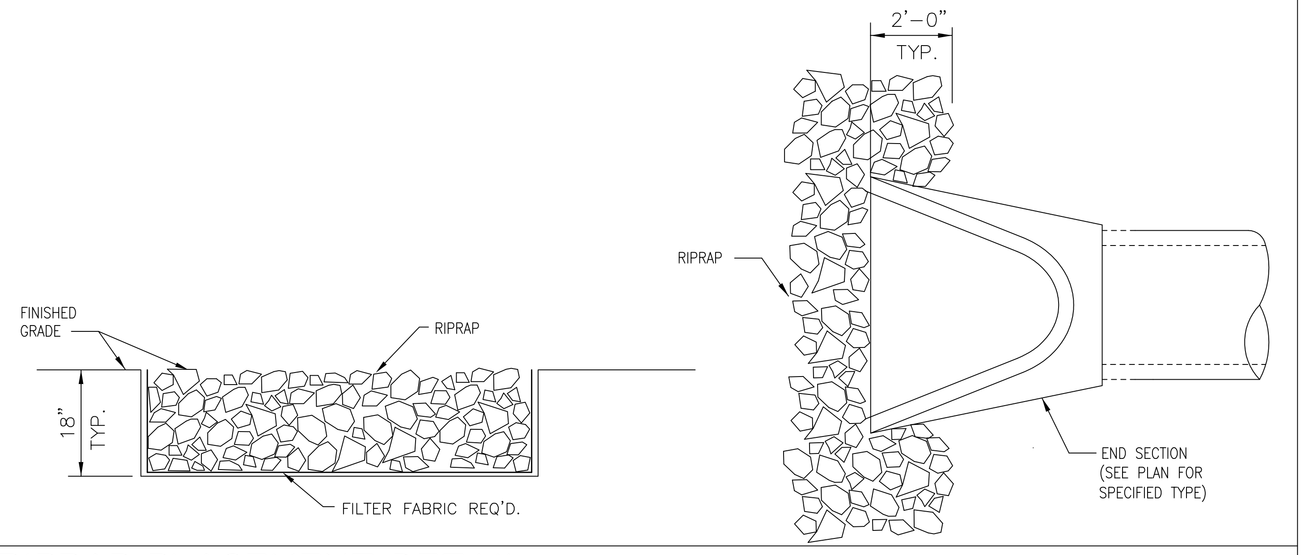

RIPRAP PLACEMENT DETAIL

N.T.S.

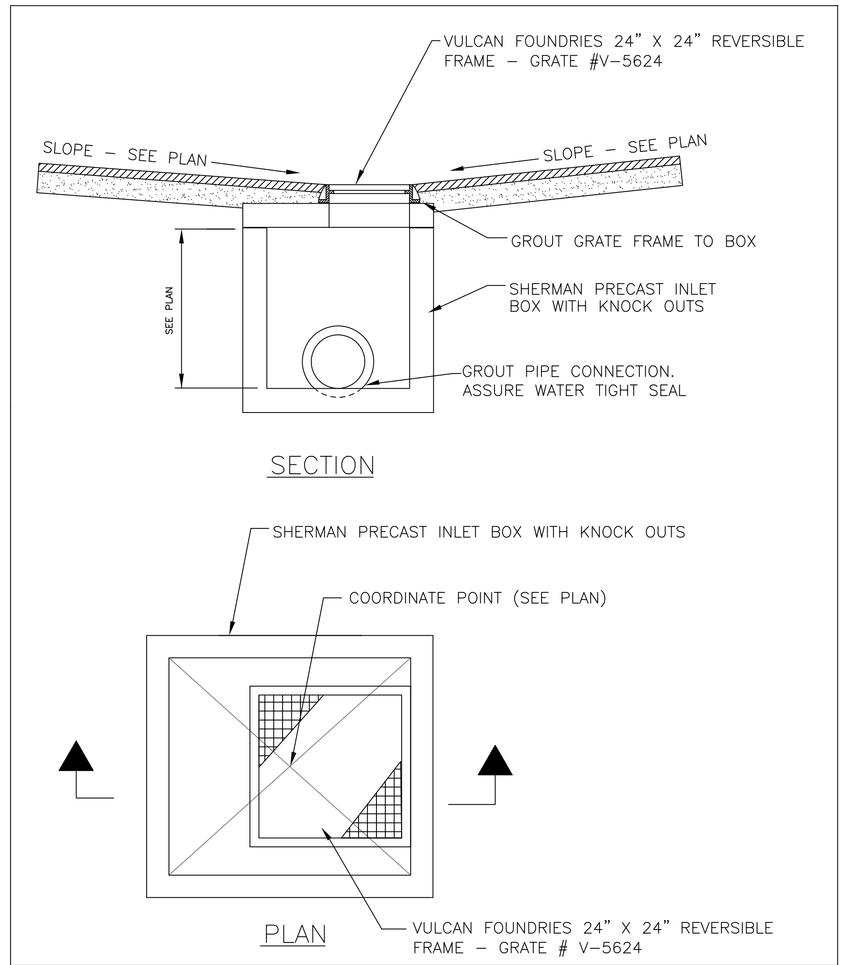

GRATE INLET DETAIL

N.T.S.

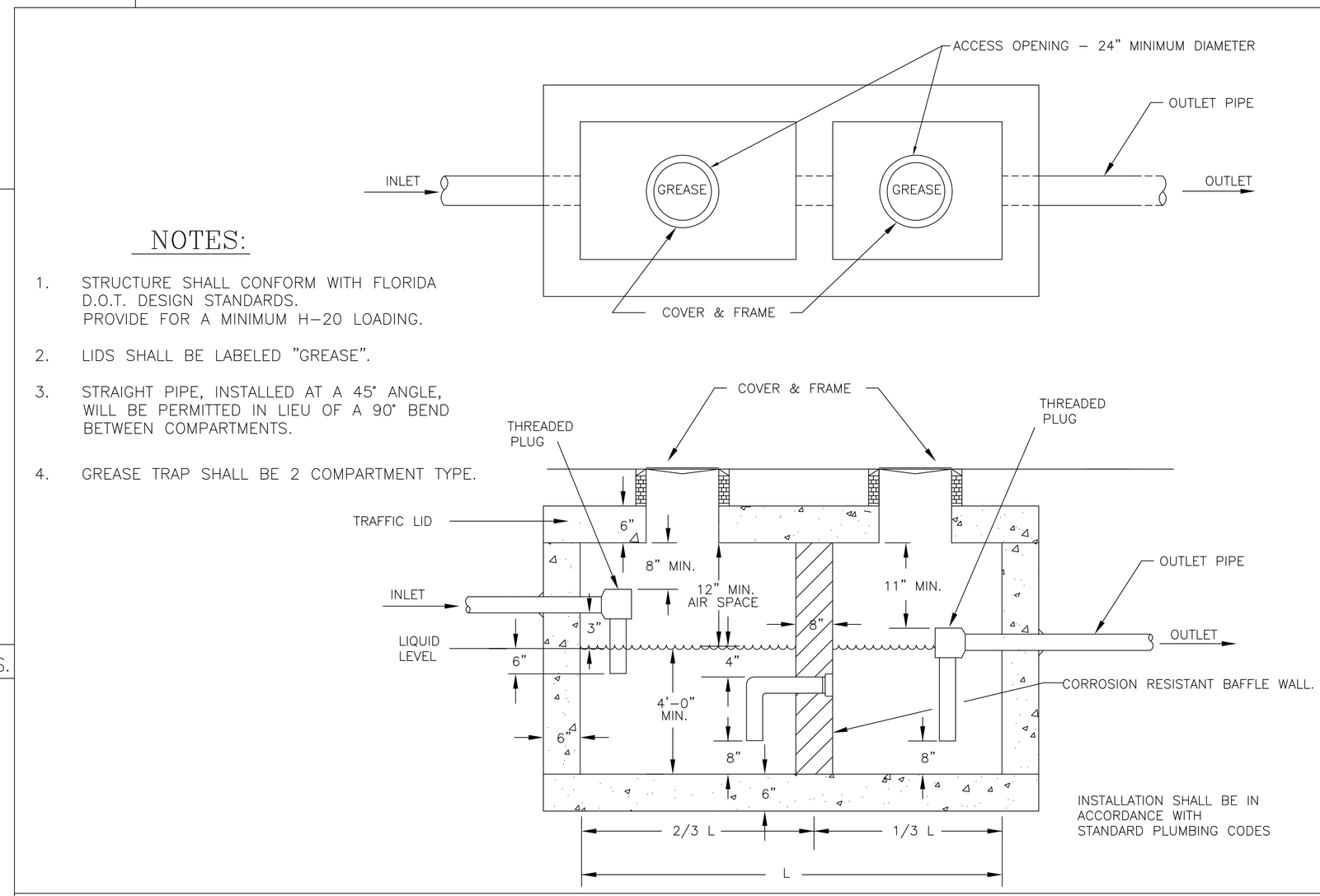

NOTES:

1. STRUCTURE SHALL CONFORM WITH FLORIDA D.O.T. DESIGN STANDARDS. PROVIDE FOR A MINIMUM H-20 LOADING.
2. LIDS SHALL BE LABELED "GREASE".
3. STRAIGHT PIPE, INSTALLED AT A 45° ANGLE, WILL BE PERMITTED IN LIEU OF A 90° BEND BETWEEN COMPARTMENTS.
4. GREASE TRAP SHALL BE 2 COMPARTMENT TYPE.

INSTALLATION SHALL BE IN ACCORDANCE WITH STANDARD PLUMBING CODES

GREASE TRAP DETAIL

AAFES Real Estate Directorate
AAFES (RE-C) P.O.BOX 660320 DALLAS, TX 75266-0320

KEY PLAN:

DATE	REVISION NO. & DESCRIPTION	BY

MARK R. GONZALEZ LICENSE No. 48500 STATE OF FLORIDA PROFESSIONAL ENGINEER
02/15/2012

PARSONS WIBLE BRUMMAL ALKIRE / ARCHITECTS INC.
MONTGOMERY, ALABAMA

DESIGN BY:
CHECKED BY:
RECOMMENDED: DATE
APPROVED: DATE

ARMY & AIR FORCE EXCHANGE SERVICE
DEPARTMENTS OF THE ARMY & AIR FORCE

RE-C
REAL ESTATE DIRECTORATE

PROJECT:
TYNDALL AFB
CONSTRUCT SHOPPETTE/ FOOD/CLASS6/GAS

TYNDALL, AFB
FLORIDA

DRAWING TITLE:
SECTIONS & DETAILS

DATE:	SCALE:	SHEET:
18 JAN 2012	N.T.S.	SITE C503

DRAWING PROJECT NO.
0941-09-000003

GONZALEZ - STRENGTH & ASSOCIATES, INC.
ENGINEERING, LAND PLANNING, & SURVEYING
2176 PARKWAY LAKE DRIVE
HOOVER, ALABAMA 35244
PHONE: (205) 942-2466
FAX: (205) 942-3033
Gonzalez-Strength.com
© Copyright 2006
G.S.A. JOB NO. 09PWB35

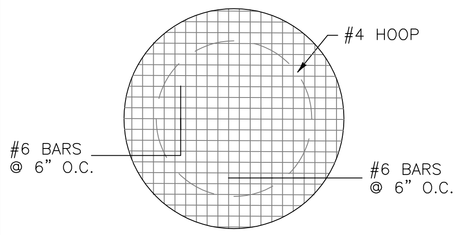

TOP SLAB REINFORCING

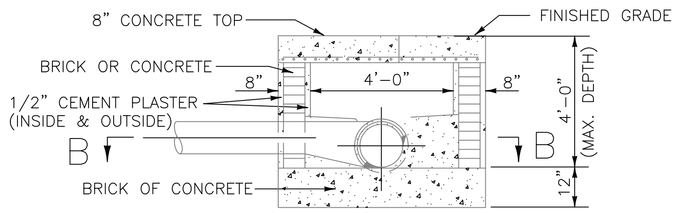

TYPICAL SECTION

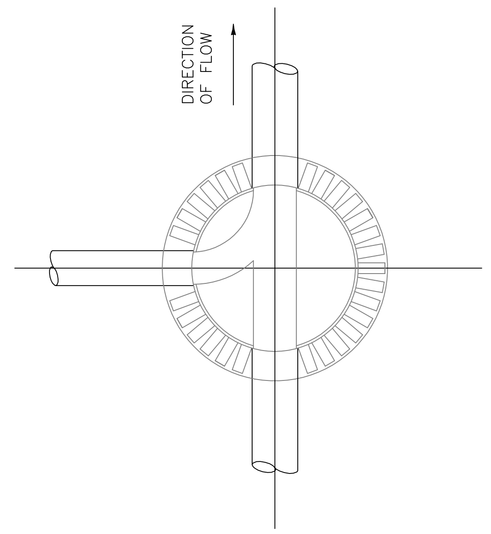

SECTION B–B

NOTE: CONCRETE DESIGN STRENGH
4000 P.S.I.

JUNCTION BOX DETAIL

N.T.S.

CONFIGURATION DETAIL

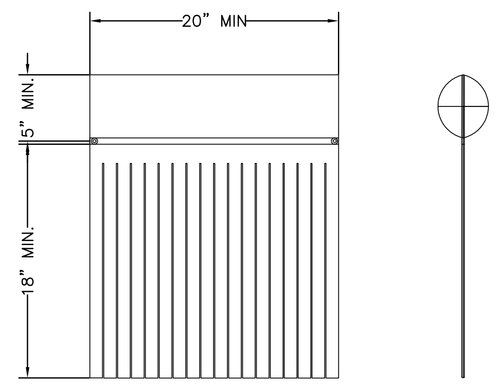

FRONT VIEW

SIDE VIEW

BIO-SKIRT ANTI-MICROBIAL AND HYDROCARBON
ADSORBING SKIRTED BOOM

INSTALLATION DETAIL

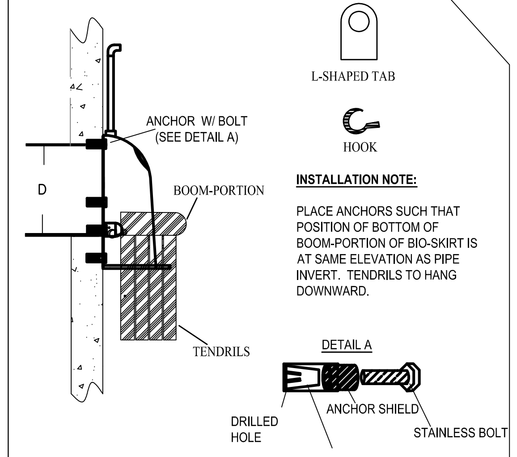

ANTI-MICROBIAL AND OIL ADSORBENT SPECIFICATION FOR CATCH BASINS AND WATER QUALITY STRUCTURES

DESCRIPTION	DATE	SCALE
BIO-SKIRT (TM) SPECIFICATION AND INSTALLATION (TYPICAL)	08/08/07	NONE
	DRAWING NUMBER	SP-BIO

CONFIGURATION DETAIL

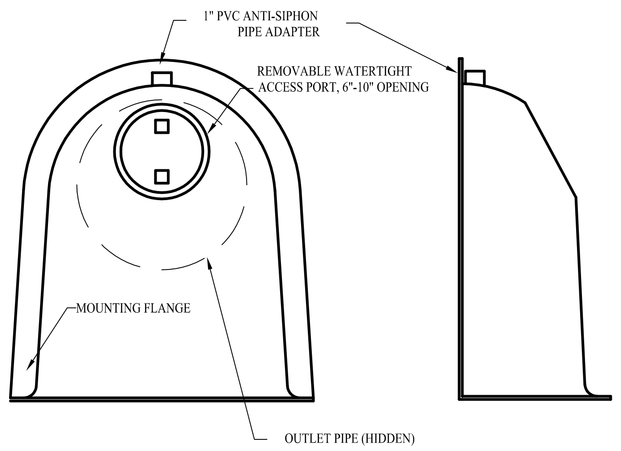

FRONT VIEW

SIDE VIEW

SNOUT OIL-WATER-DEBRIS SEPARATOR

NOTES:

1. ALL HOODS AND TRAPS FOR CATCH BASINS AND WATER QUALITY STRUCTURES SHALL BE AS MANUFACTURED BY:
   BEST MANAGEMENT PRODUCTS, INC.
   53 MT. ARCHER RD.
   LYME, CT 06371
   (860) 434-0277, (860) 434-3195 FAX
   TOLL FREE: (800) 504-8008 OR (888) 354-7585
   WEB SITE: www.bestmp.com
   OR PRE-APPROVED EQUAL
2. ALL HOODS SHALL BE CONSTRUCTED OF A GLASS REINFORCED RESIN COMPOSITE WITH ISO GEL COAT EXTERIOR FINISH WITH A MINIMUM 0.125" LAMINATE THICKNESS.
3. ALL HOODS SHALL BE EQUIPPED WITH A WATERTIGHT ACCESS PORT, A MOUNTING FLANGE, AND AN ANTI-SIPHON VENT AS DRAWN. (SEE CONFIGURATION DETAIL)
4. THE SIZE AND POSITION OF THE HOOD SHALL BE DETERMINED BY OUTLET PIPE SIZE AS PER MANUFACTURER'S RECOMMENDATION.
5. THE BOTTOM OF THE HOOD SHALL EXTEND DOWNWARD A DISTANCE EQUAL TO 1/2 THE OUTLET PIPE DIAMETER WITH A MINIMUM DISTANCE OF 6" FOR PIPES <12" I.D.
6. THE ANTI-SIPHON VENT SHALL EXTEND ABOVE HOOD BY MINIMUM OF 3" AND A MAXIMUM OF 24" ACCORDING TO STRUCTURE CONFIGURATION.
7. THE SURFACE OF THE STRUCTURE WHERE THE HOOD IS MOUNTED SHALL BE FINISHED SMOOTH AND FREE OF LOOSE MATERIAL.
8. THE HOOD SHALL BE SECURELY ATTACHED TO STRUCTURE WALL WITH 3/8' STAINLESS STEEL BOLTS AND OIL-RESISTANT GASKET AS SUPPLIED BY MANUFACTURER. (SEE INSTALLATION DETAIL)
9. INSTALLATION INSTRUCTIONS SHALL BE FURNISHED WITH MANUFACTURER SUPPLIED INSTALLATION KIT.
   INSTALLATION KIT SHALL INCLUDE:
   A. INSTALLATION INSTRUCTIONS
   B. PVC ANTI-SIPHON VENT PIPE AND ADAPTER
   C. OIL-RESISTANT CRUSHED CELL FOAM GASKET WITH PSA BACKING
   D. 3/8" STAINLESS STEEL BOLTS
   E. ANCHOR SHIELDS

US Patent # 6126817

INSTALLATION DETAIL

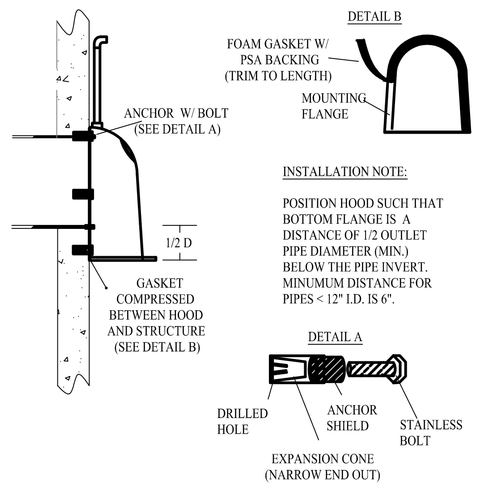

HOOD SPECIFICATION FOR CATCH BASINS AND WATER QUALITY STRUCTURES

DESCRIPTION	DATE	SCALE
OIL- DEBRIS HOOD SPECIFICATION AND INSTALLATION (TYPICAL)	09/08/00	NONE
	DRAWING NUMBER	SP-SN

NOTES:

1. All new and/or existing catch basins or water quality structures shall be outfitted with the Bio-Skirt(R) Bacteria and Hydrocarbon reducing skirted boom as manufactured by:
   BEST MANAGEMENT PRODUCTS, INC.
   53 MT. ARCHER RD.
   LYME, CT 06371
   (860) 434-0277, (860) 434-3195 FAX
   TOLL FREE: (800) 504-8008 OR (888) 434-0277
   WEB SITE: www.bmpinc.com
   or pre-approved equal.
2. The skirted boom shall be comprised of an upper boom portion that is an adsorbent fabric covered floating boom of 5" minimum diameter with an integral lower skirt portion comprised of fabric tendrils of an 18" minimum length that hang beneath the boom. Color to be integral and comply with Eglin Architectural Compatibility Standard.
3. All booms shall be made from geo-textile quality needle-woven filtration fabric manufactured from 100% recycled select fibers with a .125" minimum thickness.
4. All fabric shall be treated with a covalently surface bonded non-leaching antimicrobial agent and booms shall display a tag indicating "Antimicrobial".
5. The Bio-Skirt shall be positioned in front of the exit pipe and SNOUT® Oil-Debris Separator if so equipped (the preferred application of the Bio-Skirt is to be deployed with the SNOUT).
6. The skirted boom shall be securely attached to the structure wall on each side of the exit pipe with 3/8" stainless steel bolts, stainless steel tabs, plastic-composite hooks and elastomeric cord as found in manufacturer supplied installation kit.
7. For applications where multiple Bio-Skirts are deployed together for larger SNOUTs (e.g. on 24" and larger SNOUTs per schedule below*), connect skirts grommet to grommet with hooks and cord as supplied in the installation kit.

Typical Deployment Schedule:
12-18" SNOUT- One Bio-Skirt
24-30" SNOUT- Two Bio-Skirts
36-52" SNOUT- Three Bio-Skirts
72" and up, Call 800-504-8008 for guidance.

SNOUT US Patent # 6126817

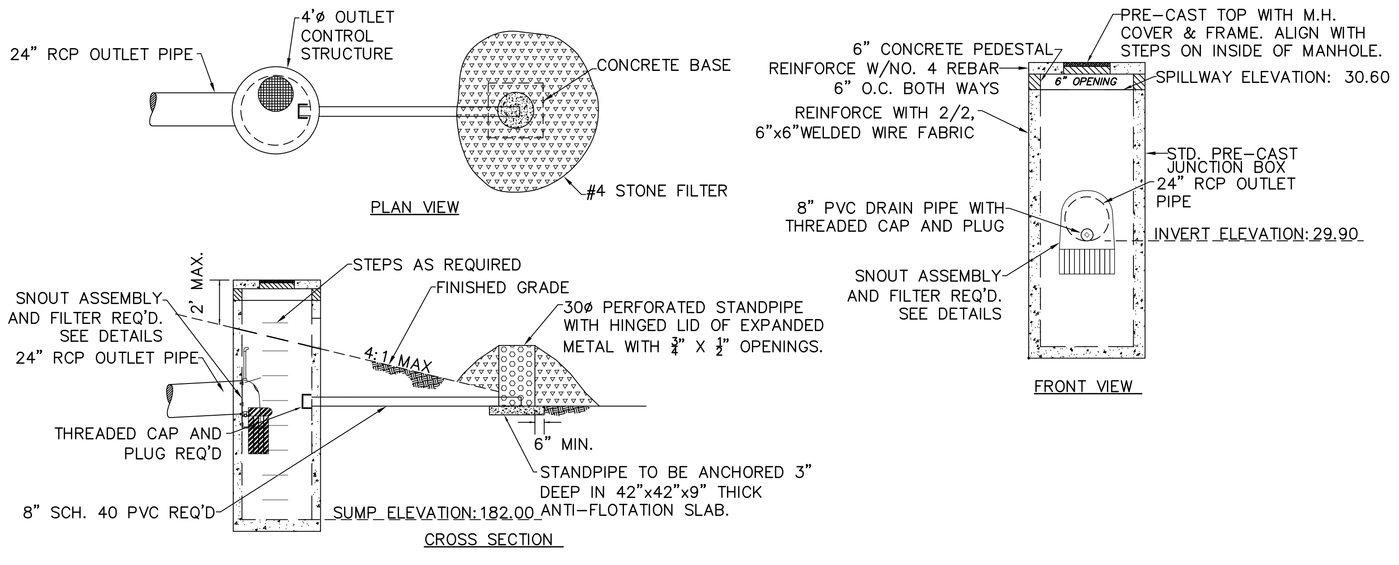

OUTLET CONTROL STRUCTURE

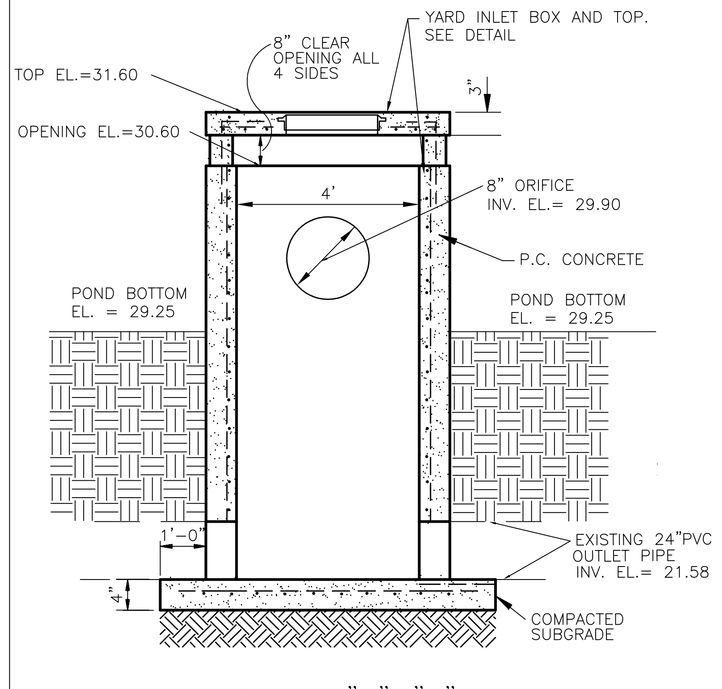

SECTION "A"–"A"

CONTROL STRUCTURE

N.T.S.

AAFES Real Estate Directorate
AAFES (RE-C) P.O.BOX 660320 DALLAS, TX 75266-0320

KEY PLAN:

DATE	REVISION NO. & DESCRIPTION	BY

MARK R. GONZALEZ — LICENSE No. 48500 — STATE OF FLORIDA — PROFESSIONAL ENGINEER
02/15/2012

PARSONS WIBLE BRUMMAL ALKIRE / ARCHITECTS INC.
MONTGOMERY, ALABAMA

DESIGN BY:
CHECKED BY:
RECOMMENDED: DATE
APPROVED: DATE

ARMY & AIR FORCE EXCHANGE SERVICE
DEPARTMENTS OF THE ARMY & AIR FORCE
RE–C
REAL ESTATE DIRECTORATE

PROJECT:
TYNDALL AFB
CONSTRUCT SHOPPETTE/ FOOD/CLASS6/GAS
TYNDALL, AFB
FLORIDA

DRAWING TITLE:
SECTIONS & DETAILS

DATE:	SCALE:	SHEET:
18 JAN 2012	N.T.S.	SITE C504

DRAWING PROJECT NO.
0941–09–000003

GONZALEZ - STRENGTH & ASSOCIATES, INC.
ENGINEERING, LAND PLANNING, & SURVEYING
2176 PARKWAY LAKE DRIVE
HOOVER, ALABAMA 35244
PHONE: (205) 942-2466
FAX: (205) 942-3033
Gonzalez-Strength.com
© Copyright 2006
G.S.A. JOB NO. 09PWB35

1. As the first order of business before any site mobilization and land disturbance, the General Contractor shall contact Northwest Florida Water Management District and obtain all permitting necessary for abandoning monitoring well MW-17 and installing a new monitoring well.
2. The abandonment of monitoring well MW-17 shall be done in accordance with Florida Department Environmental Protection, Northwest Florida Water Management District and Tyndall AFB Environmental.
3. General Contractor shall hire and pay a licensed water well contractor to install a new monitoring well. Water well contractor shall be licensed by the Northwest Florida Water Management District. The new well will be placed in an area clear of underground utilities and just outside the fuel canopy slab within 3' of the abandoned well. This installation will be done in accordance with Florida Department Environmental Protection, Northwest Florida Water Management District and Tyndall AFB Environmental.
4. The General Contractor will implement measures to protect all existing monitoring wells and all bio injection wells. All wells that are damaged as a result of operations of this contract shall be replaced by the General Contractor at his expense. Replacement shall be done in accordance with Florida Department Environmental Protection, Northwest Florida Water Management District and Tyndall AFB Environmental requirements.

- Permitting information and a list of licensed well contractors may be obtained at:
  Northwest Florida Water Management
  District Headquarters Office
  81 Water Management Drive
  Havana, Florida 32333
  Telephone (850) 539-5999
  http://www.nwfwmd.state.fl.us/permits/permits-wells.html

- All existing monitoring wells and bio injection wells will be incased in concrete RCP vaults as specified in the contract documents.

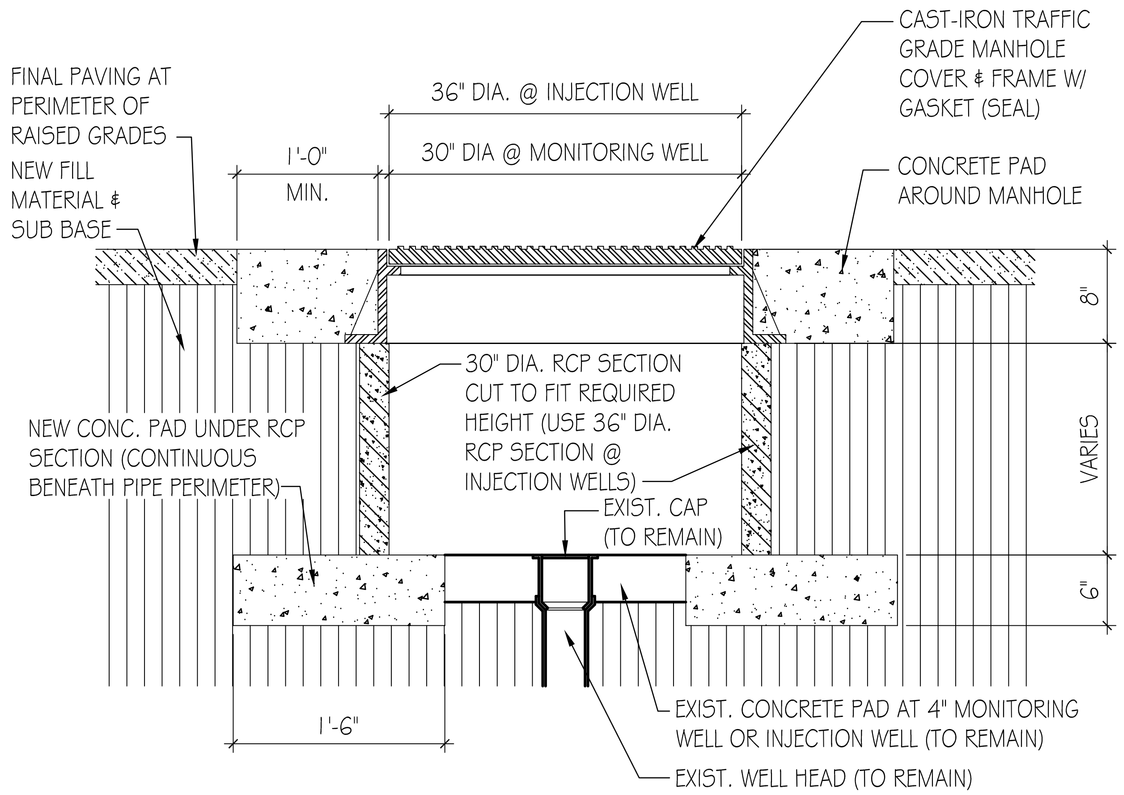

WELL HEAD RAISING CONCEPTUAL DIAGRAM N.T.S.

AAFES Real Estate Directorate
AAFES (RE-C) P.O.BOX 660320 DALLAS, TX 75266-0320

KEY PLAN:

DATE	REVISION NO. & DESCRIPTION	BY

MARK R. GONZALEZ LICENSE No. 48500 STATE OF FLORIDA PROFESSIONAL ENGINEER
06/10/2012

PARSONS WIBLE BRUMMAL ALKIRE / ARCHITECTS INC.
MONTGOMERY, ALABAMA

DESIGN BY:
CHECKED BY:
RECOMMENDED: DATE
APPROVED: DATE

ARMY & AIR FORCE EXCHANGE SERVICE
DEPARTMENTS OF THE ARMY & AIR FORCE

RE-C
REAL ESTATE DIRECTORATE

PROJECT:
TYNDALL AFB
CONSTRUCT SHOPPETTE/ FOOD/CLASS6/GAS

TYNDALL, AFB
FLORIDA

DRAWING TITLE:
MONITOR WELL SECTIONS, DETAILS, & NOTES.

DATE:	SCALE:	SHEET:
10 AUG 2012	N.T.S.	SITE C505

DRAWING PROJECT NO.
0941-09-000003

PROPOSED BUILDING
FF EL.=33.50

DUMPSTER PAD

GREASE TRAP

EXISTING IN GROUND FUEL TANK AREA

AIR / WATER / VACUUM STATION

MONUMENT SIGN (SEE DETAILS ON SHEET A301)

LEGEND

- AREA TO BE HYDRO SEEDED
- AREA TO BE SODDED
- EXISTING TREES TO REMAIN
- EXISTING TREES TO REMOVED

NORTH

LANDSCAPE PLAN

SCALE: 1" = 20'-0"

0 20ft 80ft

10ft 40ft

AAFES
Real Estate Directorate

AAFES (RE-C) P.O.BOX 660320 DALLAS, TX 75266-0320

KEY PLAN:

DATE	REVISION NO. & DESCRIPTION	BY

STATE OF ALABAMA · MONTGOMERY · EDWARD M. BRUMMAL · REGISTERED ARCHITECT · ALABAMA

PARSONS WIBLE BRUMMAL ALKIRE / ARCHITECTS INC.
MONTGOMERY, ALABAMA

DESIGN BY:

CHECKED BY:
EMB

RECOMMENDED: DATE

APPROVED: DATE

ARMY & AIR FORCE EXCHANGE SERVICE
DEPARTMENTS OF THE ARMY & AIR FORCE

RE-C
REAL ESTATE DIRECTORATE

PROJECT:
TYNDALL AFB
CONSTRUCT SHOPPETTE/
FOOD/CLASS 6/GAS

TYNDALL AFB,
FLORIDA

DRAWING TITLE:
LANDSCAPE PLAN

DATE:	SCALE:	SHEET:
18 JAN. 2012	AS NOTED	L100

DRAWING PROJECT NO.
0941-09-000003

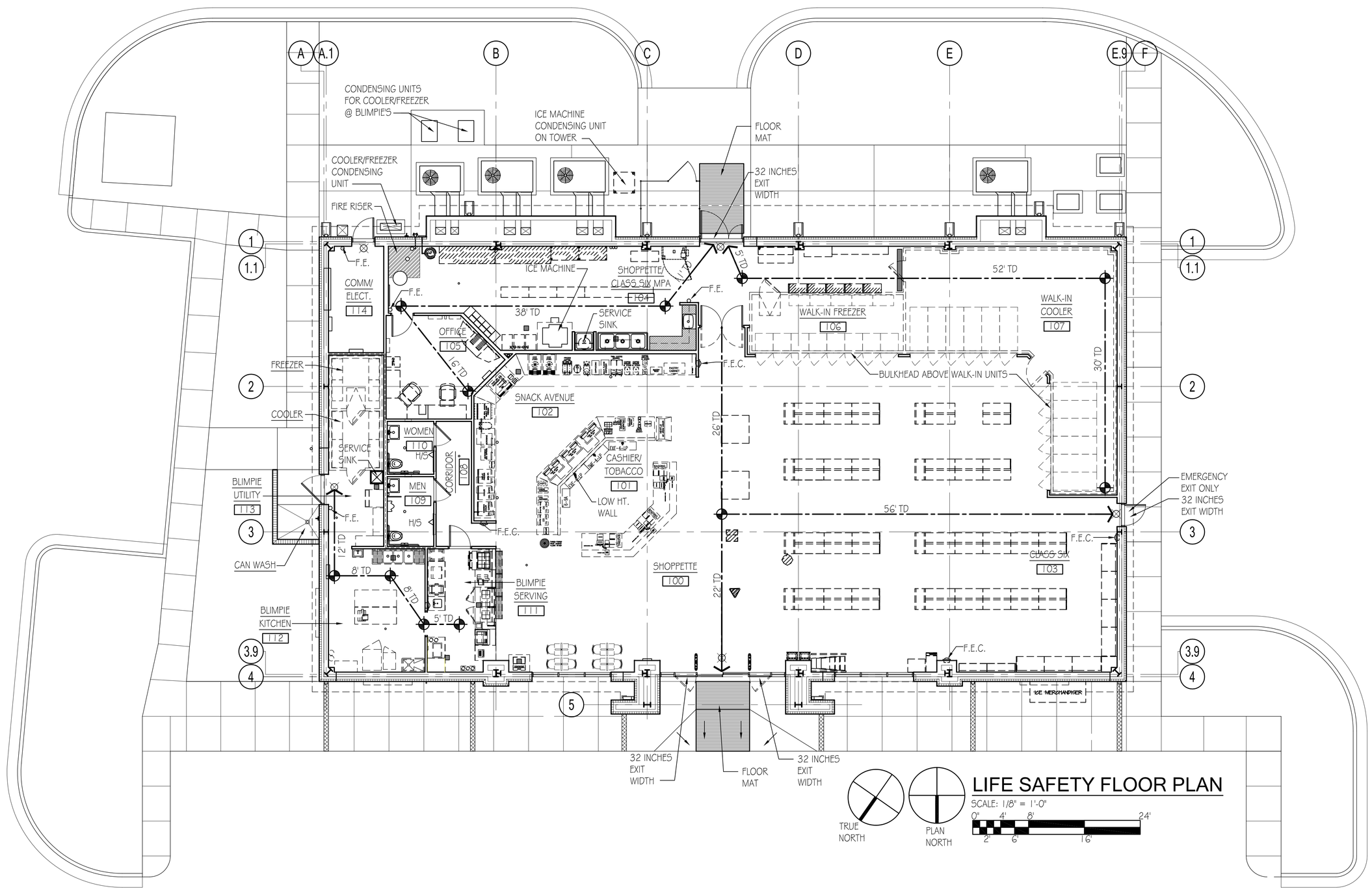

LIFE SAFETY FLOOR PLAN

SCALE: 1/8" = 1'-0"

0' 4' 8' 24'

2' 6' 16'

BUILDING CODE ANALYSIS

OWNER: ARMY AND AIR FORCE EXCHANGE SERVICE
PROJECT NAME : SHOPPETTE / FOOD / CLASS SIX / GAS
CITY/STATE: TYNDALL AFB, FLORIDA

BUILDING CODE INFORMATION

BUILDING CODE: INTERNATIONAL BUILDING CODE (IBC) - 2009 EDITION

UNIFORM FACILITIES CRITERIA (UFC) 3-600.01 (LATEST EDITION)
NATIONAL ELECTRICAL CODE (NEC) 2008
INTERNATIONAL MECHANICAL CODE - 2009
INTERNATIONAL FUEL GAS CODE - 2009
NFPA 101 - LIFE SAFETY CODE - 2009
NFPA 13 - 2010
NFPA 70 - 2008
NFPA 90A - 2009

BUILDING EGRESS CALCULATIONS

MERCANTILE OCCUPANCY - 30GSF / OCCUPANT - NFPA 101
TABLE 1004.1.1
BUILDING SQUARE FOOTAGE - 7,263 SQUARE FEET

REQUIRED EGRESS WIDTH (IBC TABLE 1004)

243 OCCUPANTS X 0.2 INCHES / PERSON = 49 INCHES

EXIT REQUIREMENT : 49 INCHES

EXIT WIDTH PROVIDED (32' DOOR = 160 INCHES)
MAXIMUM TRAVEL DISTANCE : 250 FEET, 300 FEET - COVERED MALLS
MAXIMUM DEAD END CORRIDOR : 20 FEET, 50 FEET FOR BUSINESS IN SPRINKLERED BUILDING

BUILDING CONSTRUCTION SIZE & TYPE

CONSTRUCTION TYPE : 11B - 7,263 SF (HEATED & COOLED)
MAXIMUM AREA : UNLIMITED WHEN OPEN SPACE OF AT LEAST 60 FEET PROVIDED ON ALL SIDES (IBC 507.3) IN FULLY SPRINKLERED BUILDING
MAXIMUM HEIGHT : 65 FEET

FIRE PROTECTION : AUTOMATIC FIRE SPRINKLER (ENTIRE BUILDING) PROVIDED PER IBC 903 - WET PIPE AT INTERIOR AREAS,
FIRE EXTINGUISHERS : PER NFPA 10
FIRE DETECTION AND ALARM : PER IBC 907

FIRE RESISTANCE REQUIREMENTS (TYPE II B)

OCCUPANCY SEPARATION : NOT APPLICABLE, ENTIRE BUILDING CONSIDERED AS MERCANTILE OCCUPANCY (TABLE 508.3.21)
FLOOR CONSTRUCTION: 0 HRS IBC 601
STRUCTURAL FRAME : 0 HRS ------- IBC 601
ROOF CONSTRUCTION : 0 HRS ------ IBC 601
EXTERIOR WALLS SEPARATION > 30 FEET = 0 HRS - IBC 602
TENANT SEPARATION : 1 HR - IBC 7084

PLUMBING CALCULATIONS - IPC 2009 TABLE 403.1

MERCANTILE : 243 OCCUPANTS
1 WATER CLOSET PER 500 OCCUPANTS - 1 REQUIRED
1 LAVATORY PER 750 OCCUPANTS - 1 REQUIRED
1 WATER FOUNTAIN PER 1000 OCCUPANTS - 1 REQUIRED (AT SNACK AVE. DISP.)
1 SERVICE SINK REQUIRED, 2 SERVICE SINKS PROVIDED

FACILITES PROVIDED :
MEN : 1 WC, 1 URINAL, 1 LAVATORY
WOMEN : 1 WC, 1 LAVATORY

LEGEND

	1 HR TENANT SEPARATION WALL - 1 LAYER 5/8" TYPE 'X' FIRE RATED GYPSUM BOARD EACH SIDE OF 3 5/8" METAL STUDS @ 16" O.C. FULL HEIGHT TO UNDERSIDE OF ROOF DECK	IBC- SECTION 708.4. EXCEPTION 4
	EXIT ROUTE	
F.E.C.	F.E. WALL MOUNTED FIRE EXTINGUISHER ON BRACKET	
F.E.C.	FIRE EXTINGUISER CABINET	
T.D.	TRAVEL DISTANCE	
	EXIT LIGHT	
H/S	HORN / STROBE	

AAFES Real Estate Directorate
AAFES (RE-C) P.O.BOX 660320 DALLAS, TX 75266-0320

KEY PLAN:

DATE	REVISION NO. & DESCRIPTION	BY

STATE OF ALABAMA · MONTGOMERY · EDWARD M. BRUMMAL · REGISTERED ARCHITECT

PARSONS WIBLE BRUMMAL ALKIRE / ARCHITECTS INC.
MONTGOMERY, ALABAMA

DESIGN BY:
CHECKED BY: EMB
RECOMMENDED: DATE
APPROVED: DATE

ARMY & AIR FORCE EXCHANGE SERVICE
DEPARTMENTS OF THE ARMY & AIR FORCE

RE-C
REAL ESTATE DIRECTORATE

PROJECT:
TYNDALL AFB
CONSTRUCT SHOPPETTE/ FOOD/CLASS 6/GAS

TYNDALL AFB, FLORIDA

DRAWING TITLE:
LIFE SAFETY PLAN

DATE: 18 JAN. 2012
SCALE: AS NOTED
SHEET: LS100
DRAWING PROJECT NO. 0941-09-000003

LEGEND:

- CONCRETE PAVING
- CABINET WORK IN THE CONTRA (CF/CI)
- CHASE FOR MECHANICAL DUCT WORK
- EXTERIOR WALL BRICK VENEER & STUDS (8" STUDS, 16" O.C.)
- INTERIOR WALL-METAL STUDS (3⅝" METAL STUDS @ 16" O.C. WITH ⅝" GYPSUM BOARD ON EACH SIDE)
- 016B — DOOR & DOOR MARKER
- 6 — WINDOW MARKER
- B / A303 — SECTION MARKER
- 8 / A500 — INTERIOR ELEVATION MARKER
- OFFICE / 017 — ROOM NAME & NUMBER MARKER
- = = = = EQUIPMENT THAT IS AF/AI

ABBREVIATIONS:

A.F.F.	ABOVE FINISH FLOOR
B.B.	BULLETIN BOARD
C&G	CURB & GUTTER
CONC.	CONCRETE
C.G.	CORNER GUARD
C.J.	CONTROL JOINT
C.O.	CLEAN OUT
D.S.	DOWN SPOUT
E.A.S.	ELECTRIC SALES SURVEILLANCE
F.D.	FLOOR DRAIN
F.E.C.	FIRE EXTINGUISHER & CABINET
E.J.	EXPANSION JOINT
F.E.	FIRE EXTINGUISHER ON BRACKET
F.S.	FLOOR SINK
H.B.	HOSE BIB
M.T.	METAL THRESHOLD
MB.T.	MARBLE THRESHOLD
S.B.	SPLASH BLOCK
W.H.	WATER HEATER

NOTE 1:

PROVIDE 4" DIAMETER SCHEDULE 40 PVC CONDUIT FOR PYTHON ACCESS TO DRINK DISPENSING UNIT. (FULL HEIGHT OF WALL).

NOTE: GENERAL CONTRACTOR TO RUN REFRIGERANT LINE TO CONDENSERS FOR WALK-INS, COORDINATE W/ MANUF.

NOTE: SEE CIVIL ENGINEERING DRAWINGS FOR PARKING SPACE LAYOUTS.

NOTE: SEE TOILET PLANS ON SHEET A401.

NOTE: SEE LARGE SCALE SNACK AVENUE PLAN ON SHEET A401.

NOTE: SEE LARGE SCALE BLIMPIE PLAN ON SHEET A402.

FLOOR PLAN

SCALE: 1/4" = 1'-0"

FINISH FLOOR ELEVATION = 33.50

TRUE NORTH

PLAN NORTH

AAFES Real Estate Directorate

AAFES (RE-C) P.O.BOX 660320 DALLAS, TX 75266-0320

KEY PLAN:

DATE	REVISION NO. & DESCRIPTION	BY

STATE OF ALABAMA · EDWARD BRUMMAL · ALABAMA · REGISTERED ARCHITECT

PARSONS WIBLE BRUMMAL ALKIRE / ARCHITECTS INC.
MONTGOMERY, ALABAMA

DESIGN BY:

CHECKED BY: EMB

RECOMMENDED: DATE

APPROVED: DATE

ARMY & AIR FORCE EXCHANGE SERVICE
DEPARTMENTS OF THE ARMY & AIR FORCE

RE-C
REAL ESTATE DIRECTORATE

PROJECT:
TYNDALL AFB
CONSTRUCT SHOPPETTE/ FOOD/CLASS 6/GAS

TYNDALL AFB, FLORIDA

DRAWING TITLE:
FLOOR PLAN

DATE:	SCALE:	SHEET:
18 JAN. 2012	1/4" = 1'-0"	A101

DRAWING PROJECT NO.
0941-09-000003

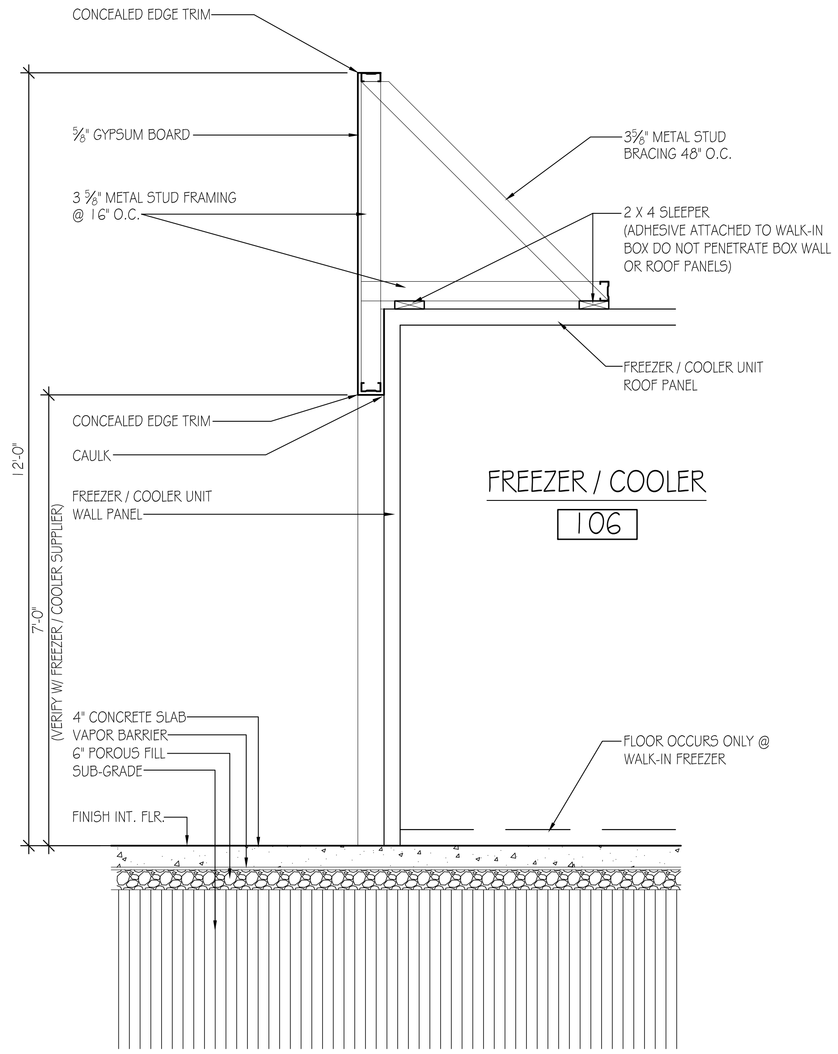

FREEZER / COOLER
106

NOTE:
VERIFY SIZE AND HEIGHT OF WALK-IN FREEZER / COOLER UNIT AND CONSTRUCT BULKHEAD ABOVE THESE UNITS ONCE WALK-INS ARE INSTALLED.

A / A102 WALL SECTION
SCALE: 3/4" = 1'-0"
0" 4" 9" 2' 4'
2 6 12 3

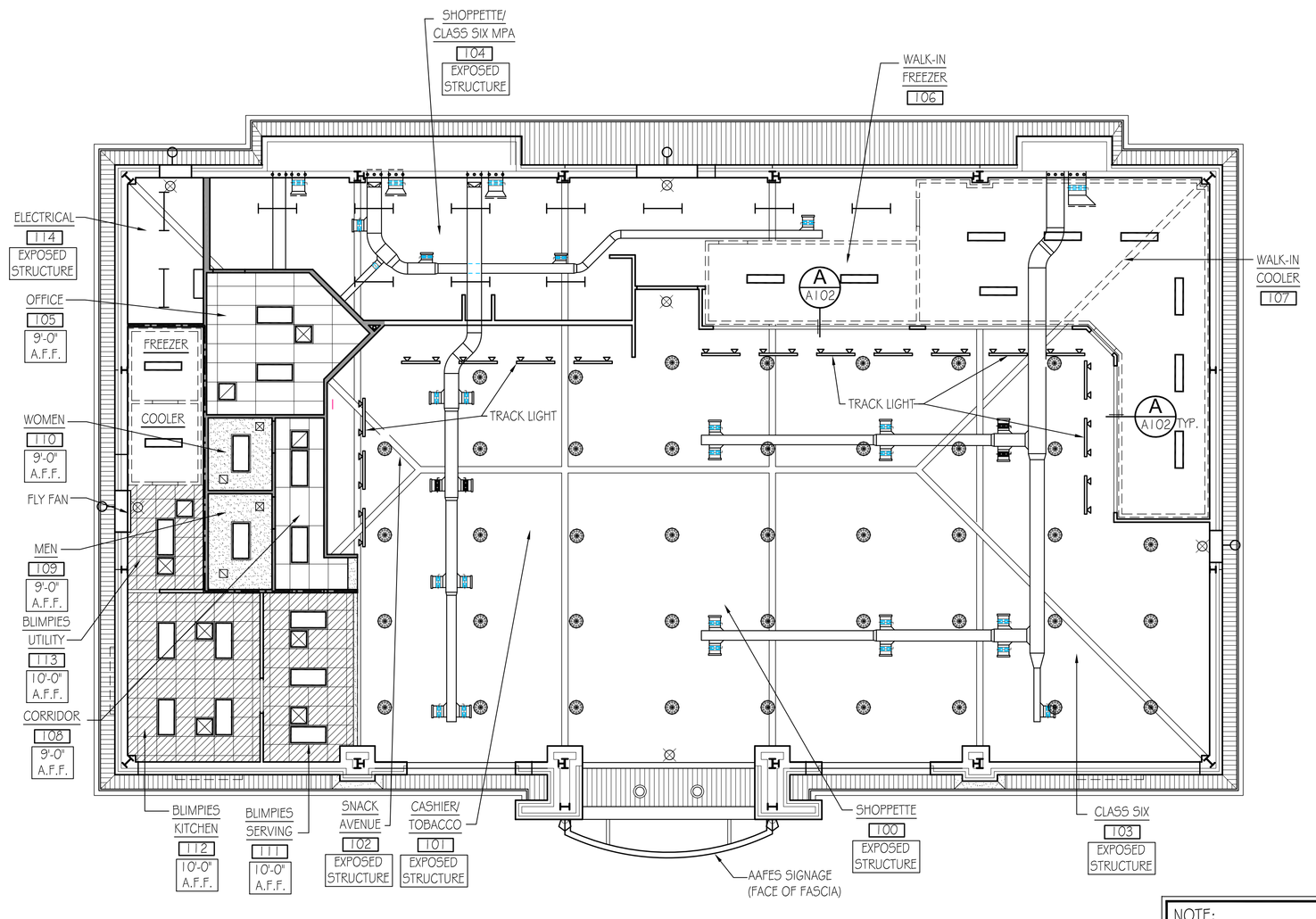

TRUE NORTH
PLAN NORTH

REFLECTED CEILING PLAN
SCALE: 1/8" = 1'-0"
0" 4' 8' 24'
2' 6' 16'

NOTE:
PROVIDE UNI-STRUT FRAMING AT UNDERSIDE OF ROOF STRUCTURE PURLINS FOR USE IN SECURING BRAIDED STAINLESS STEEL WIRE SUPPORTS SPACED APPROPRIATELY TO SUPPORT ALL AAFES SUPPLIED HANGING CEILING ELEMENTS AND TRACK LIGHTING TRACKS.

LEGEND

- FULL HEIGHT WALL TO EXTEND FROM F.F. TO BOTTOM OF STRUCTURE ABOVE
- WALL TO EXTEND 12'-0" FROM F.F. TO TOP OF WALL
- 1 HOUR FIRE RATED PARTITION
- EXPOSED STRUCTURE RIGID FRAME BEAM AND RIGID INSULATION
- 2X2 SCRUBBABLE LAY-IN CEILING TILE
- 2X4 ACOUSTICAL LAY-IN CEILING TILE
- GYPSUM BOARD CEILING / SOFFIT
- ALUMINUM SOFFIT
- 2X4 FLUORESCENT LIGHT FIXTURE
- PENDANT MOUNTED 1X4 FLUORESCENT LIGHT FIXTURE
- SURFACE MOUNTED 1X4 FLUORESCENT LIGHT FIXTURE
- SUSPENDED TRACK LIGHTING
- RECESSED DOWN LIGHT
- PENDANT MOUNTED LIGHT FIXTURE
- EXTERIOR LIGHT FIXTURE
- SUPPLY AIR DIFFUSERS
- RETURN AIR GRILLES
- EXHAUST FAN GRILLES
- SUPPLY AIR DIFFUSERS
- EXIT LIGHT

NOTE:
LIGHTS IN FREEZER/COOLER ARE CF/CI

AAFES
Real Estate Directorate
AAFES (RE-C) P.O.BOX 660320 DALLAS, TX 75266-0320

KEY PLAN:

DATE	REVISION NO. & DESCRIPTION	BY

STATE OF ALABAMA · MONTGOMERY · EDWARD MARTIN BRUMMAL · 26511 · REGISTERED ARCHITECT · ALABAMA

PARSONS WIBLE BRUMMAL ALKIRE / ARCHITECTS INC.
MONTGOMERY, ALABAMA

DESIGN BY:
CHECKED BY: EMB
RECOMMENDED: DATE
APPROVED: DATE

ARMY & AIR FORCE EXCHANGE SERVICE
DEPARTMENTS OF THE ARMY & AIR FORCE

RE-C
REAL ESTATE DIRECTORATE

PROJECT:
TYNDALL AFB
CONSTRUCT SHOPPETTE/ FOOD/CLASS 6/GAS

TYNDALL AFB, FLORIDA

DRAWING TITLE:
REFLECTED CEILING PLAN

DATE: 18 JAN. 2012
SCALE: AS NOTED
SHEET: A102
DRAWING PROJECT NO. 0941-09-000003

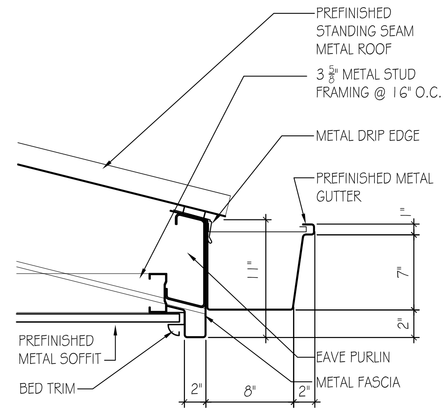

1 A103 **EAVE DETAIL**
SCALE: 1 1/2" = 1'-0"
0" 4" 9" 2'
2" 6" 12"

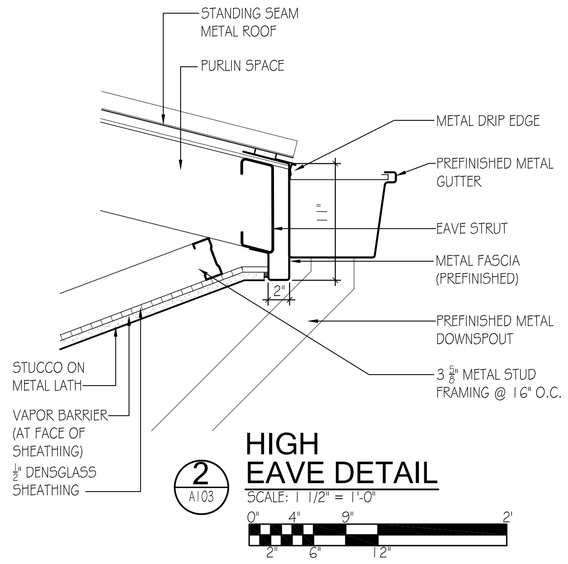

2 A103 **HIGH EAVE DETAIL**
SCALE: 1 1/2" = 1'-0"
0" 4" 9" 2'
2" 6" 12"

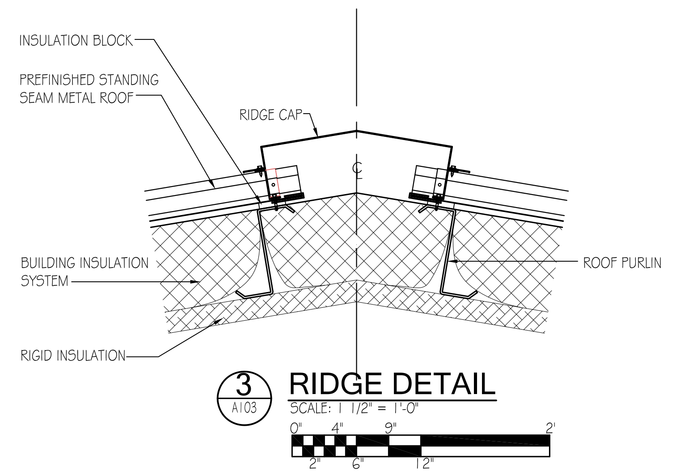

3 A103 **RIDGE DETAIL**
SCALE: 1 1/2" = 1'-0"
0" 4" 9" 2'
2" 6" 12"

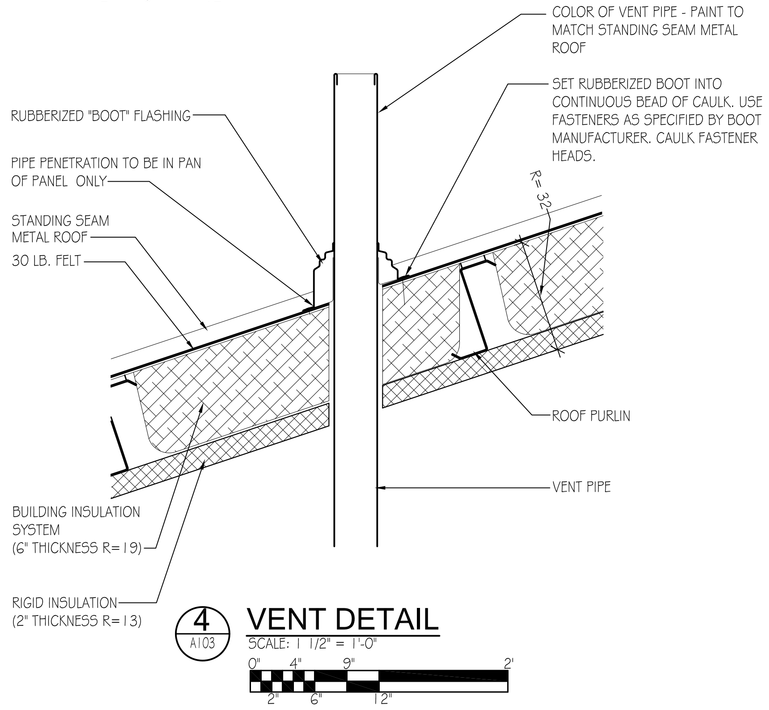

4 A103 **VENT DETAIL**
SCALE: 1 1/2" = 1'-0"
0" 4" 9" 2'
2" 6" 12"

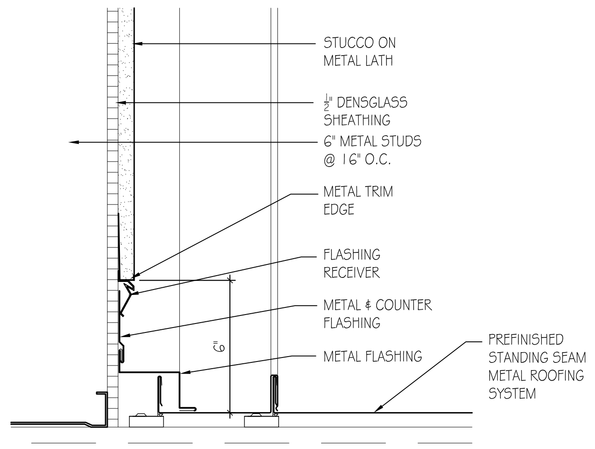

5 A103 **WALL TO ROOF FLASHING DETAIL**
SCALE: 3" = 1'-0"
0" 1" 3" 6" 12"
1/2" 2" 4" 9"

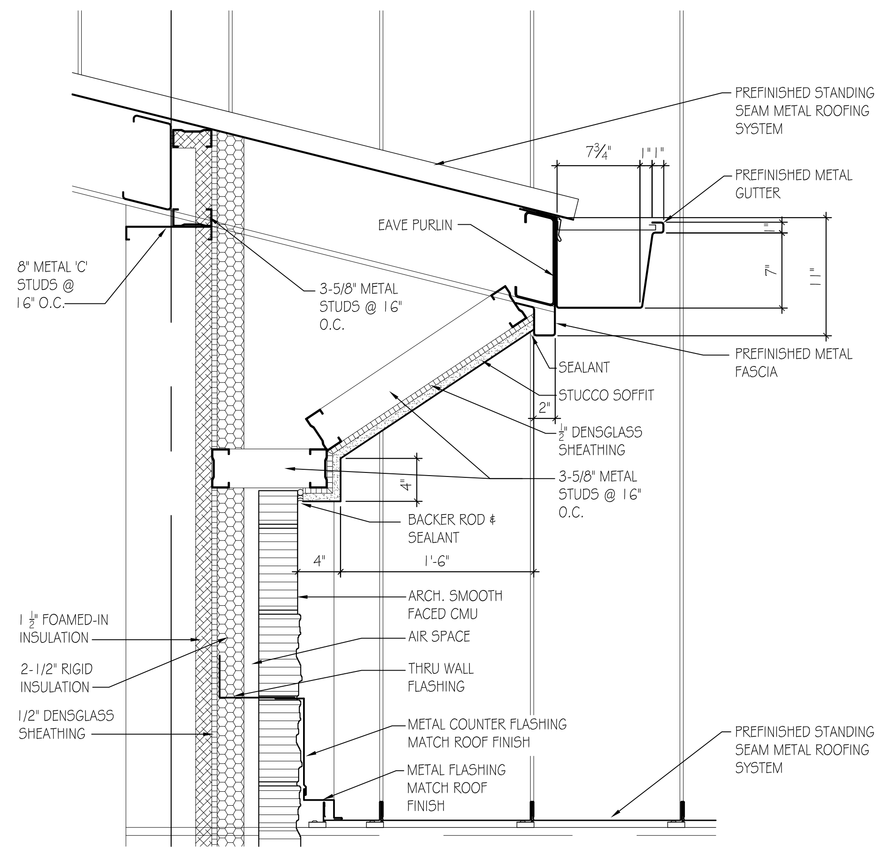

6 A103 **WALL TO ROOF FLASHING DETAIL**
SCALE: 1 1/2" = 1'-0"
0" 4" 9" 2'
2" 6" 12"

NOTE:
ALL VENT STACKS AND VENT STACK FLASHING SHALL BE PAINTED TO MATCH COLOR OR METAL ROOF PANELS.

NOTE:
LOCATE ALL VTR'S (VENT THRU ROOF) IN CENTER OF ROOF PANELS

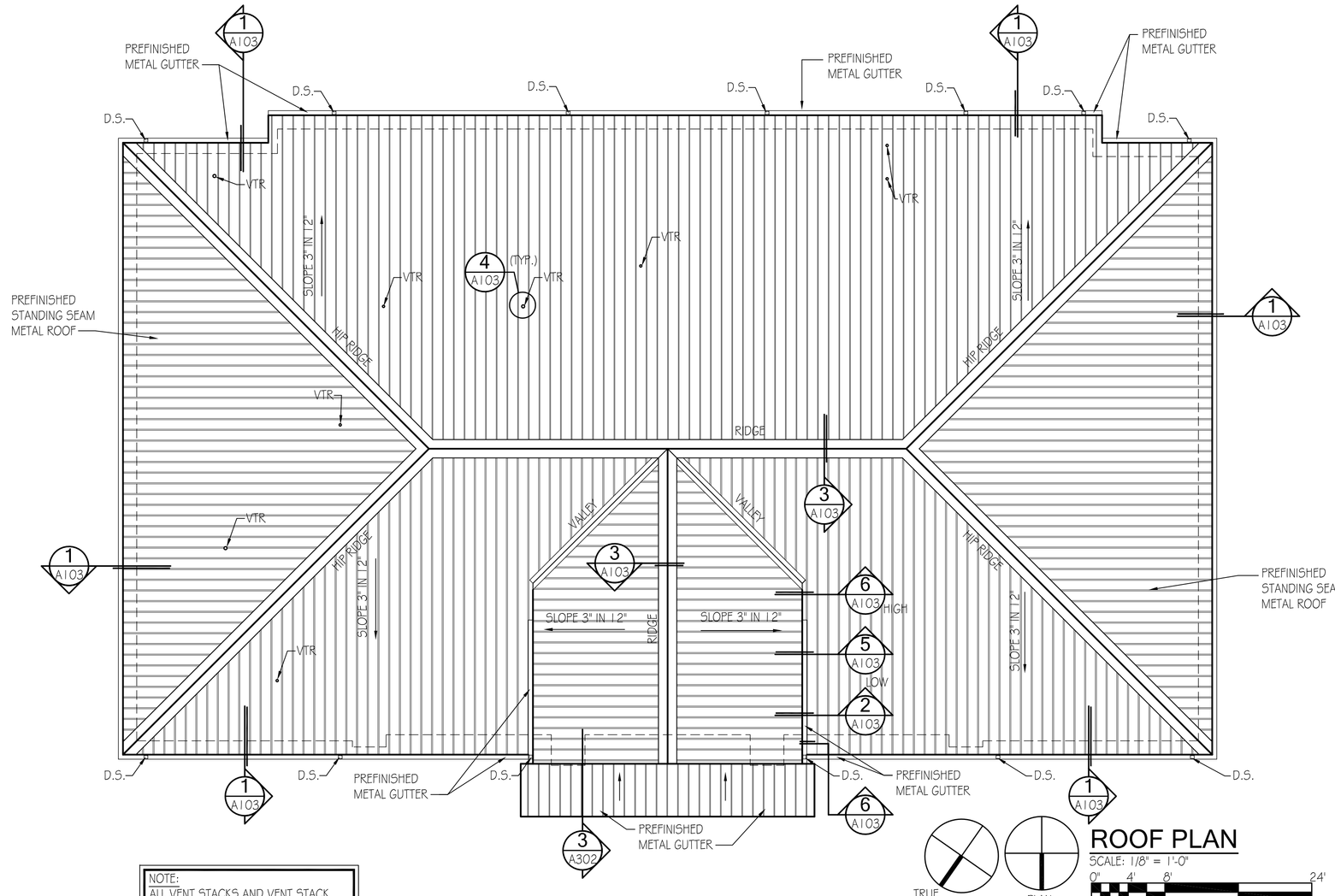

ROOF PLAN
SCALE: 1/8" = 1'-0"
0" 4" 8" 24'
2" 6" 16"

TRUE NORTH
PLAN NORTH

AAFES Real Estate Directorate
AAFES (RE-C) P.O.BOX 660320 DALLAS, TX 75266-0320

KEY PLAN:

DATE	REVISION NO. & DESCRIPTION	BY

STATE OF ALABAMA · MONTGOMERY · EDWARD M. BRUMMAL · REGISTERED ARCHITECT · ALABAMA

PARSONS WIBLE BRUMMAL ALKIRE / ARCHITECTS INC.
MONTGOMERY, ALABAMA

DESIGN BY:
CHECKED BY: EMB
RECOMMENDED: DATE
APPROVED: DATE

ARMY & AIR FORCE EXCHANGE SERVICE
DEPARTMENTS OF THE ARMY & AIR FORCE

RE-C
REAL ESTATE DIRECTORATE

PROJECT:
TYNDALL AFB
CONSTRUCT SHOPPETTE/ FOOD/CLASS 6/GAS

TYNDALL AFB, FLORIDA

DRAWING TITLE:
ROOF PLAN & DETAILS

DATE:	SCALE:	SHEET:
18 JAN. 2012	1/4" = 1'-0"	A103

DRAWING PROJECT NO.
0941-09-000003

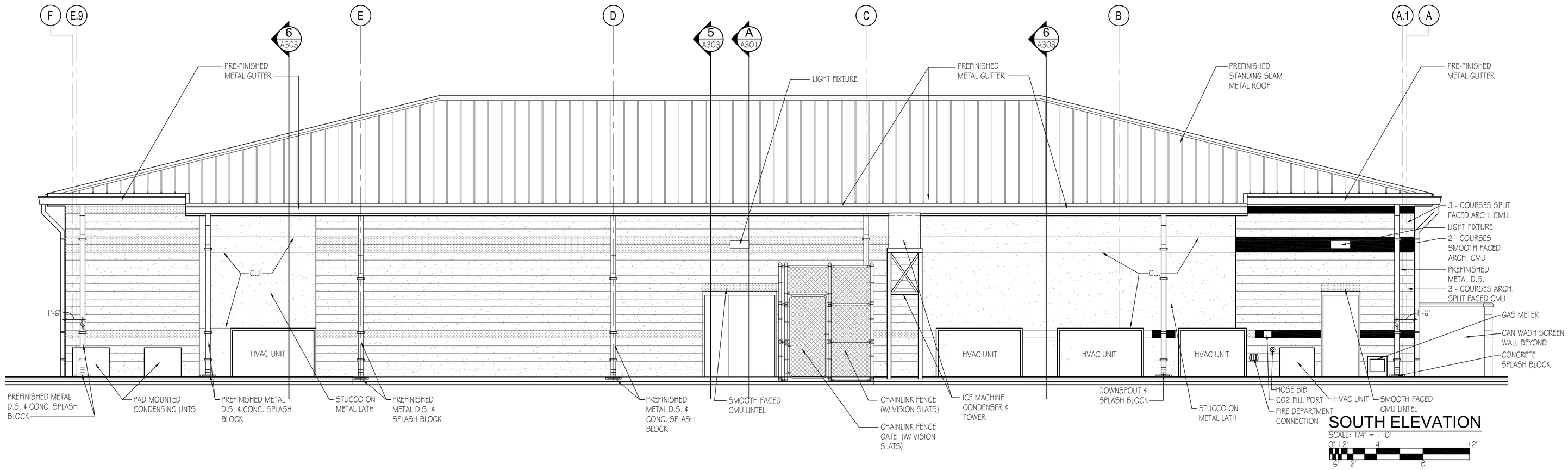

SOUTH ELEVATION

SCALE: 1/4" = 1'-0"

0' 1' 2' 4' 2'

6" 2' 8'

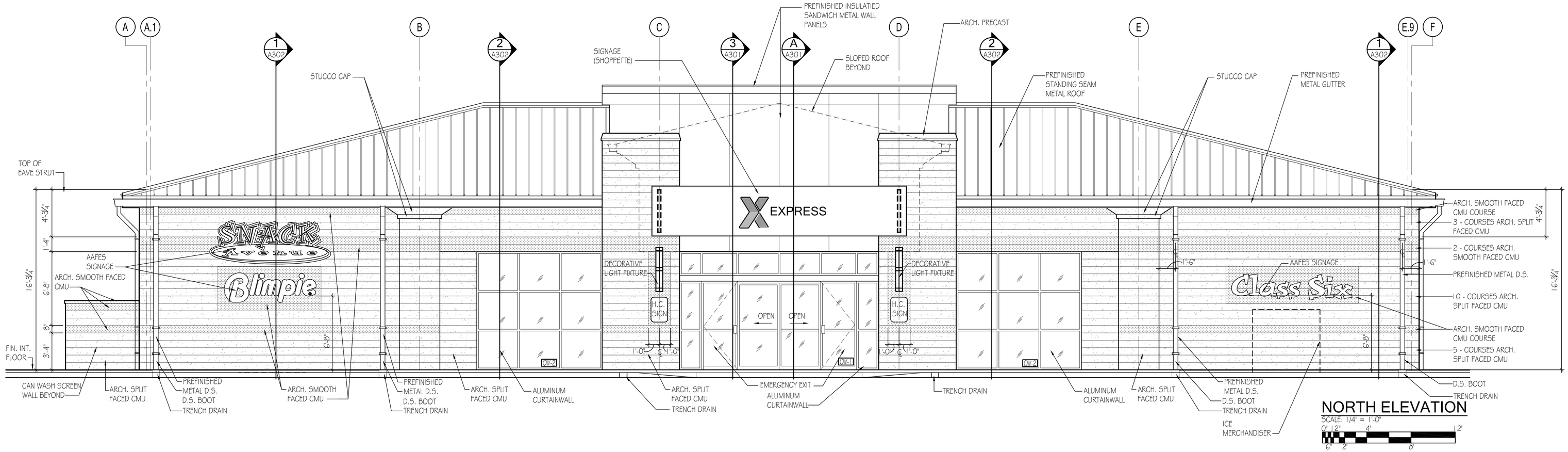

NORTH ELEVATION

SCALE: 1/4" = 1'-0"

0' 1' 2' 4' 2'

6" 2' 8'

AAFES
Real Estate Directorate

AAFES (RE-C) P.O.BOX 660320 DALLAS, TX 75266-0320

KEY PLAN:

DATE	REVISION NO. & DESCRIPTION	BY

STATE OF ALABAMA · MONTGOMERY · EDWARD BRUMMAL ALKIRE · REGISTERED ARCHITECT · ALABAMA

PARSONS WIBLE BRUMMAL ALKIRE / ARCHITECTS INC.
MONTGOMERY, ALABAMA

DESIGN BY:

CHECKED BY:
EMB

RECOMMENDED: DATE

APPROVED: DATE

ARMY & AIR FORCE EXCHANGE SERVICE
DEPARTMENTS OF THE ARMY & AIR FORCE

RE-C
REAL ESTATE DIRECTORATE

PROJECT:
TYNDALL AFB
CONSTRUCT SHOPPETTE/ FOOD/CLASS 6/GAS

TYNDALL AFB, FLORIDA

DRAWING TITLE:
EXTERIOR ELEVATIONS

DATE:	SCALE:	SHEET:
18 JAN. 2012	1/4" = 1'-0"	A201

DRAWING PROJECT NO.
0941-09-000003

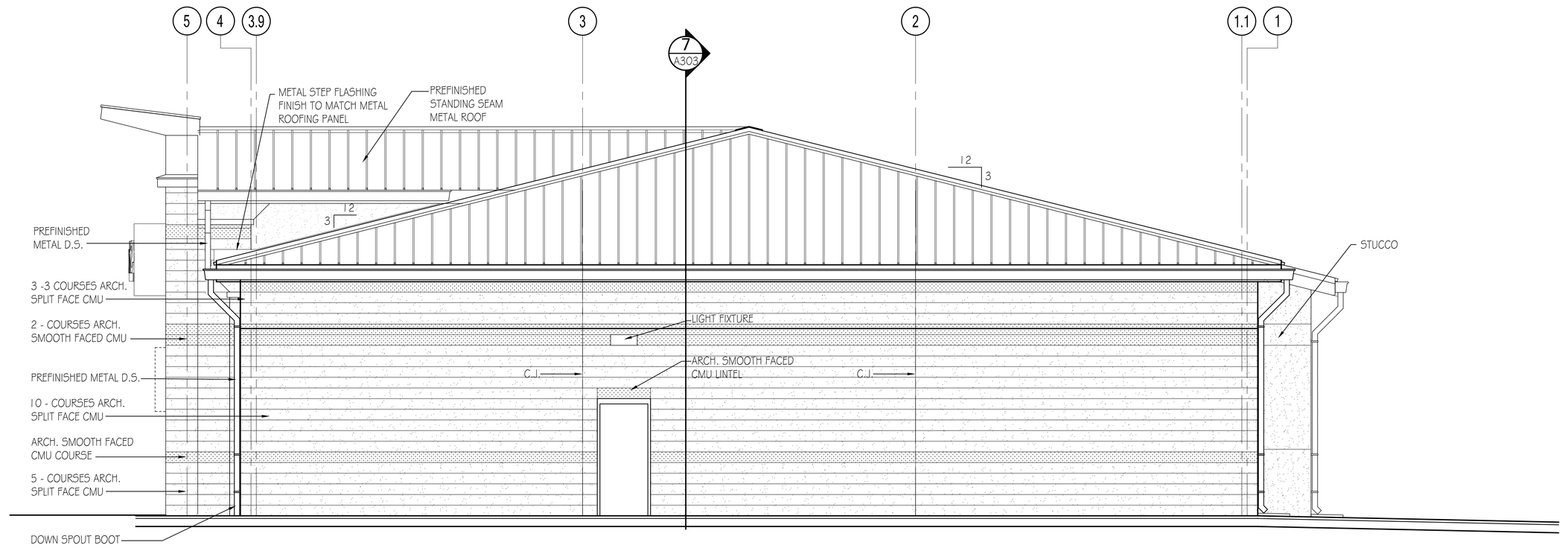

WEST ELEVATION

SCALE: 1/4" = 1'-0"

0" 1' 2' 4' 6' 8'

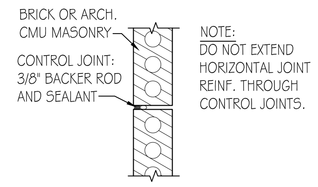

VERTICAL CONTROL JOINT
AT CONTINUOUS WALLS

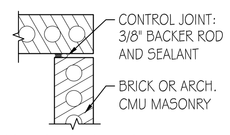

CONTROL JOINT AT INSIDE
CORNER (TYPICAL)

MASONRY CONTROL JOINTS

SCALE: 1 1/2" = 1'-0"

0" 4" 9" 2' 2' 6' 12'

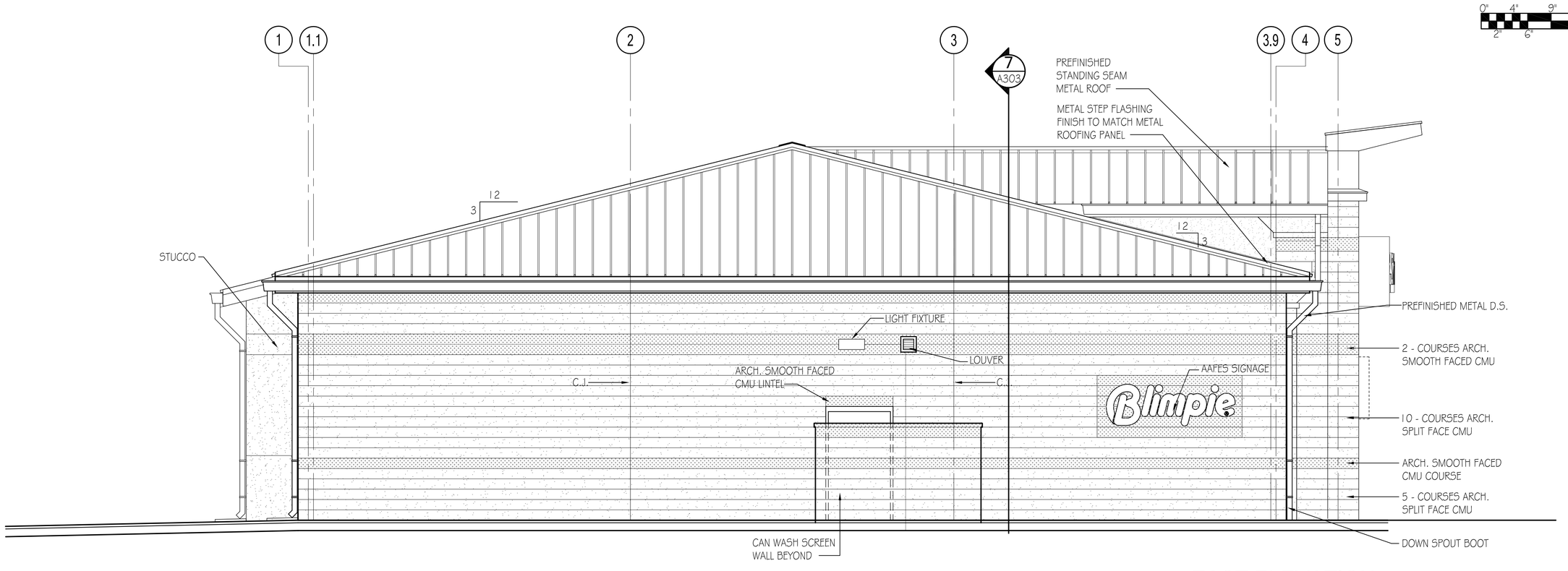

EAST ELEVATION

SCALE: 1/4" = 1'-0"

0" 1' 2' 4' 6' 2' 8'

AAFES
Real Estate Directorate
AAFES (RE-C) P.O.BOX 660320 DALLAS, TX 75266-0320

KEY PLAN:

DATE	REVISION NO. & DESCRIPTION	BY

STATE OF ALABAMA · MONTGOMERY · EDWARD M. BRUMMAL · REGISTERED ARCHITECT · ALABAMA

PARSONS WIBLE BRUMMAL ALKIRE / ARCHITECTS INC.
MONTGOMERY, ALABAMA

DESIGN BY:

CHECKED BY: EMB

RECOMMENDED: DATE

APPROVED: DATE

ARMY & AIR FORCE EXCHANGE SERVICE
DEPARTMENTS OF THE ARMY & AIR FORCE

RE-C
REAL ESTATE DIRECTORATE

PROJECT:
TYNDALL AFB
CONSTRUCT SHOPPETTE/
FOOD/CLASS 6/GAS

TYNDALL AFB,
FLORIDA

DRAWING TITLE:
EXTERIOR ELEVATIONS

DATE:	SCALE:	SHEET:
18 JAN. 2012	1/4" = 1'-0"	A202

DRAWING PROJECT NO.
0941-09-000003

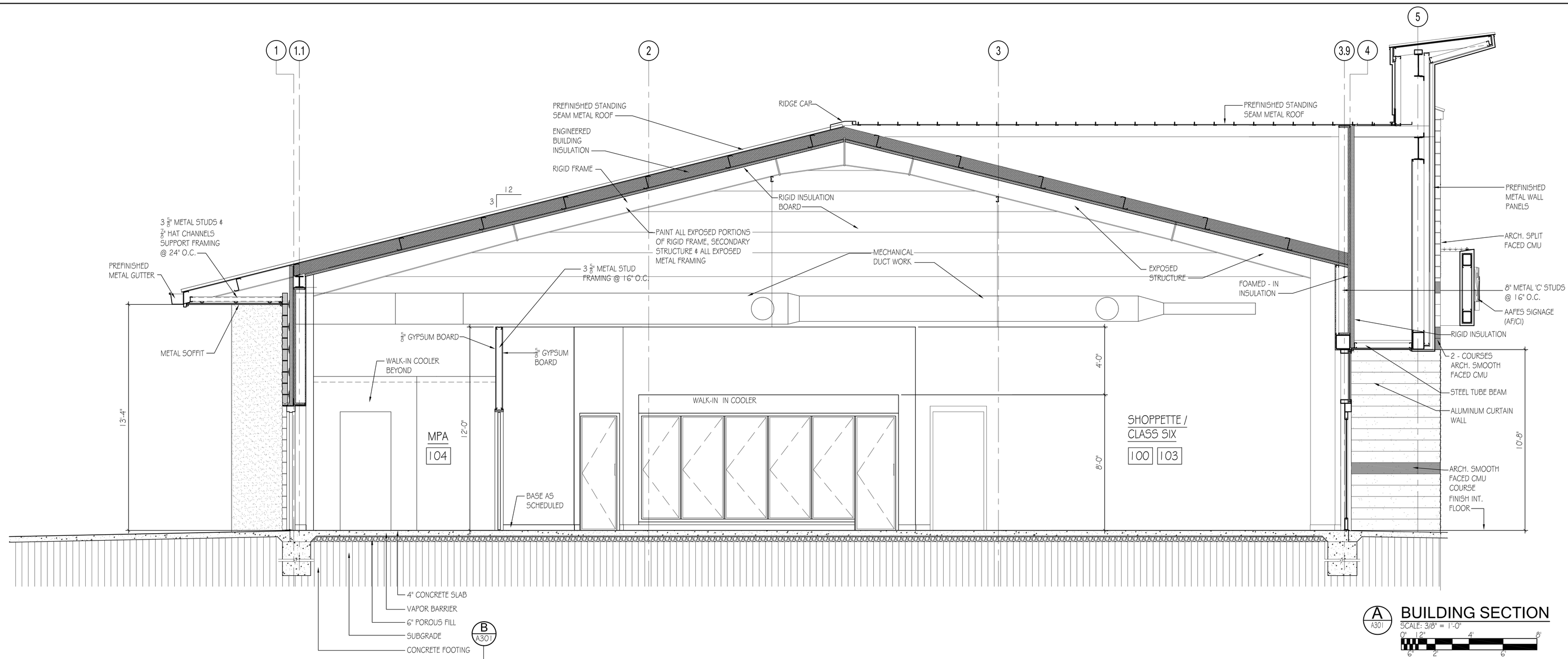

A A301 **BUILDING SECTION**
SCALE: 3/8" = 1'-0"
0" 12" 4' 8'
6" 2' 6'

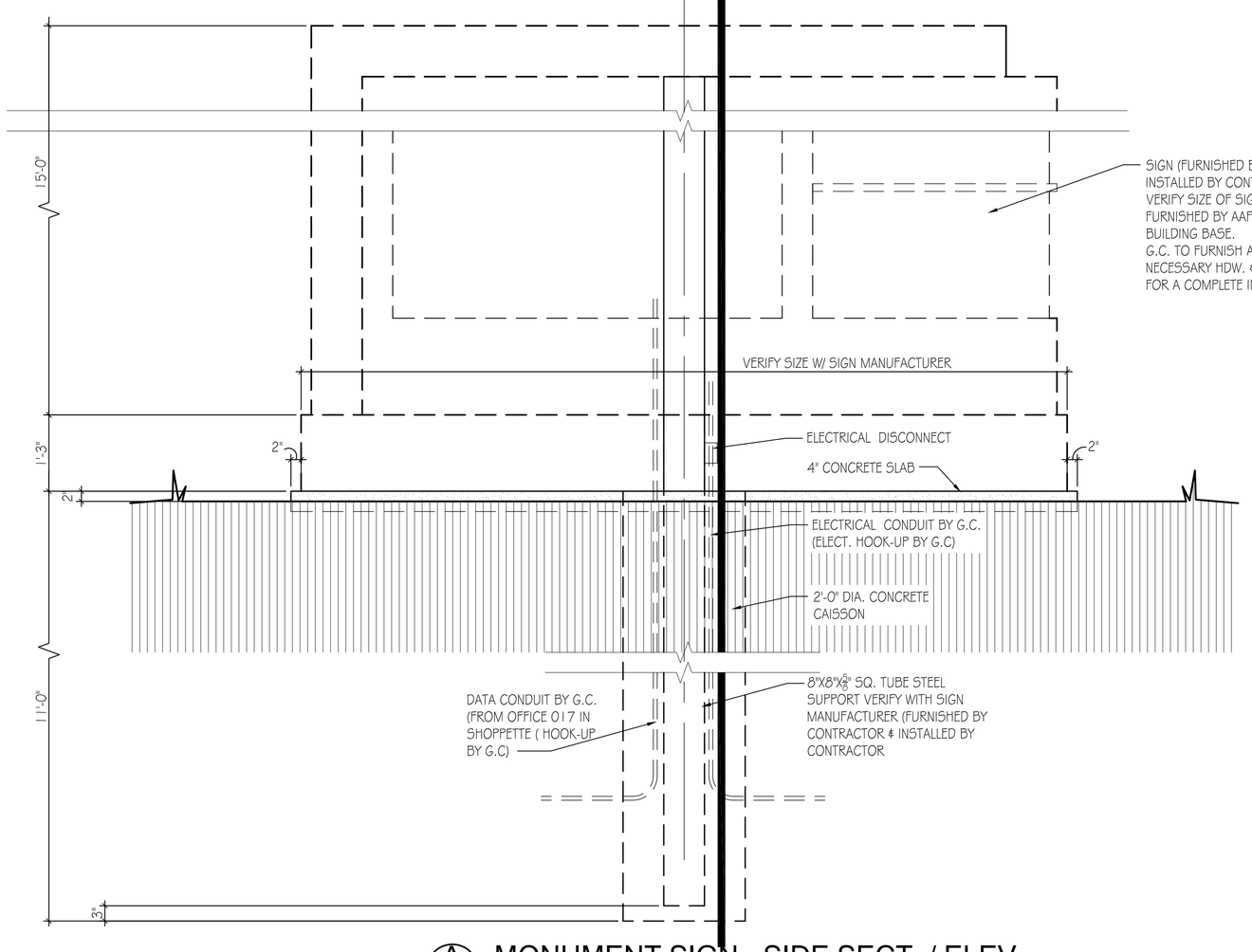

A A301 **MONUMENT SIGN - SIDE SECT. / ELEV.**
SCALE: 3/4"= 1'-0"
SEE SITE PLANS FOR LOCATION

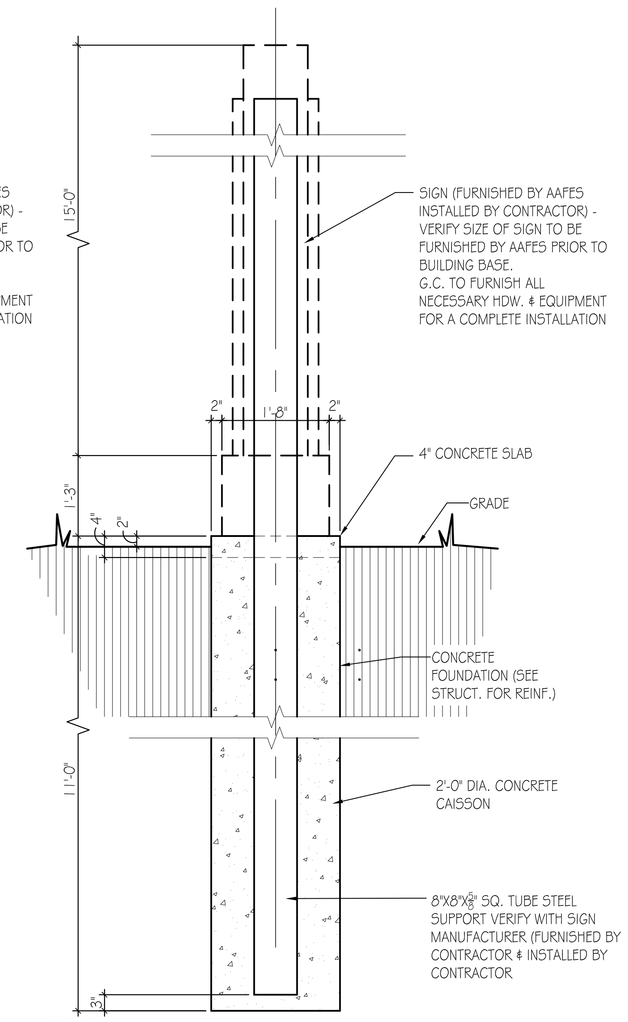

B A301 **MONUMENT SIGN - SECTION**
SCALE: 3/4"= 1'-0"

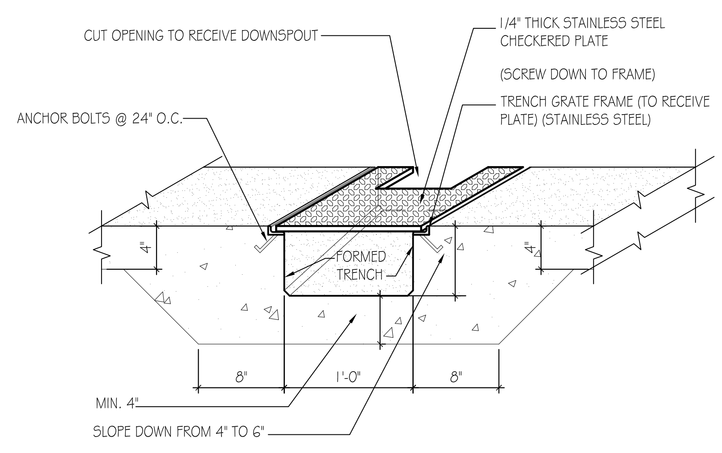

D A301 **TRENCH GRATE DETAIL**
SCALE: 1 1/2" = 1'-0"
0" 4" 9" 2'
6" 6" 12"

AAFES Real Estate Directorate
AAFES (RE-C) P.O.BOX 660320 DALLAS, TX 75266-0320

KEY PLAN:

DATE	REVISION NO. & DESCRIPTION	BY

STATE OF ALABAMA MONTGOMERY EDWARD BRUMMAL ALKIRE REGISTERED ARCHITECT

PARSONS WIBLE BRUMMAL ALKIRE / ARCHITECTS INC.
MONTGOMERY, ALABAMA

DESIGN BY:
CHECKED BY: EMB
RECOMMENDED: DATE
APPROVED: DATE

ARMY & AIR FORCE EXCHANGE SERVICE
DEPARTMENTS OF THE ARMY & AIR FORCE

RE-C
REAL ESTATE DIRECTORATE

PROJECT:
TYNDALL AFB
CONSTRUCT SHOPPETTE/ FOOD/CLASS 6/GAS

TYNDALL AFB, FLORIDA

DRAWING TITLE:
BUILDING SECTION & DETAILS

DATE:	SCALE:	SHEET:
18 JAN. 2012	AS NOTED	A301

DRAWING PROJECT NO.
0941-09-000003

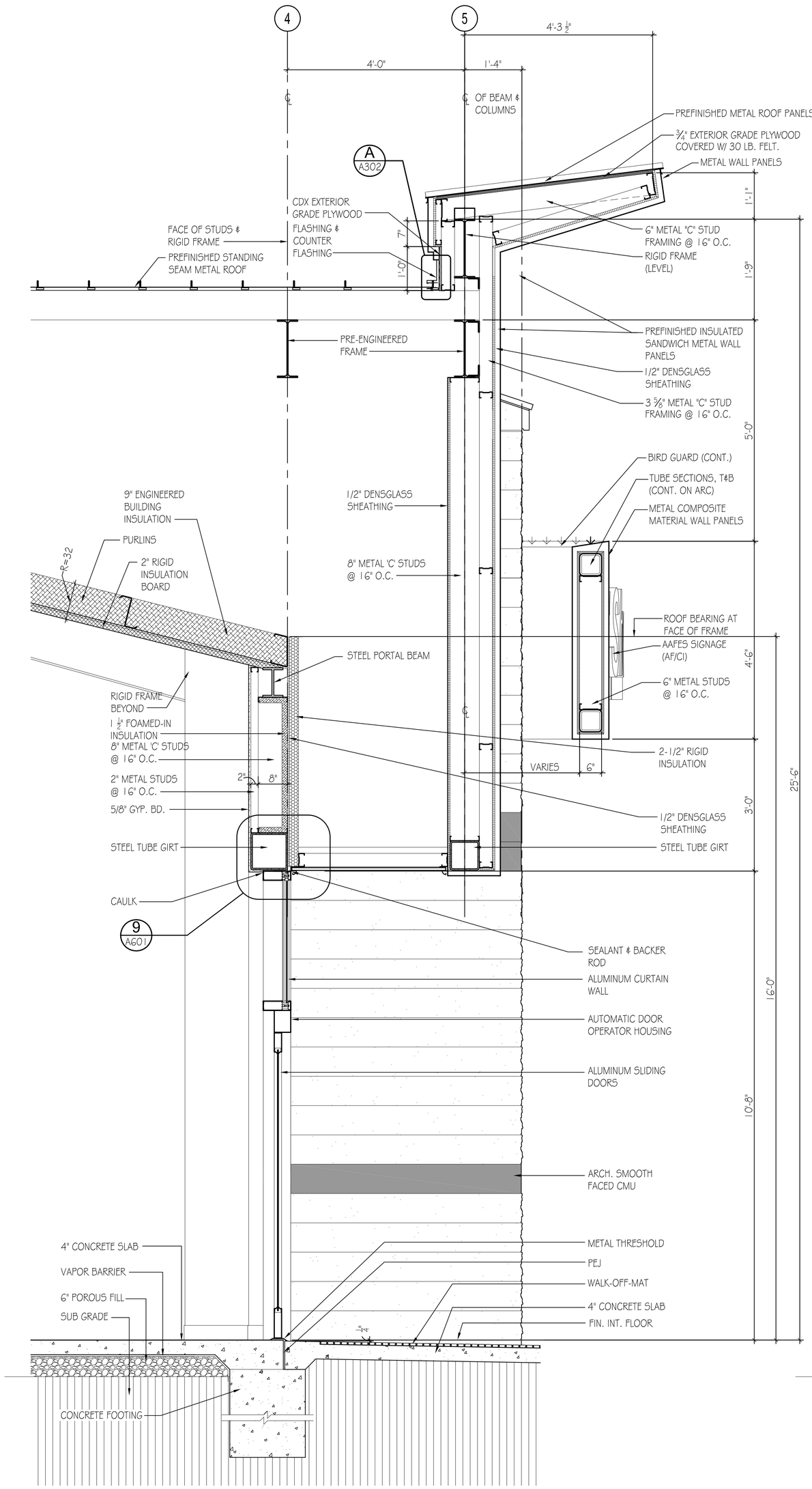

3 WALL SECTION
A302 — SCALE: 3/4" = 1'-0"

0" 4" 9" 2' 4'
2" 6" 12" 3'

GENERAL

NOTE :
GYP. BD. AT INSIDE FACE OF EXTERIOR WALLS SHALL BE GLASS-MAT-FACED GYPSUM BD.

GENERAL

NOTE :
TO ACHIEVE A FULL VAPOR BARRIER CONDITION AT EXTERIOR WALLS ALL SEAMS IN RIGID FOAM INSULATION (SHEATHING) SHALL BE TAPED

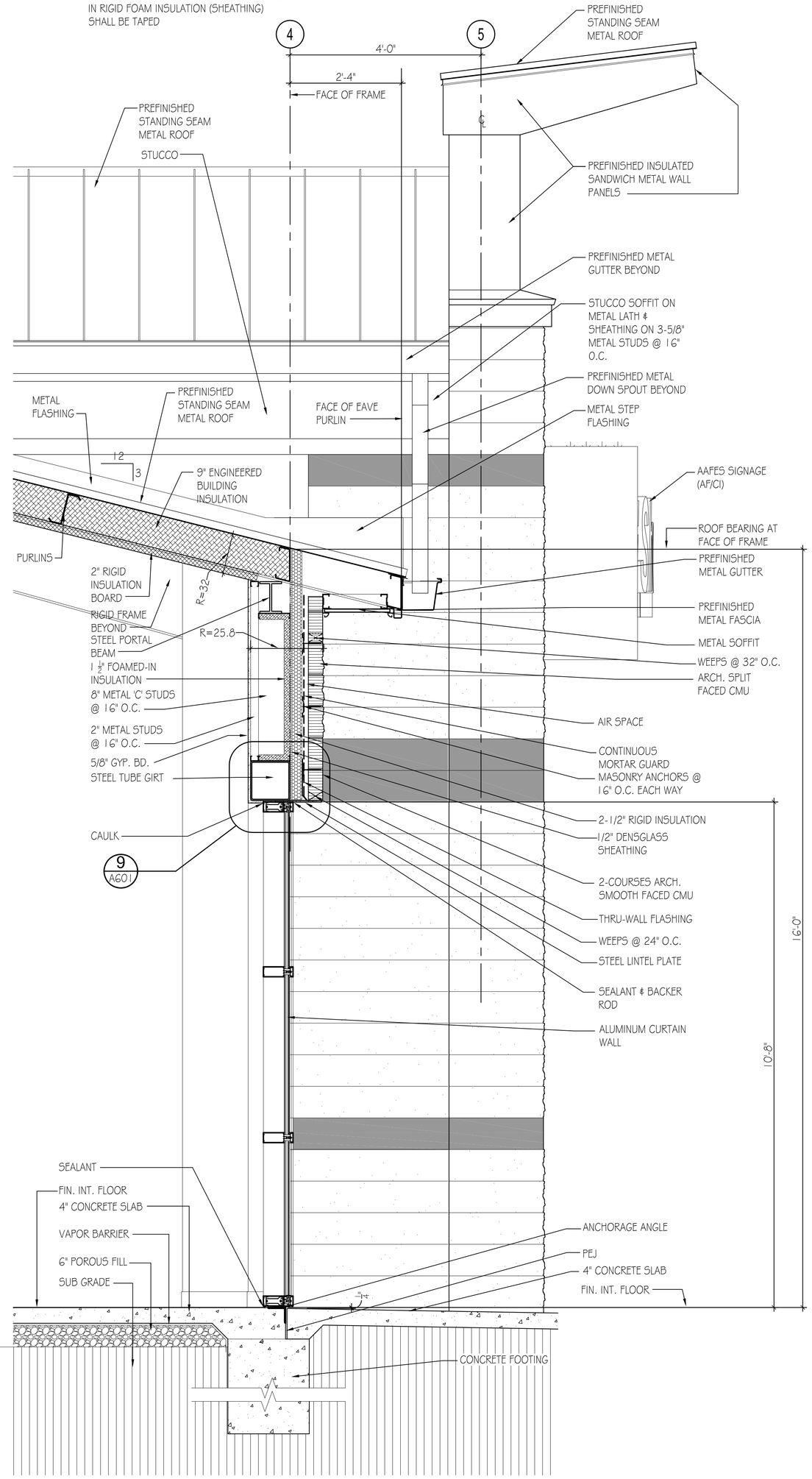

2 WALL SECTION
A302 — SCALE: 3/4" = 1'-0"

0" 4" 9" 2' 4'
2" 6" 12" 3'

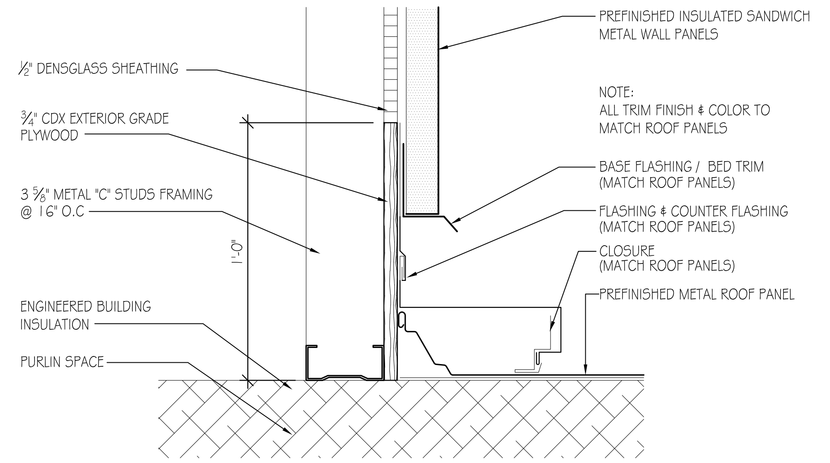

A FLASHING DETAIL
A302 — SCALE: 3" = 1'-0"

0" 1" 3" 6" 12"
1/2" 2" 4" 9"

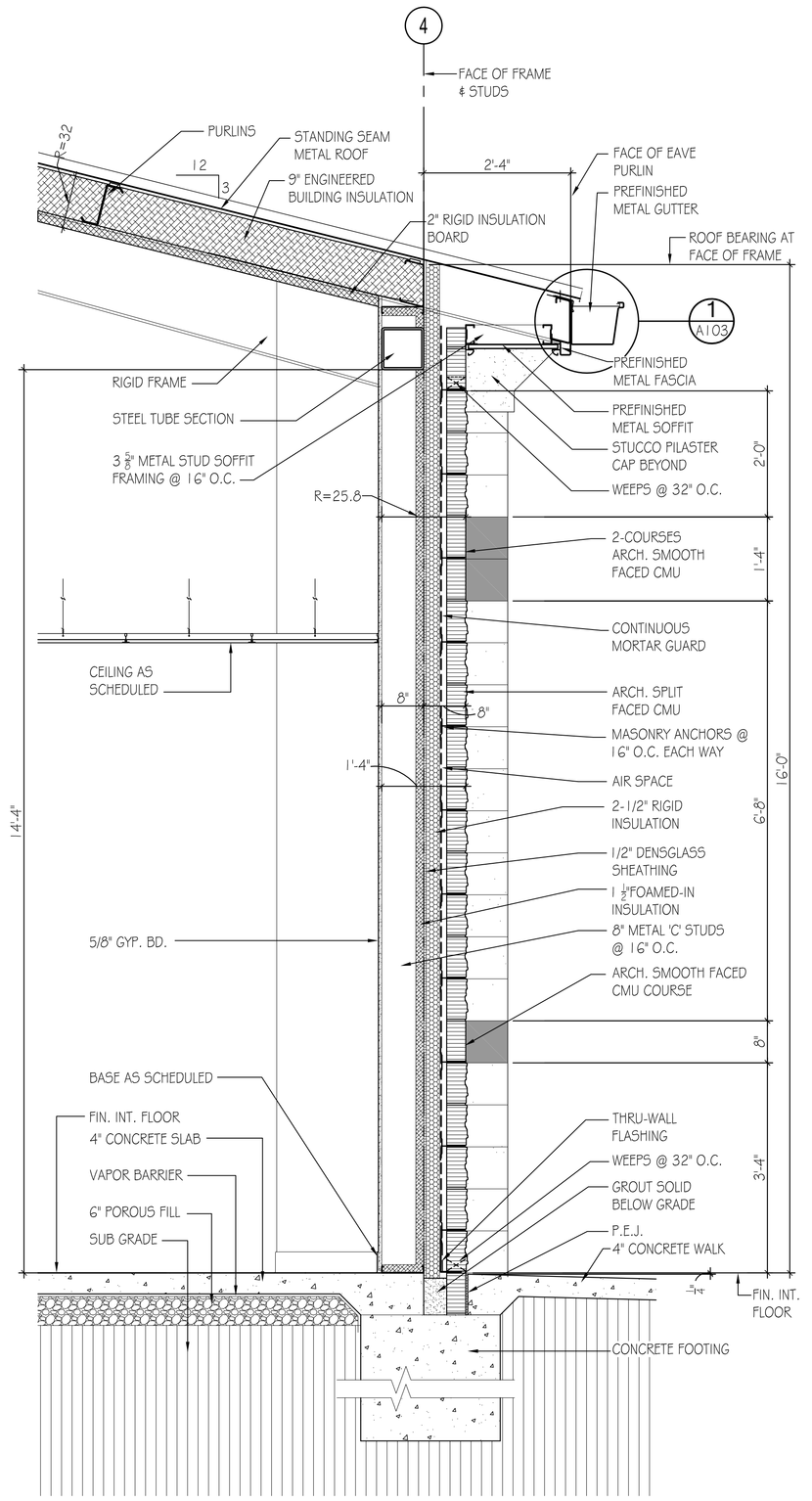

1 WALL SECTION
A302 — SCALE: 3/4" = 1'-0"

0" 4" 9" 2' 4'
2" 6" 12" 3'

AAFES
Real Estate Directorate
AAFES (RE-C) P.O.BOX 660320 DALLAS, TX 75266-0320

KEY PLAN:

DATE	REVISION NO. & DESCRIPTION	BY

STATE OF ALABAMA · MONTGOMERY · EDWARD BRUMMAL · ALABAMA REGISTERED ARCHITECT

PARSONS WIBLE BRUMMAL ALKIRE / ARCHITECTS INC.
MONTGOMERY, ALABAMA

DESIGN BY: LSB
CHECKED BY: EMB

RECOMMENDED: DATE
APPROVED: DATE

ARMY & AIR FORCE EXCHANGE SERVICE
DEPARTMENTS OF THE ARMY & AIR FORCE

RE-C
REAL ESTATE DIRECTORATE

PROJECT:
TYNDALL AFB
CONSTRUCT SHOPPETTE/ FOOD/CLASS 6/GAS

TYNDALL AFB, FLORIDA

DRAWING TITLE:
WALL SECTIONS

DATE:	SCALE:	SHEET:
18 JAN. 2012	AS NOTED	A302

DRAWING PROJECT NO.
0941-09-000003

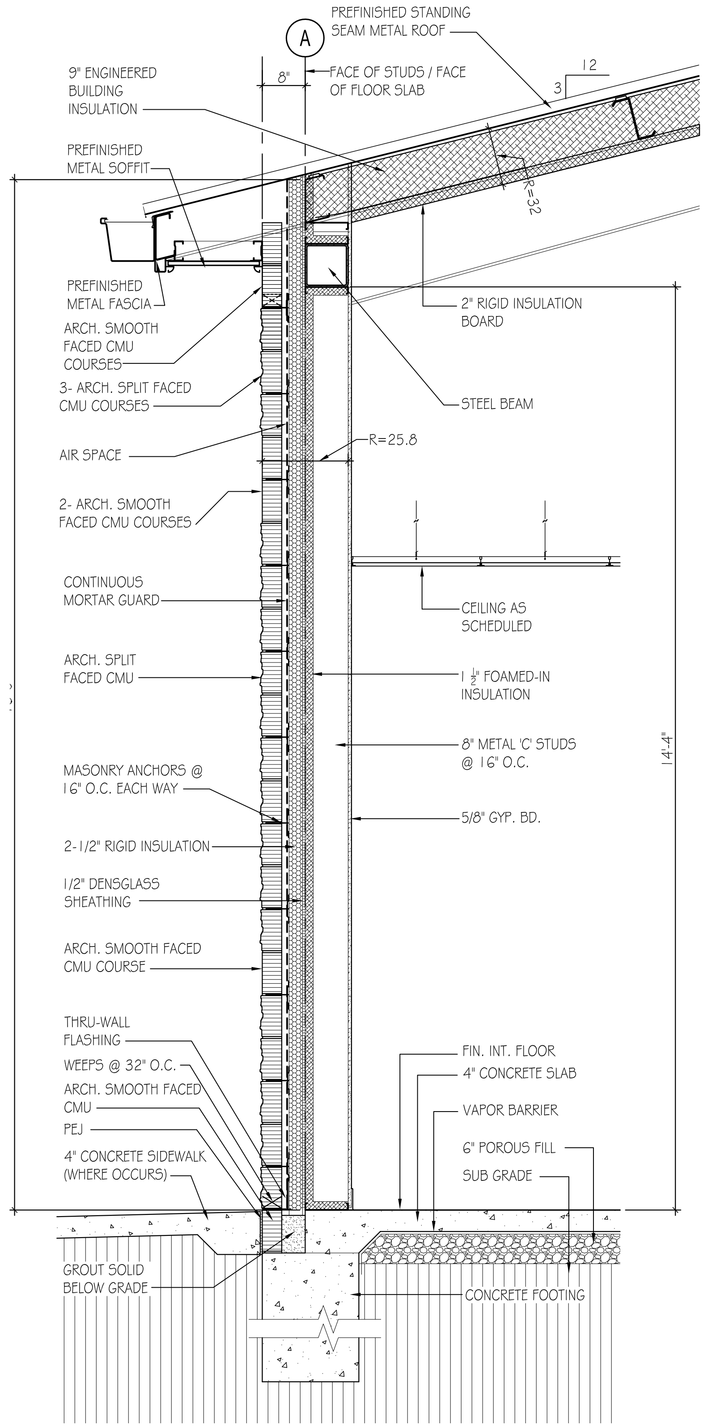

7 A303 WALL SECTION

SCALE: 3/4" = 1'-0"

0" 4" 9" 2' 4'

2" 6" 12" 3'

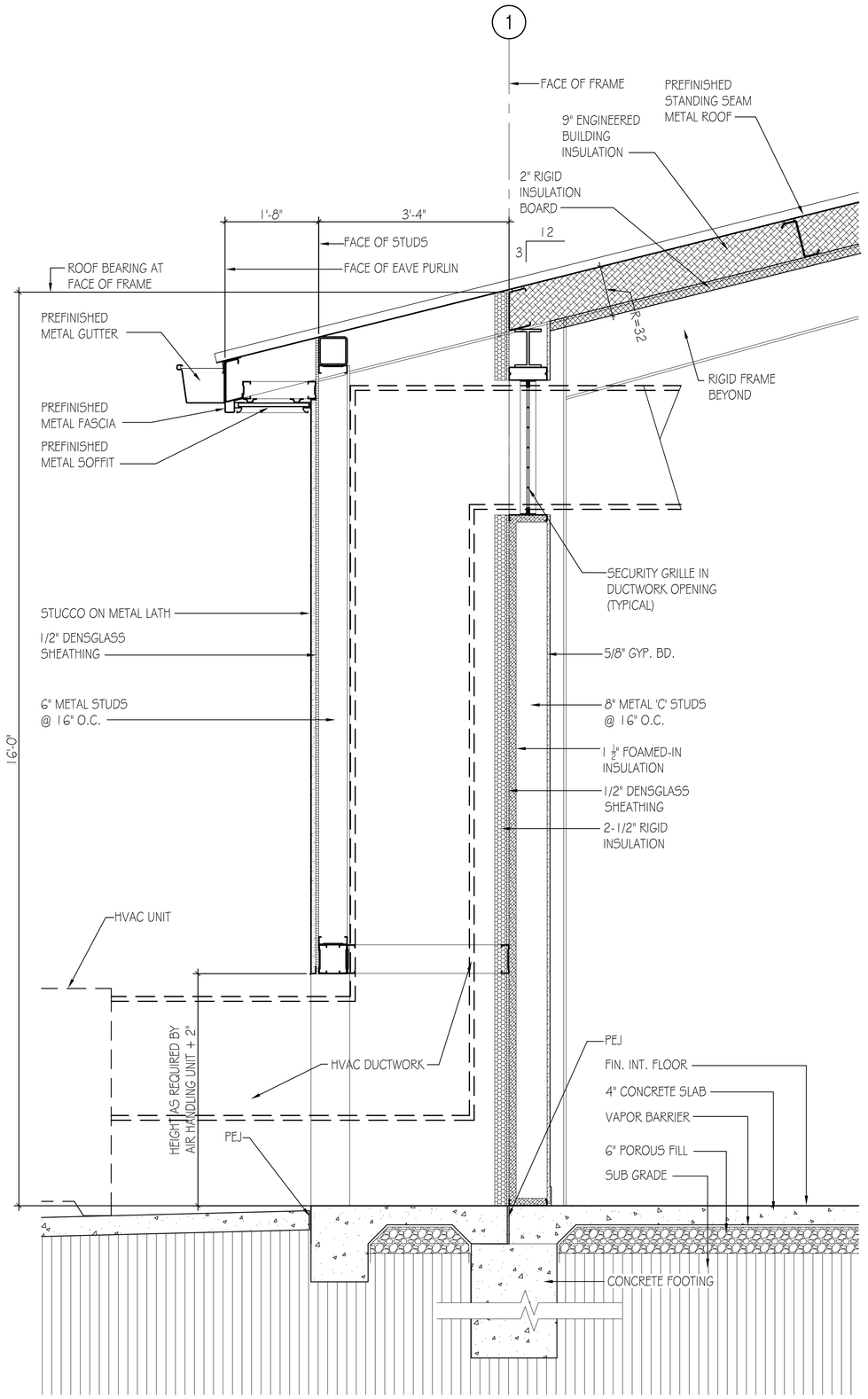

6 A303 WALL SECTION

SCALE: 3/4" = 1'-0"

0" 4" 9" 2' 4'

2" 6" 12" 3'

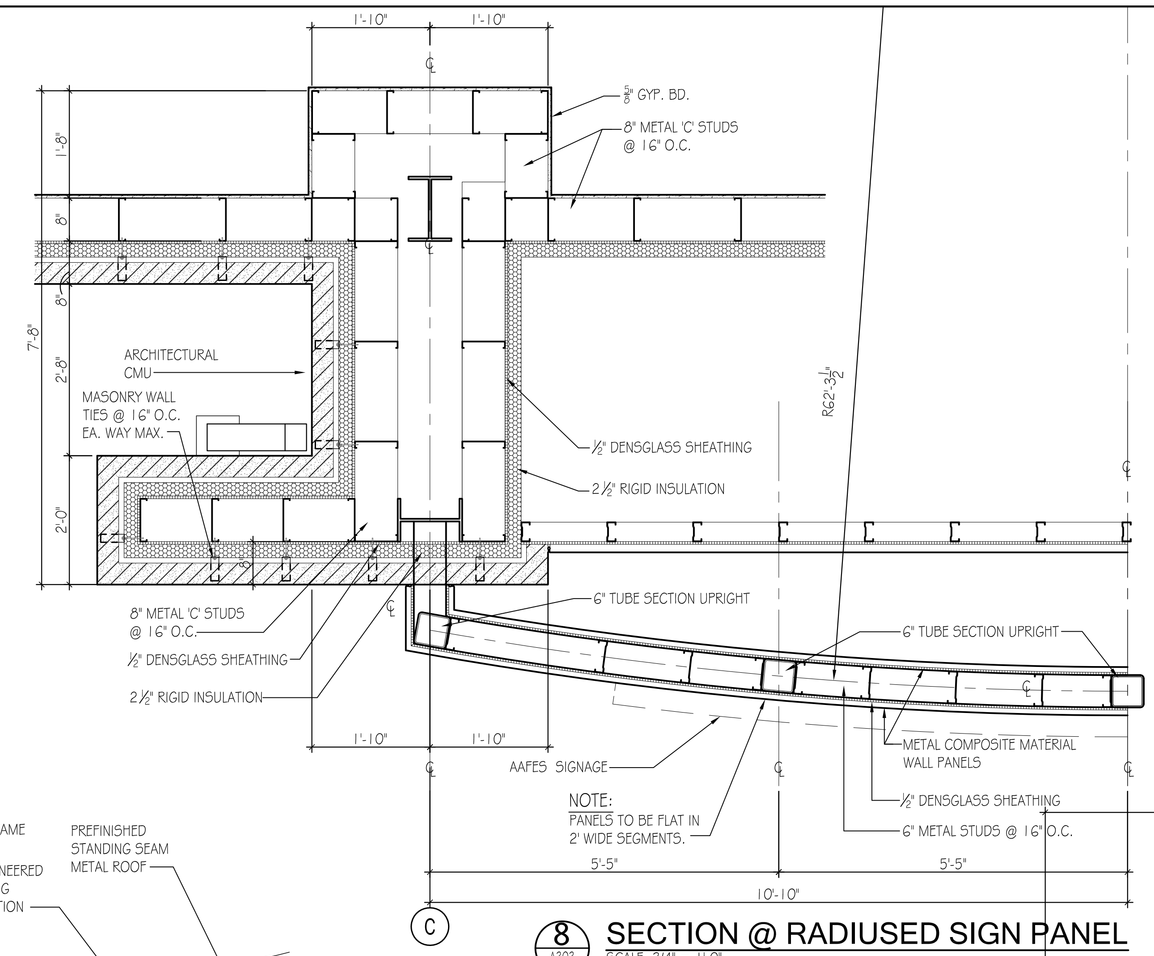

8 A303 SECTION @ RADIUSED SIGN PANEL

SCALE: 3/4" = 1'-0"

0" 4" 9" 2' 4'

2" 6" 12" 3'

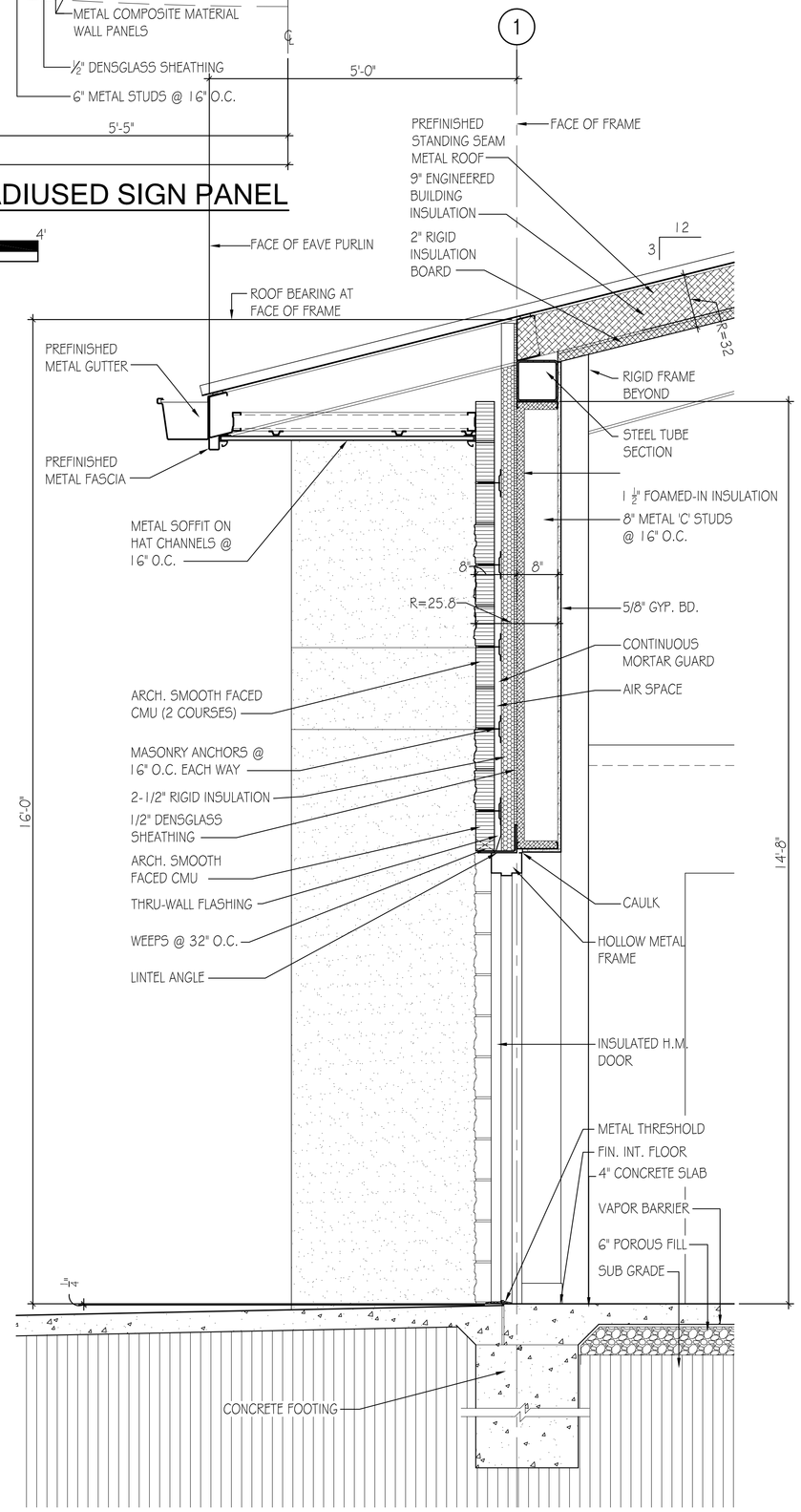

4 A303 WALL SECTION

SCALE: 3/4" = 1'-0"

0" 4" 9" 2' 4'

2" 6" 12" 3'

AAFES
Real Estate Directorate
AAFES (RE-C) P.O.BOX 660320 DALLAS, TX 75266-0320

KEY PLAN:

DATE	REVISION NO. & DESCRIPTION	BY

STATE OF ALABAMA · MONTGOMERY · EDWARD BRUMMAL ALKIRE · REGISTERED ARCHITECT

PARSONS WIBLE BRUMMAL ALKIRE / ARCHITECTS INC.
MONTGOMERY, ALABAMA

DESIGN BY: LSB

CHECKED BY: EMB

RECOMMENDED: DATE

APPROVED: DATE

ARMY & AIR FORCE EXCHANGE SERVICE
DEPARTMENTS OF THE ARMY & AIR FORCE

RE-C
REAL ESTATE DIRECTORATE

PROJECT:
TYNDALL AFB
CONSTRUCT SHOPPETTE/ FOOD/CLASS 6/GAS

TYNDALL AFB, FLORIDA

DRAWING TITLE:
WALL SECTIONS

DATE:	SCALE:	SHEET:
18 JAN. 2012	1/4" = 1'-0"	A303

DRAWING PROJECT NO.
0941-09-000003

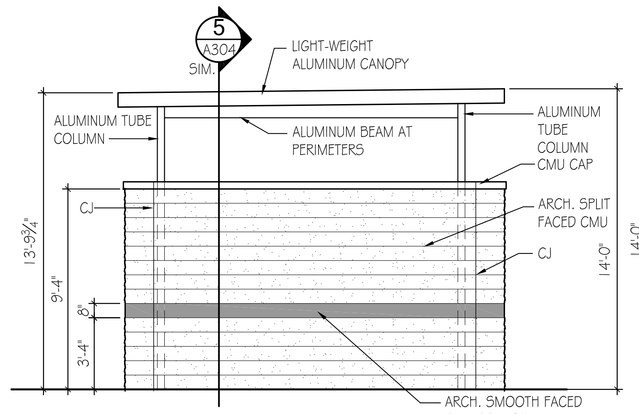

TYPICAL SIDE ELEVATION OF DUMPSTER AREA

SCALE: 1/4" = 1'-0"

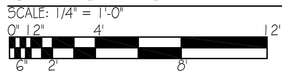

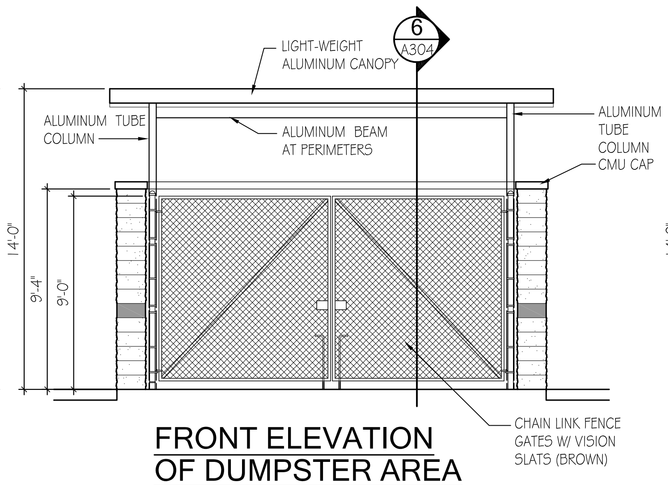

FRONT ELEVATION OF DUMPSTER AREA

SCALE: 1/4" = 1'-0"

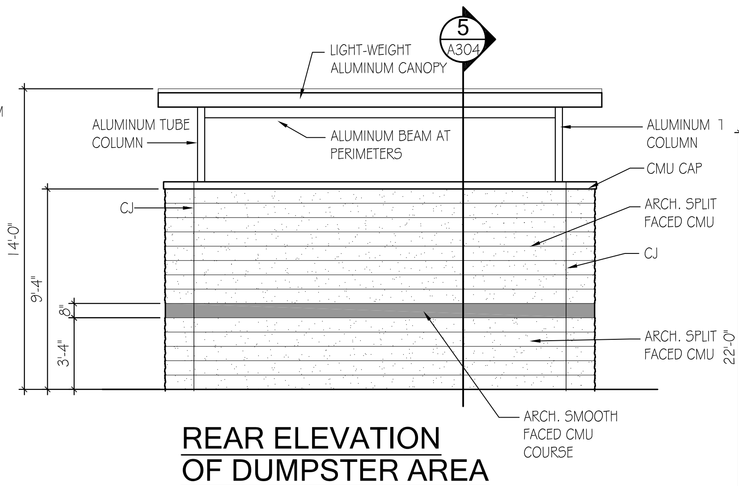

REAR ELEVATION OF DUMPSTER AREA

SCALE: 1/4" = 1'-0"

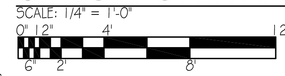

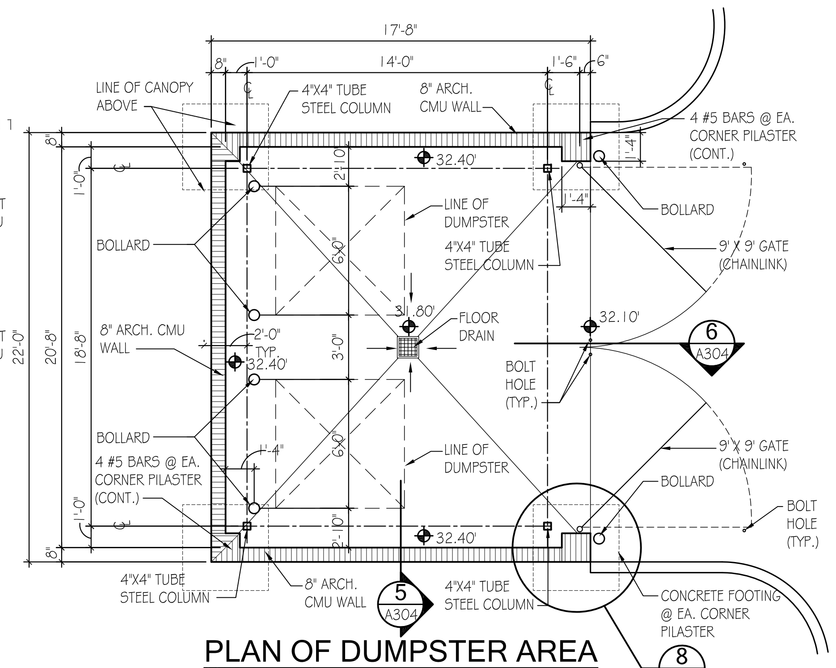

PLAN OF DUMPSTER AREA

SCALE: 1/4" = 1'-0"

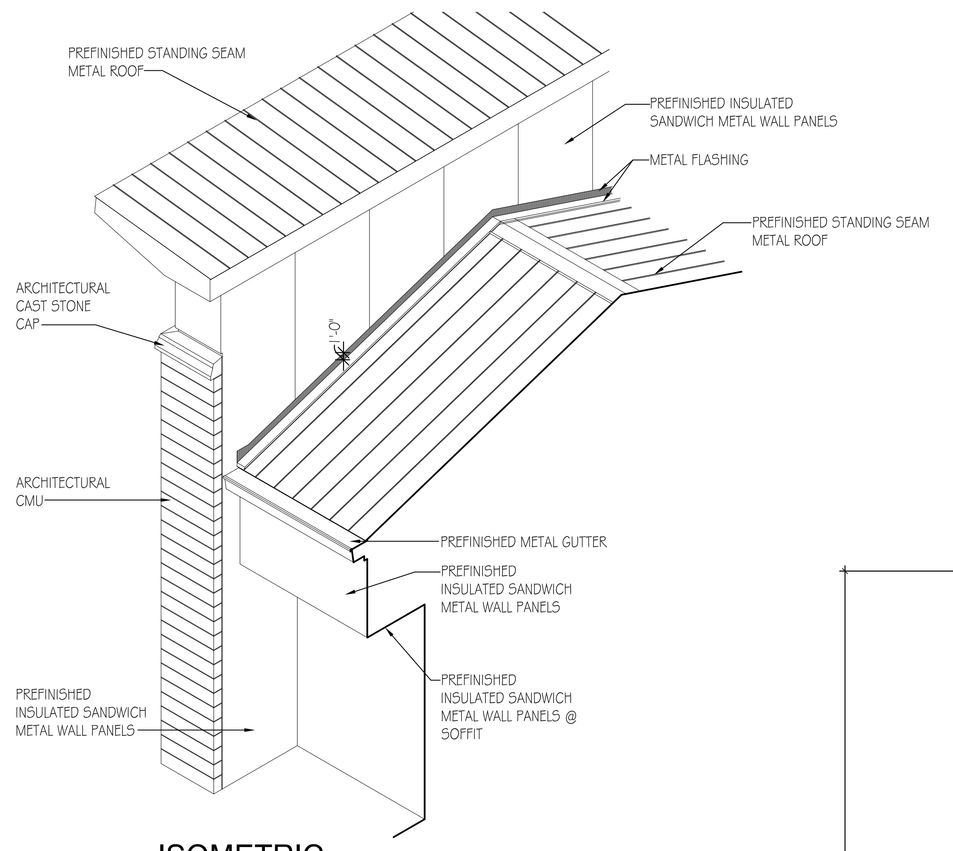

ISOMETRIC @ VESTIBULE 109

SCALE: 1/4" = 1'-0"

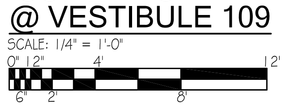

DUMPSTER CANOPY SECTION

6 A304

SCALE: 3/4" = 1'-0"

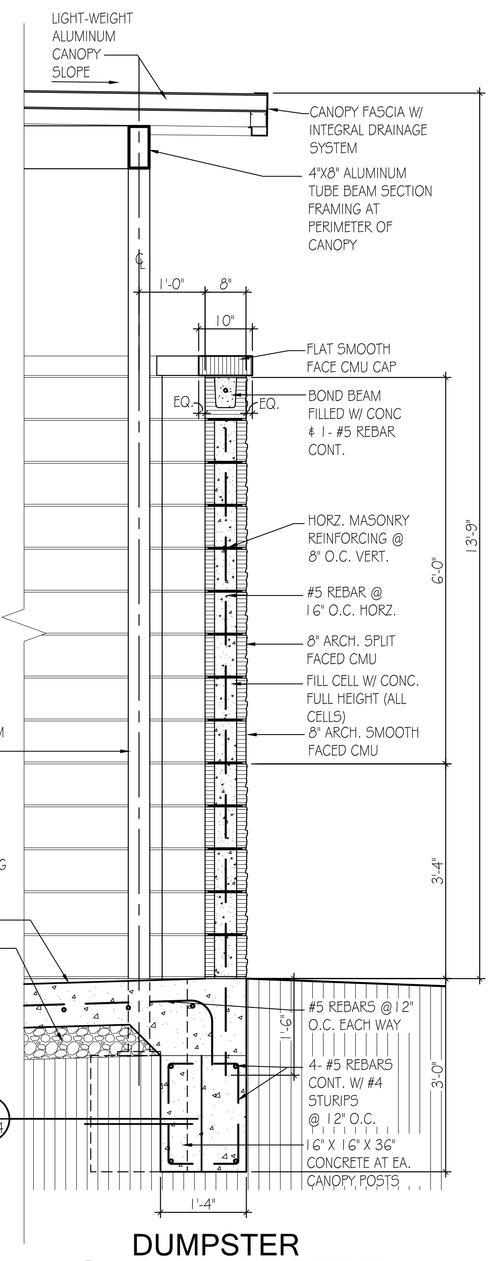

DUMPSTER CANOPY SECTION

5 A304

SCALE: 3/4" = 1'-0"

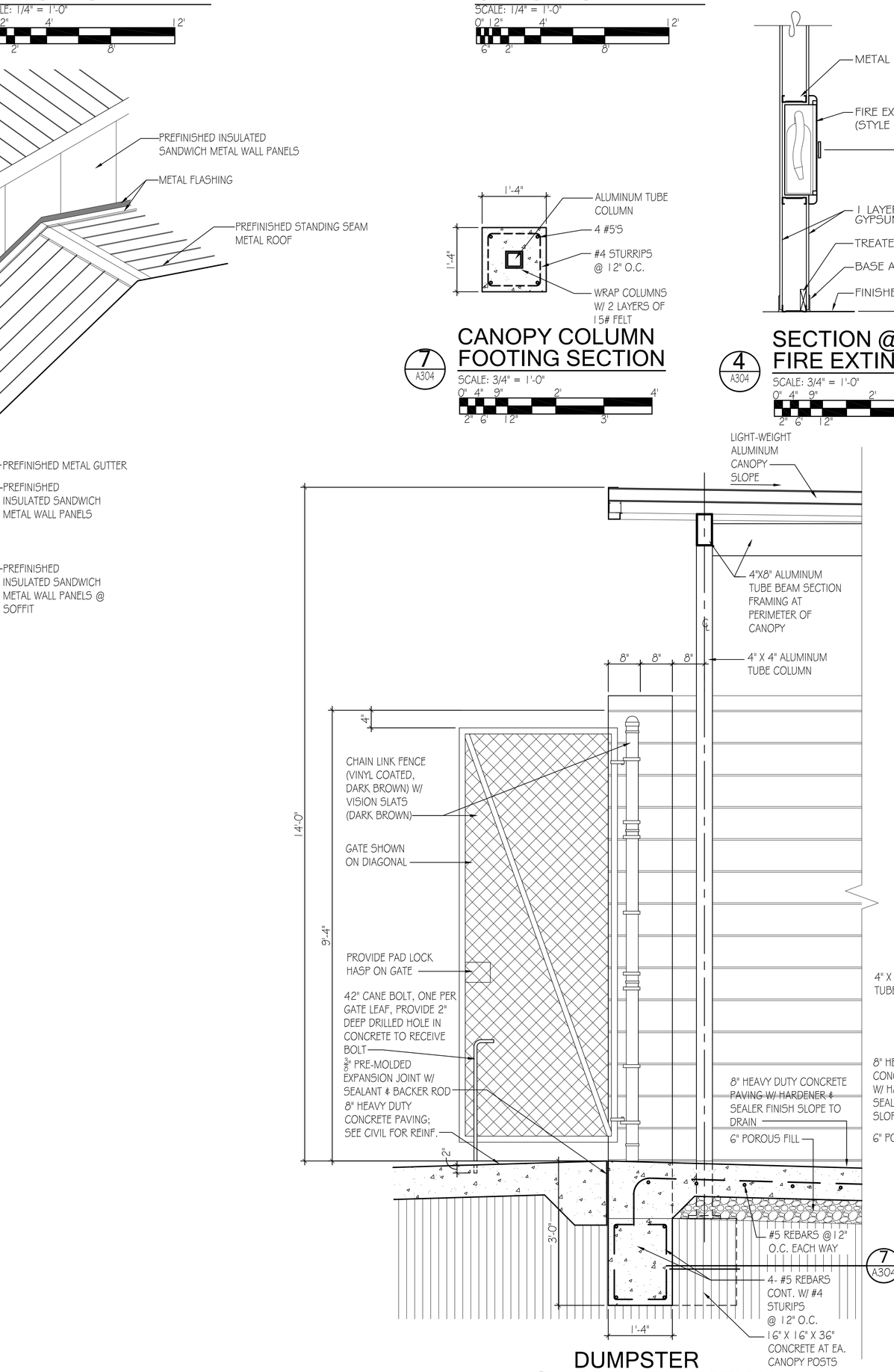

CANOPY COLUMN FOOTING SECTION

7 A304

SCALE: 3/4" = 1'-0"

SECTION @ FIRE EXTINGUISHER CABINET

4 A304

SCALE: 3/4" = 1'-0"

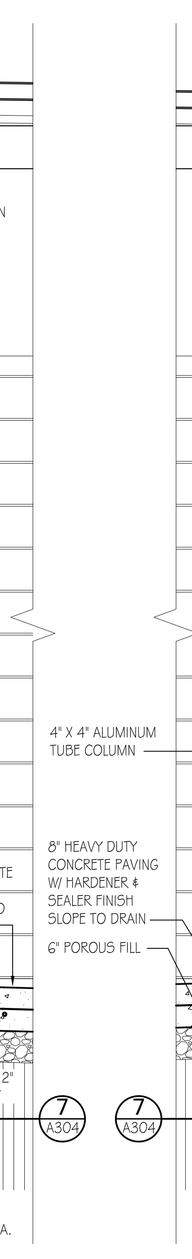

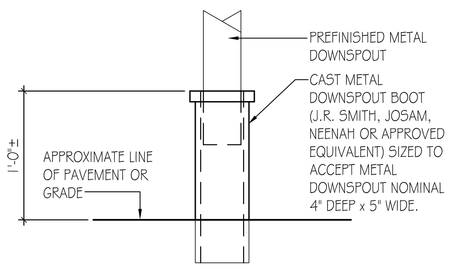

DOWNSPOUT BOOT DETAIL

3 A304

SCALE: 1 1/2" = 1'-0"

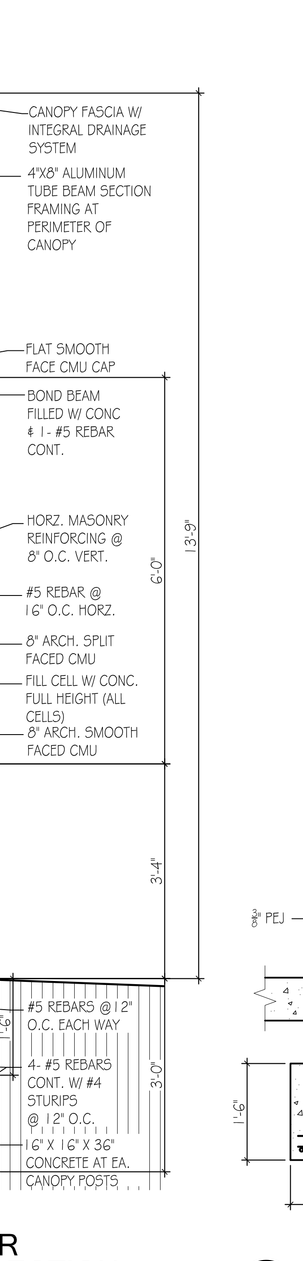

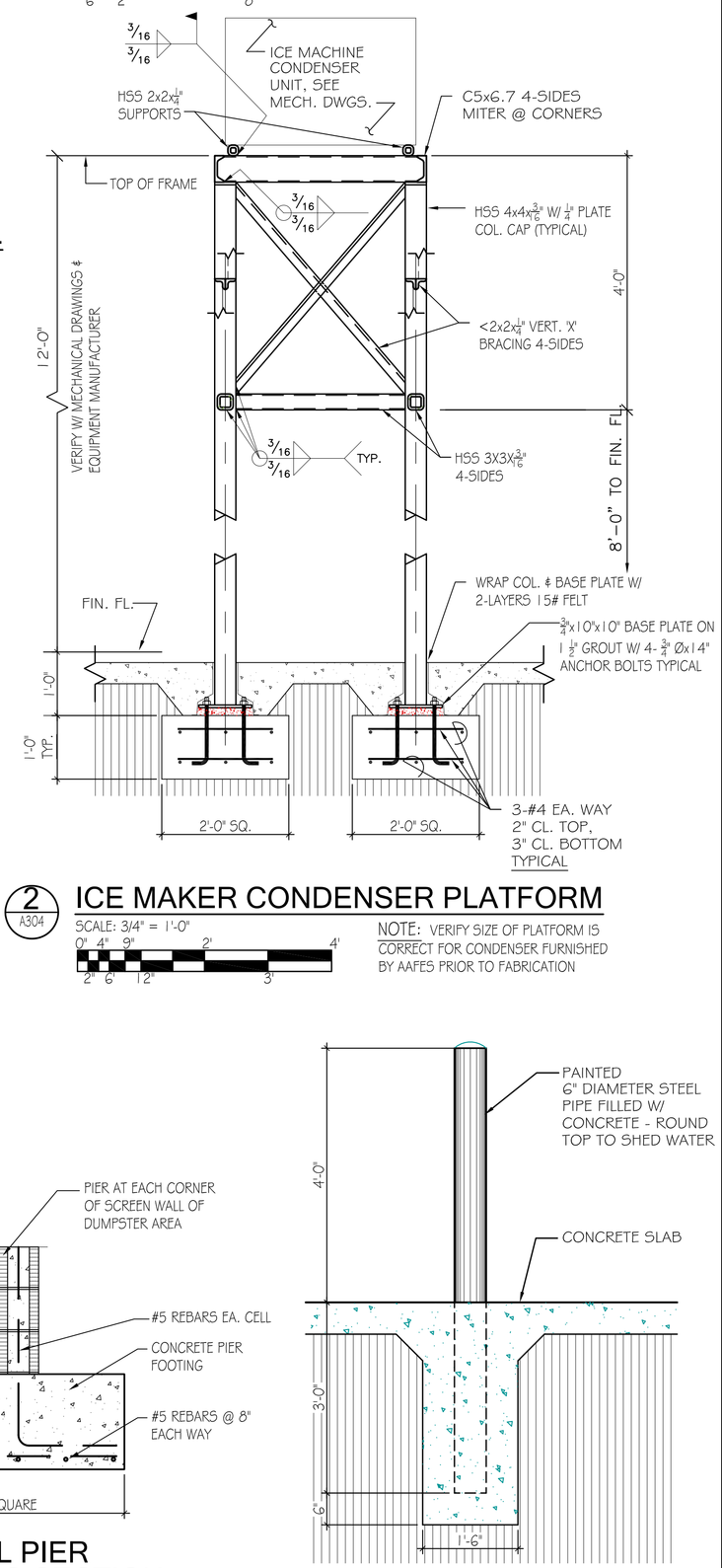

ICE MAKER CONDENSER PLATFORM

2 A304

SCALE: 3/4" = 1'-0"

NOTE: VERIFY SIZE OF PLATFORM IS CORRECT FOR CONDENSER FURNISHED BY AAFES PRIOR TO FABRICATION

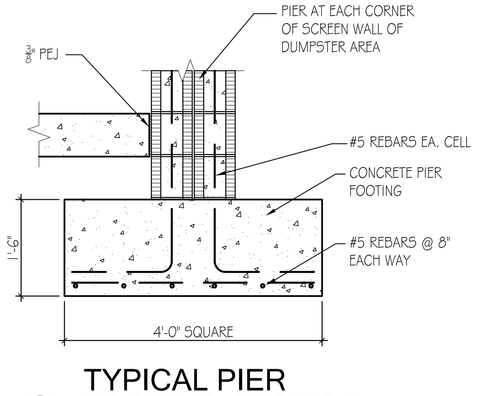

TYPICAL PIER FOOTING SECTION

8 A304

SCALE: 3/4" = 1'-0"

BOLLARD DETAIL

1 A304

SCALE: 3/4" = 1'-0"

AAFES Real Estate Directorate
AAFES (RE-C) P.O.BOX 660320 DALLAS, TX 75266-0320

KEY PLAN:

DATE	REVISION NO. & DESCRIPTION	BY

STATE OF ALABAMA · MONTGOMERY · EDWARD M. BRUMMAL · ALABAMA · REGISTERED ARCHITECT

PARSONS WIBLE BRUMMAL ALKIRE / ARCHITECTS INC.
MONTGOMERY, ALABAMA

DESIGN BY:

CHECKED BY: EMB

RECOMMENDED: DATE

APPROVED: DATE

ARMY & AIR FORCE EXCHANGE SERVICE
DEPARTMENTS OF THE ARMY & AIR FORCE

RE-C
REAL ESTATE DIRECTORATE

PROJECT:
TYNDALL AFB
CONSTRUCT SHOPPETTE/ FOOD/CLASS 6/GAS

TYNDALL AFB, FLORIDA

DRAWING TITLE:
SECTIONS & DETAILS

DATE:	SCALE:	SHEET:
18 JAN. 2012	AS NOTED	A304

DRAWING PROJECT NO.
0941-09-000003

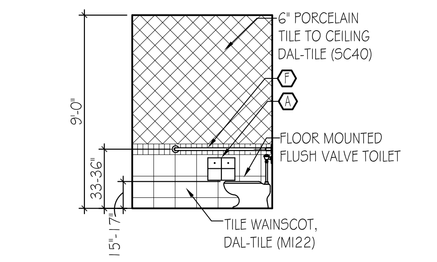

4 A401 TOILET ELEVATION

SCALE: 1/4" = 1'-0"

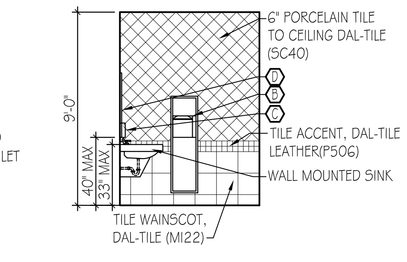

5 A401 TOILET ELEVATION

SCALE: 1/4" = 1'-0"

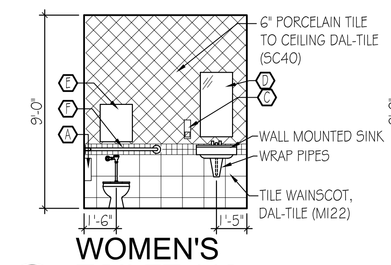

6 A401 WOMEN'S TOILET 110

SCALE: 1/4" = 1'-0"

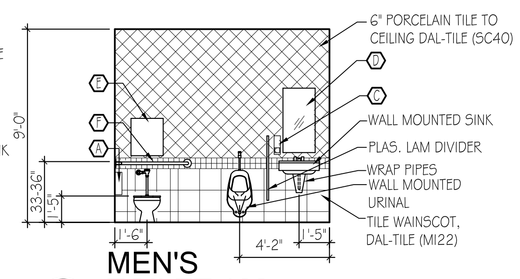

7 A401 MEN'S TOILET 109

SCALE: 1/4" = 1'-0"

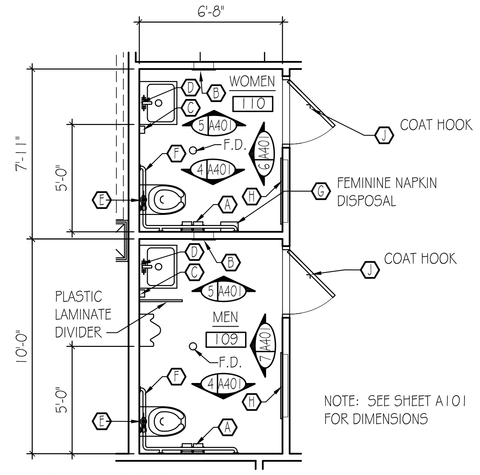

NOTE: SEE SHEET A101 FOR DIMENSIONS

TOILET PLANS
MEN 109, & WOMEN 110

SCALE: 1/4" = 1'-0"

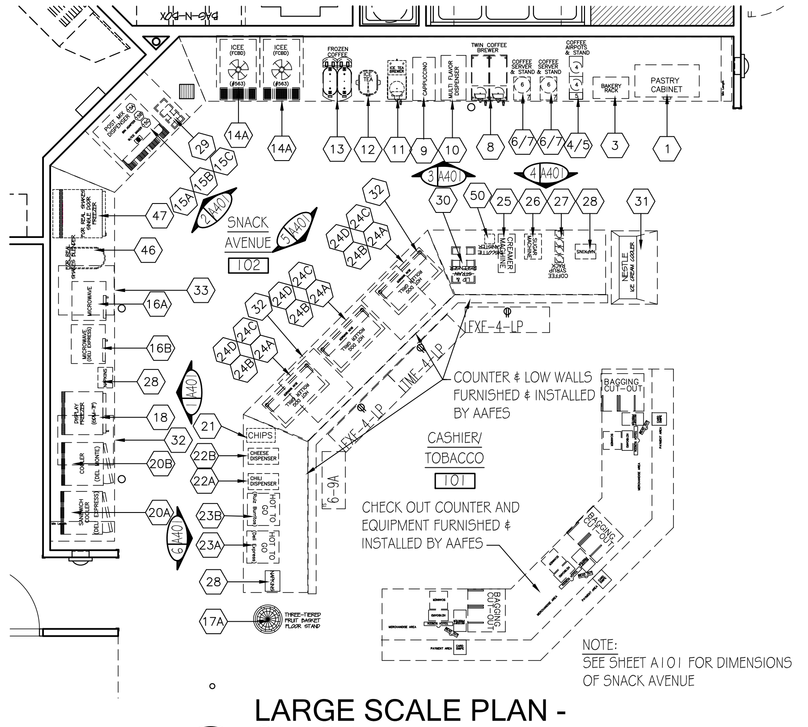

A A401 LARGE SCALE PLAN - SNACK AVENUE

SCALE: 1/4" = 1'-0"

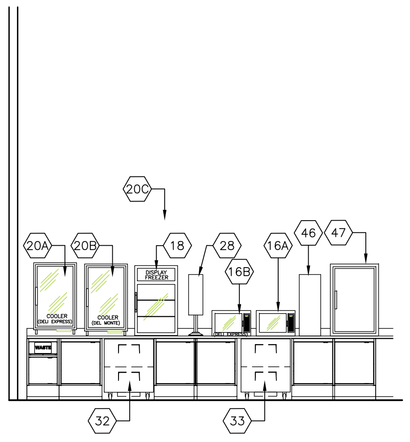

1 A401 ELEVATION

SCALE: 1/4" = 1'-0"

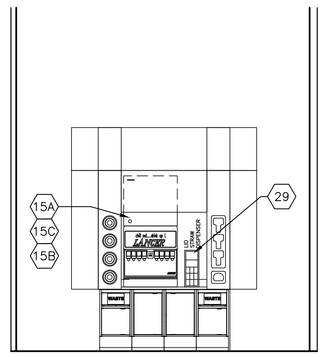

2 A401 ELEVATION

SCALE: 1/4" = 1'-0"

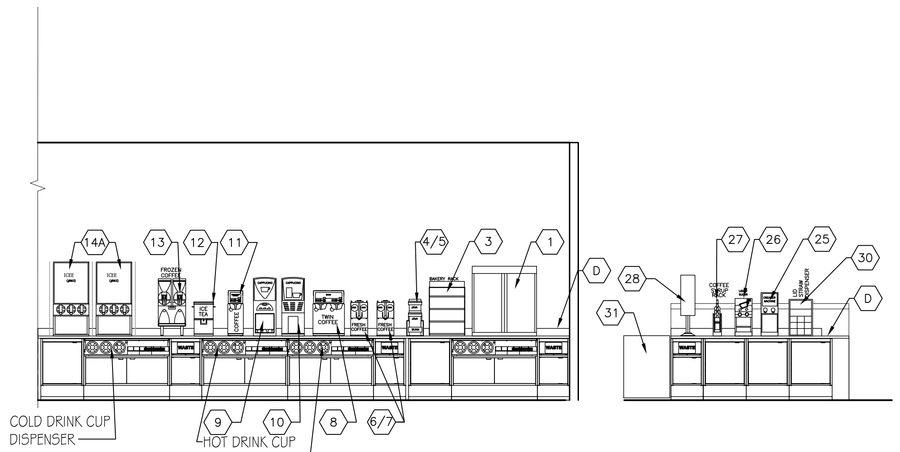

3 A401 ELEVATION

SCALE: 1/4" = 1'-0"

4 A401 ELEVATION

SCALE: 1/4" = 1'-0"

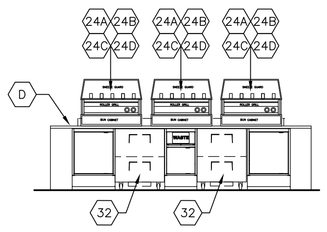

5 A401 ELEVATION

SCALE: 1/4" = 1'-0"

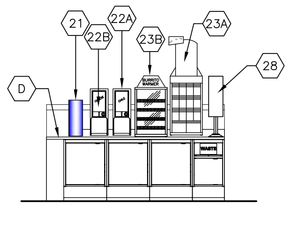

6 A401 ELEVATION

SCALE: 1/4" = 1'-0"

LEGEND:
AF = AAFES FURNISHED
AI = AAFES INSTALLED
VF = VENDOR FURNISHED
VI = VENDOR INSTALLED
CF = CONTRACTOR FURNISHED
CI = CONTRACTOR INSTALLED

NOTE: GENERAL CONTRACTOR IS RESPONSIBLE FOR FINAL HOOK-UP OF ALL PLUMBING WORK TO SERVE ALL AAFES & VENDOR INSTALLED EQUIPMENT.

NOTE: GENERAL CONTRACTOR IS RESPONSIBLE FOR FINAL HOOK-UP OF ALL EQUIPMENT TO ELECTRICAL POWER ON ALL AAFES & VENDOR INSTALLED EQUIPMENT.

NOTE: GENERAL CONTRACTOR IS RESPONSIBLE FOR FINAL PLUMBING AND ELECTRICAL HOOK-UPS OF ALL EQUIPMENT INDICATED TO BE INSTALLED BY THE CONTRACTOR.

TOILET ACCESSORY SCHEDULE

NOTES:
1. REFER TO SPECIFICATIONS FOR MANUFACTURER AND MODEL NUMBER.
2. TOILET ACCESSORIES SHALL BE MOUNTED ACCORDING TO ANSI 117.1 ACCESSIBILITY STANDARDS.

ITEM	DESCRIPTION
(1)	DUAL SEMI-RECESSED TOILET TISSUE DISPENSER
(2)	RECESSED COMBINATION PAPER TOWEL DISPENSER AND WASTE RECEPTACLE
(3)	SURFACE-MOUNTED SOAP DISPENSER
(4)	FRAMED MIRROR 18" X 36"
(5)	TOILET SEAT COVER DISPENSER
(6)	GRAB BARS
(7)	RECESSED-FEMININE NAPKIN DISPOSAL
(8)	BABY CHANGING STATION
(9)	COAT HOOK

SNACK AVENUE EQUIPMENT SCHEDULE

ITEM	Model # Description	MANUF / Distributor	Furnished	Installed	SIZE W"	D"	H"	ELECTRICAL	AMPS	PLUMBING	REMARKS	AAFES POC	NUMBER
1	PASTRY CABINET W/O COUNTER BASE (KRISPY KREME) – VENDOR PROVIDED IN CONUS	KRISPY KREME	VF	VI	36	18	39	NA	NA	NA		DEBBIE ROGERS	(214) 312-6987
2	NOT USED							NA	NA	NA			
3	BAKERY RACK	DELI EXPRESS	VF	AI	20	12	30	NA	NA	NA		JAN BRANDON	(214) 312-6987
4	AIRPOT, STAINLESS STEEL 2.5L (PRODUCT #32125.0000)	BUNN	AF	VI	6.3	9	14.6	NA	NA	NA		DEBBIE ROGERS	(214) 312-6987
5	AIRPOT RACK, MODEL UNIV-2APR (PRODUCT#35728.0000) TWO-POSITION	BUNN	AF	VI	7.5	24.1	14.1	NA	NA	NA			
6	COFFEE SERVER, TF 1.5 GALLON (PRODUCT #39550.004)	BUNN	AF	VI	9	13.8	14.8	NA	NA	NA		DEBBIE ROGERS	(214) 312-6987
7	SERVICE STAND, TF (PRODUCT #39795.0000)	BUNN	AF	VI	9.3	12.9	8.8	NA	NA	NA		DEBBIE ROGERS	(214) 312-6987
8	COFFEE BREWER, TWIN INFUSION, MODEL ICB-TWIN (PRODUCT#37600.0000)	BUNN	AF	VI	20	25.3	26.2	6050W; 120/240V / 60HZ / 1PH; NEMA 5-15P;	25	20-90 PSI WATER LINE, 3/8" MALE FLARE FITTING SUPPLIED	*3-WIRES PLUS GROUND SERVICE RATED 120/280V	DEBBIE ROGERS	(214) 312-6987
9	CAPPUCCINO DISPENSER, iMIX-3S, (PRODUCT#38600.0000)	BUNN	AF	VI	12.6	24.1	32.8	1800W; 120V / 60HZ / 1PH; NEMA 5-15P	15	20-100 PSI WATER, 1/4" MALE FLARE FITTING SUPPLIED	*PSI >90 REQUIRES REGULATOR TO REDUCE TO 50 PSI; 2-WIRES PLUS GROUND SERVICE RATED 120V	DEBBIE ROGERS	(214) 312-6987
10	HOT BEVERAGE DISPENSER, MODEL QBSWF-IT-LD MULTI FLAVOR	BUNN	AF	VI	14	25	37.5	1800W; 120V / 60HZ / 1PH; NEMA 5-15R	15	1/4" (6.4MM) WATER LINE REQUIRED		DEBBIE ROGERS	(214) 312-6987
11	ICE TEA BREWER, INFUSION, MODEL ITCB (PRODUCT #35700.0020)	BUNN	AF	VI	11.63	22.43	30.87	1700W; 120V / 60HZ / 1PH	14	20-90 PSI WATER LINE, 1/4" MALE FLARE FITTING SUPPLIED	*2-WIRES PLUS GROUND SERVICE	DEBBIE ROGERS	(214) 312-6987
12	ICE TEA DISPENSER, MODEL TDO-4 (PRODUCT #34100.0002)	BUNN	AF	VI	10.7	13.7	19	NA	NA	NA		DEBBIE ROGERS	(214) 312-6987
13	GOURMET ICE SYSTEM, ULTRA-2 HOPPER (PRODUCT #34000.0000)	BUNN	AF	VI	16	24.5	31.9	120V / 60HZ / 1PH; NEMA-5-15R	15	NA	*2-WIRES PLUS GROUND SERVICE RATED 120V	DEBBIE ROGERS	(214) 312-6987
14	NOT USED												
14A	CARBONATED BEVERAGE DISPENSER, ICEE, COUNTERTOP MODEL 563 (LEVEL 2-5 STORES)	ICEE	AF	VI	20.25	32.38	41.4	215-245V, / 60HZ / 1PH; 3 WIRE, NEMA #L-620R	30	30 PSI NO DRAIN	3HEAD, REQUIRES 2" AIR SPACE BACK AND SIDES	DEBBIE ROGERS	(214) 312-6987
15A	POST MIX: IBD 450D, MODEL 38-4530-GRNC; B VALVE	LANCER	AF	VI	30	30.5	34	115V / 60HZ / 1PH	15	1.5" DRAIN, 1" DRAIN,3/8" CW		DEBBIE ROGERS	(214) 312-6987
15B	ICE MACHINE BIN ADAPTER FOR (PART #82-9999-010311)	LANCER	AF	VI	30	30.5	2	NA	NA	NA		DEBBIE ROGERS	(214) 312-6987
15C	ICE MAKER FOR 15K MODULAR CRESCENT CUBER (KMD-700MAH)	HOSHIZAKI	AF	VI	30	24.75	28	208-230V / 60HZ / 1PH	20	1.5" OD COPPER OR EQ. IND. WATER SUPPLY, 3/4" FPT INDEP. DRAIN, 5/8"OD PIPE	*3-WIRES WITH DEDICATED NEUTRAL FOR 115V; FUSE / HACR BREAKER SIZE	DEBBIE ROGERS	(214) 312-6987
16A	MICROWAVE, MODEL #RFS12MPS	FPRBS HEVER & WALLACE	AF	AI	21.75	20.25	14.25	1800W; 120V / 60HZ / 1PH; NEMA 5-20	15.8A	NA		DEBBIE ROGERS	(214) 312-6987
16B	MICROWAVE, (VENDOR FURNISHED FOR DELI EXPRESS)	DELI EXPRESS	VF	AI								DEBBIE ROGERS	(214) 312-6987
17A	THREE-TIERED FRUIT BASKET, FLOOR STAND MODEL		AF	AI								SANDY COLEY	(214) 312-4371
18	COUNTERTOP FREEZER DISPLAY MODEL GDM-7F	TRUE	AF	AI	24	24.75	39.75	115V/60HZ/1PH	3.6A	NA		DEBBIE ROGERS	(214) 312-6987
19	NOT USED												
20A	SANDWICH COUNTERTOP COOLER GDM7 (VENDOR FURISHED FOR DELI EXPRESS SANDWICHES)	DELI EXPRESS	VF	AI	21	25	38.25	115V/60HZ/1PH	15	NA		DEBBIE ROGERS	(214) 312-6987
20B	SANDWICH COUNTERTOP COOLER GDM7 (VENDOR FURISHED FOR DEL MONTE FRUIT CUPS)	DEL MONTE	VF	AI	24	26.125	39.75	115V/60HZ/1PH	15	NA		DEBBIE ROGERS	(214) 312-6987
20C	SANDWICH COUNTERTOP COOLER GDM 7	TRUE	AF	AI	24	26.125	39.75	115V/60HZ/1PH	15	NA		DEBBIE ROGERS	(214) 312-6987
21	WIRE RACK CHIP DISPLAYER, GEHL'S	GOODWEST	AF	AI	7.75	16	20	NA	NA	NA	3 LEVEL BLACK WIRE RACK	DEBBIE ROGERS	(214) 312-6987
22A	CHILI CHEESE DISPLAYER, SINGLE-DISPENSER, GEHL'S	GOODWEST	VF	AI	9	17	23	200W; 120V	1.7	NA		DEBBIE ROGERS	(214) 312-6987
22B	CHEESE DISPLAYER, SINGLE-DISPENSER, GEHL'S	GOODWEST	VF	AI	9	17	23	200W; 120V	1.7	NA		DEBBIE ROGERS	(214) 312-6987
23A	HOT TO GO MODEL #690-25 – FOR DELI EXPRESS PRODUCTS	DELI EXPRESS	VF	AI	18	18	46	120V	5.3	NA		SANDY COLEY	(214) 312-4371
23B	HOT TO GO MODEL #690-25 – FOR RUIZ BURRITOS PRODUCTS	RUIZ	VF	AI	18	18	46	120V	5.3	NA		SANDY COLEY	(214) 312-4371
24A	HOTDOG HRS-S-505	SLANTED	AF	AI	34.75	18.625	11.25	120V/1320W, 11 AMPS, 60HZ / 1PH; NEMA 5-15P	7	NA		DEBBIE ROGERS	(214) 312-6987
24B	HOT DOG BUN CABINET, MODEL BC-50	APW WYOTT	AF	AI	34.688	18.625	6.375	NA	NA	NA		DEBBIE ROGERS	(214) 312-6987
24C	RETHERMALIZER DRAWER (HEATED)	APW WYOTT	AF	AI	35.5	19.5	9	NA	NA	NA		DEBBIE ROGERS	(214) 312-6987
24D	HOTDOG SNEEZE GUARD MDL#sg-50	APW WYOTT	AF	AI	34.688	1	6.375	NA	NA	NA		DEBBIE ROGERS	(214) 312-6987
24E	LG GRILL EASEL W/ CHANNEL	FOOD CONCEPTS											
25	CREAM MACHINE, GW2 DUAL PORT	BUNN	AF	AI	9.5	21.5	24.25	150W; 115V	2.0A	NA		DEBBIE ROGERS	(214) 312-6987
26	SUGAR MACHINE, LS2 DUAL PORT	BUNN	AF	AI	9.5	14	21	NA	NA	NA		DEBBIE ROGERS	(214) 312-6987
27	COFFEE SYRUP RACK	BUNN	AF	AI	4.75	18	12.5	NA	NA	NA		DEBBIE ROGERS	(214) 312-6987
28	NAPKIN HOLDER – PARTS 9135 POLE, 9023 NAPKIN DISP. 9908 DISP. DOOR	KIMBERLY CLARK	AF	AI	8	5.75	22.6	NA	NA	NA		DEBBIE ROGERS	(214) 312-6987
29	LID, STRAW & CONDIMENT ORGANIZER, NLO-1B, 302011	WASSERSTROM	AF	AI	8	20.5	16.5	NA	NA	NA		DEBBIE ROGERS	(214) 312-6987
30	LID, STRAW & CONDIMENT ORGANIZER, WLO-1B, 302091	WASSERSTROM	AF	AI	15	20.5	16.5	NA	NA	NA		DEBBIE ROGERS	(214) 312-6987
31	ICE CREAM FREEZER (CONUS)	NESTLE	VF	AI	53	25.75	34.75	120V / 60HZ / 1PH	4.5	NA	ICE CREAM NOVELTY'S FREEZER	DEBBIE ROGERS	(214) 312-6987
32	UNDERCOUNTER REFRIGERATOR DRAWER, MODEL TUC-27D-2-ADA	TRUE	AF	AI	27.625	30.125	29.75	115V / 60HZ / 1PH; NEMA 5-15P	15	NA		DEBBIE ROGERS	(214) 312-6987
33	UNDERCOUNTER FREEZER DRAWER, MODEL TUC-27F-D-2-ADA	TRUE	AF	AI	27.625	30.125	29.75	120V, REQUIRES DEDICATED 15A, 120V CIRCUIT NEMA 5-15P	15	NA		DEBBIE ROGERS	(214) 312-6987
46	FROZEN BEVERAGE BLENDER, MODEL FRLB5-2	F"REAL	AF	AI	12	20	30.5	115V / 60HZ / 1PH; NEMA 5-15P	15	FILTERED WATER SOURCE REQUIRED.1/4" ID BRADED INPUT LINE, 5/8" ID FLEX DRAIN LINE REQUIRED			
47	FREEZER MODEL#07-CS-GF-XT (FREE)	MINUS FORTY	AF	AI	27	29.4	34.5	120V, 60HZ	15				
									5				
50	BISCOTTI CANISTER		VF	AI	5.5	5.5	9	NA					
									NA				

SNACK AVENUE COUNTERS AND GRAPHIC

D	LEVEL 4 SNACK AVENUE COUNTERS AND SERVICE DESK	PAN OSTON	AF	AI								DEBBIE ROGERS	(214) 312-6987
G	SNACK AVENUE GRAPHIC PACKAGE (DESIGN PENDING)	CHUTE GERDEMAN	AF	AI									
H	CLASS SIX GRAPHIC PACKAGE (DESIGN PENDING)	CHUTE GERDEMAN	AF	AI									

AAFES Real Estate Directorate
AAFES (RE-C) P.O.BOX 660320 DALLAS, TX 75266-0320

KEY PLAN:

DATE	REVISION NO. & DESCRIPTION	BY

STATE OF ALABAMA · MONTGOMERY · EDWARD M. BRUMMAL · ALABAMA · REGISTERED ARCHITECT

PARSONS WIBLE BRUMMAL ALKIRE / ARCHITECTS INC.
MONTGOMERY, ALABAMA

DESIGN BY:

CHECKED BY: EMB

RECOMMENDED: DATE

APPROVED: DATE

ARMY & AIR FORCE EXCHANGE SERVICE
DEPARTMENTS OF THE ARMY & AIR FORCE

RE-C
REAL ESTATE DIRECTORATE

PROJECT:
TYNDALL AFB
CONSTRUCT SHOPPETTE/ FOOD/CLASS 6/GAS

TYNDALL AFB, FLORIDA

DRAWING TITLE:
SNACK AVENUE PLAN & SCHEDULE, TOILET ELEVATIONS & SCHEDULE

DATE:	SCALE:	SHEET:
18 JAN. 2012	AS NOTED	A401

DRAWING PROJECT NO.
0941-09-000003

BLIMPIE EQUIPMENT SCHEDULE

TAG	QTY	NAME	MODEL#	DIMENSIONS L	W	H	ELECTRICAL VOLT	Hz	PHASE	HP	AMPS	WATTS	NEMA	PLUMBING WATER	DRAIN	NOTES MANUFACTURER	SUPPLIER	INSTALLER
6	1	PARTITION WALL RIGHT	-	66"	5"	52.5"										FINN	AF	CI
	0	PARTITION WALL LEFT	-	66"	5"	52.5"										FINN	AF	CI
7	3	CHIP RACK	-	39"	12"	34"										FINN	AF	CI
8	1	PARTITION WALL	-	60"	5"	36"										FINN	AF	CI
9	1	TRASH UNIT	-	12"	35"	36"										FINN	AF	CI
10	1	STRAIGHT COUNTER	-	27 7/8"	36.5"	34"										FINN	AF	CI
11	1	WRAPPING KIT	-	26.25"	24.75"	24 15/16"										FINN	AF	CI
15	1	60" BACK MICROWAVE CABINET	-	60"	30 7/8"	34"										FINN	AF	CI
16	1	36" BACK CABINET	-	36"	30 7/8"	34"										FINN	AF	CI
18	1	24" BACK CABINET w/SINK	-	24"	30 7/8"	36"								1/2"	2"	FINN	AF	CI
20	1	SNEEZE GUARD RIGHT CLEAR TEMPERED GLASS	CUSTOM	65"	12"	18"										FINN	AF	CI
21	5	CUP DISPENSER	C2410C	-	-	23.5"										SAN JAMAR	AF	CI
25	1	32" MEAT CASE	D4432N-12M-BLP-3	32.13"	31.5"	36"	115	60	1	1/5	6.5		5-15P			DELFIELD	AF	CI
26	1	30" SLICER STAND	160S30-BLP2	30"	30"	36"										DELFIELD	AF	CI
28	1	60" DRESSING STATION /W 2.5" CASTORS & 72" CUTTING BOARD	4460N-14-BLP2	60.375"	31.125"	39.25"	115	60	1	1/2	12.0		5-15P			DELFIELD	AF	CI
32	1	MANUAL SLICER	3600P	25"	22"	21"	115	60	1	1/2	7.0		5-15P			GLOBE	AF	CI
33	1	AUTO-SLICER w/VEG. HOPPER	3850-H	22"	25"	24.75"	115	60	1	1/2	7		15-5P			GLOBE	AF	CI
38	1	COOKIE CASE	47033	20.25"	17.5"	18.25"										BEST RESTAURANT	AF	CI
39	1	MOBILE CUP DISPENSER	-	-	-	-										SAN JAMAR/W CASTERS	AF	CI
40	1	POINT OF SALE TERMINAL	3301	14.2"	16.8"	14.2"	120	60	1							FOCUS	AF	AF
	1	BLIMPIEPROGRAMMING	N/A	N/A	N/A	N/A										FOCUS	AF	AF
	1	BREAKFAST PROGRAMMING	NA	NA	NA	NA										FOCUS	AF	AF
44	1	SOUP MERCHANDISER	6510-T4-BLM	25.125"	16"	10.25"	120	60	1		10.0	1200	5-15P			NEMCO	AF	CI
47	1	SANDWICH PRESS	CG14IT	19 5/8"	24 3/4"	17 1/4"	120	60	1		15.0		5-15P			STAR	AF	CI
48	1	MICROWAVE OVEN	NE-1258	20 1/8"	13 1/4"	18 1/2"	120	60	1		20.0		5-20P			PANASONIC	AF	CI
49	1	MENU BOARD	N/A	10'	N/A	30"										POSTERLOID	AF	CI
50	1	ENCLOSED BREAD RACK	ER-18	21.5"	28.75"	70.25"										SUPER SYSTEMS	AF	CI
	0	RIGHT HINGE	N/A	N/A	N/A	N/A										SUPER SYSTEMS	AF	CI
	1	LEFT HINGE	N/A	N/A	N/A	N/A										SUPER SYSTEMS	AF	CI
51	1	OPEN BREAD RACK	900004-BL	20.5"	26"	65"										SUPER SYSTEMS	AF	CI
53	1	BREAD OVEN	OP-3	32.5"	36"	74.5"	120 208	60	1		40.0					SUPER SYSTEMS	AF	CI
	1	RIGHT HINGED	N/A	N/A	N/A	N/A										SUPER SYSTEMS	AF	CI
54	1	PEPSI DISPENSER DROP-IN	2323	23"	23"		120	60	1		1.5		5-15P	3/8	3/4	CORNELIUS	VENDOR (AF)	VENDOR (AI)
55	1	BAG N BOX & CO2	N/A	39"	19"	N/A										VENDOR	VENDOR (AF)	VENDOR (AI)
56	1	ICE MACHINE W/ BIN B55	ICE0400HT	30"	24"	20"	115	60	1		14.4		5-15P	3/8"		ICE-O-MATIC	AF	CI
69	1	3 COMP SINK LR DRAIN BOARD	PS3-18L	90"	24"	36"								1/2"	3.5"	TARRISON	AF	CI
72	1	1 COMP SINK L DRAIN BOARD	PS1-18L	39"	24"	36"								1/2"	3.5"	TARRISON	AF	CI
73	2	FAUCET FOR COMP SINKS	807012B	N/A	N/A	N/A										TARRISON	AF	CI
74	1	MOP SINK	F1916	24"	20"	8 7/8"									3.5"	EAGLE	AF	CI
75	1	FAUCET FOR MOP SINK	312690/312689	N/A	N/A	N/A										EAGLE	AF	CI
76	1	WALL-MOUNTED HAND SINK	HAS-10-FO	17"	15.25"	13.375"								1/2"	2"	TARRISON	AF	CI
79	2	6' SS WORK TABLE	WT3072	72"	30"	35"										TARRISON	AF	CI
82	1	24X72 WALL MOUNTED SHELF	TS-S2472Z	72"	24"	N/A										TARRISON	AF	CI
83	4	18X36 FREE STANDING SHELF	S4-74-1836	36"	18"	74"										TARRISON	AF	CI
84	6	18X48 FREE STANDING SHELF	S4-74-1848Z	48"	18"	74"										TARRISON	AF	CI
89	1	WALK-IN FREEZER	-	-	-	-	208 230	60	1		20.0		6-20P			KOLPAK	AF	CI
90	1	WALK-IN COOLER	-	-	-	-	208 230	60	1		-		-			KOLPAK	AF	CI
95	1	CUSTOM STRAIGHT COUNTER	CUSTOM	26"	36.5"	34"											CF	CI
96	1	INTERIOR SIGN FREEFORM	N/A	52"	5"	18"											AF	CI

BLIMPIE ACCESSORY SCHEDULE (NOT SHOWN ON PLAN)

ID#	QTY	NAME	MODEL#
701	1	McGUNN QUICK DROP SAFE	QD1613
14555	2	FLOOR MAT	N/A
T.B.D.	1	SMALL WARES PAKAGE	N/A
T.B.D.	1	P.O.P PACKAGE	N/A

ROOM FINISH SCHEDULE (CF/CI)

ROOM NO.	NAME	FLOOR	BASE	WALLS NORTH	EAST	SOUTH	WEST	CEILING MATL	HEIGHT	CASEWORK FRONT	TOP	SPLASH
111	SERVERY	QT1	QT2	FRP2	FRP2	FRP2	FRP2	AT1	10'	-	-	-
112	KITCHEN	QT1	QT2	FRP1	FRP1	FRP1	FRP1	AT1	10'	-	-	-
113	UTILITY	QT1	QT2	FRP1	FRP1	FRP1	FRP1	AT1	10'	-	-	-

MATERIAL SCHEDULE

CODE	MATERIAL	MANUFACTURER	NUMBER	COLOR/NAME	SIZE(S)	REMARKS & CONTACT NAMES
AT1	VINYL-FACED GYPSUM BD.	USG	3270	WHITE VINYL FACED (SCRUBBLE)	24"x24"	CEILING TILE
FRP1	FIBERGLASS REINFORCED PANELS	MARLITE	P-100	WHITE	-	
FRP2	FIBERGLASS REINFORCED PANELS	MARLITE	SYMMETRIX C118-G-44	ALMOND	-	
QT1	6"X6" QUARRY TILE	DAL-TILE	QUARRY TEXTURE SERIES	DIABLO RED	6"X6"	
QT2	5"X6" COVE BASE	DAL-TILE	QUARRY TEXTURE SERIES	DIABLO RED	5"X6"	

NOTE:
1. GENERAL CONTRACTOR IS RESPONSIBLE FOR FINAL HOOK-UP OF ALL PLUMBING WORK TO SERVE ALL AAFES & VENDOR INSTALLED EQUIPMENT.

2. GENERAL CONTRACTOR IS RESPONSIBLE FOR FINAL HOOK-UP OF ALL EQUIPMENT TO ELECTRICAL POWER ON ALL AAFES & VENDOR INSTALLED EQUIPMENT.

3. GENERAL CONTRACTOR IS RESPONSIBLE FOR FINAL PLUMBING AND ELECTRICAL HOOK-UPS OF ALL EQUIPMENT INDICATED TO BE INSTALLED BY THE CONTRACTOR.

NOTE:
BLIMPIE EQUIPMENT & FINISHES SUBJECT TO CHANGE. VERIFY EQUIPMENT SCHEDULES & FINISHES WITH COMPANY REPRESENTATIVE PRIOR TO PURCHASE.

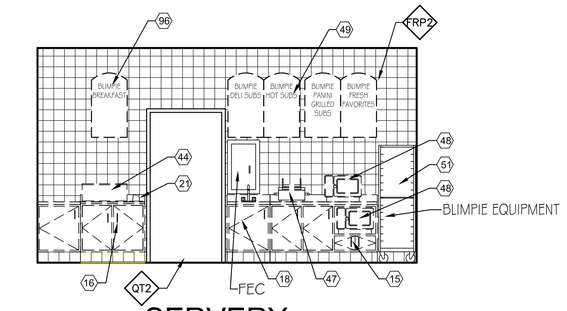

E A402 SERVERY ELEVATION
SCALE: 1/4" = 1'-0"

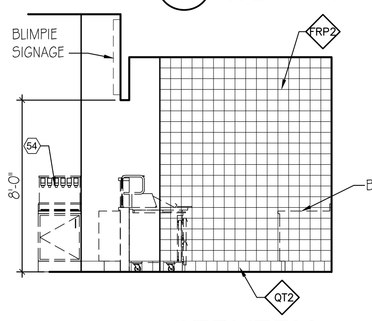

C A402 SERVERY ELEVATION
SCALE: 1/4" = 1'-0"

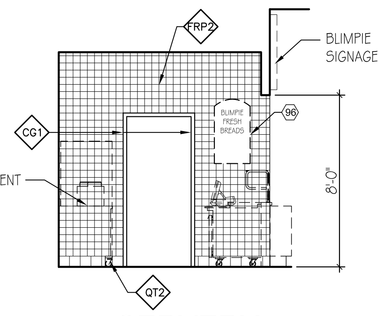

D A402 SERVERY ELEVATION
SCALE: 1/4" = 1'-0"

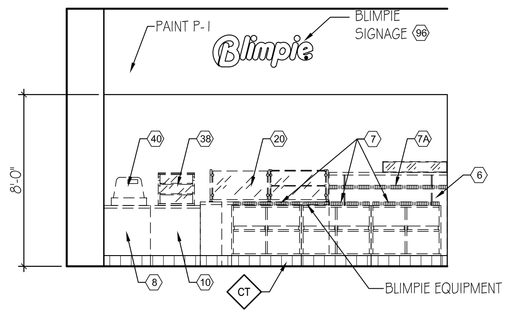

A A402 COUNTER ELEVATION
SCALE: 1/4" = 1'-0"

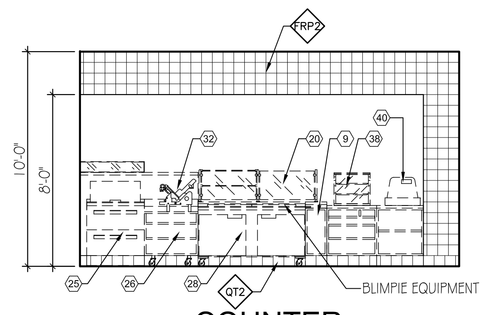

B A402 COUNTER ELEVATION
SCALE: 1/4" = 1'-0"

NOTE:
AF = AAFES FURNISHED
AI = AAFES INSTALLED

CF = CONTRACTOR FURNISHED
CI = CONTRACTOR INSTALLED

NOTE:
1. SEE SHEET A600 FOR ROOM FINISH SCHEDULE.

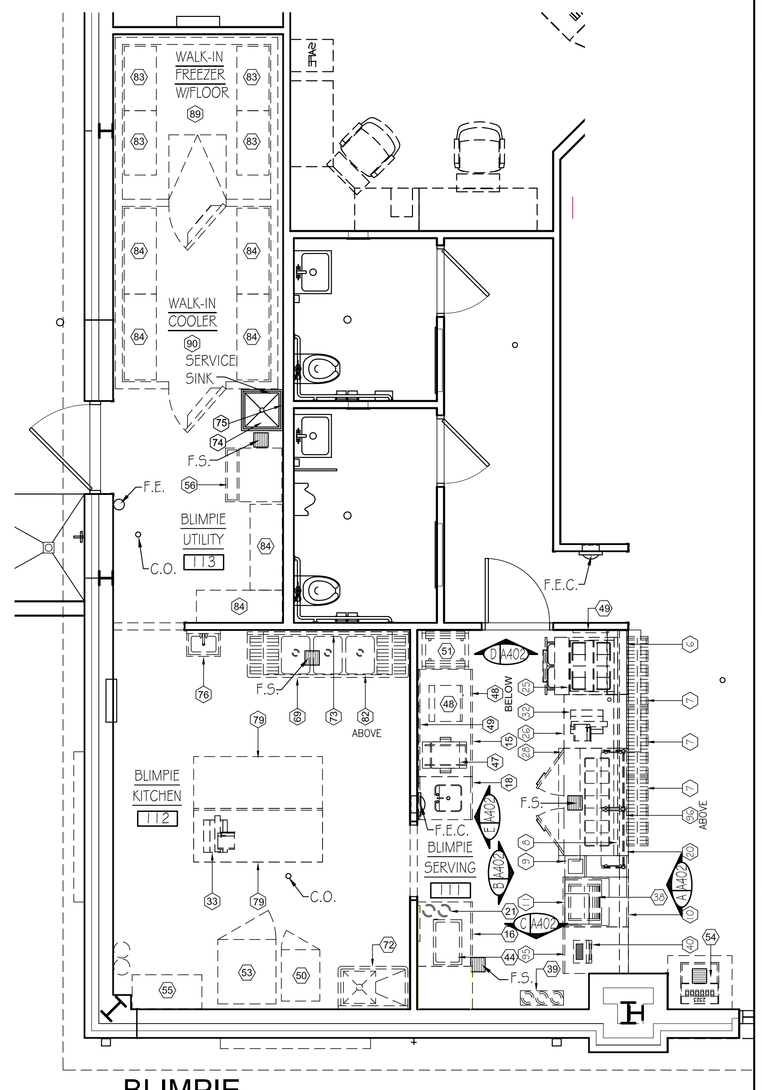

A A402 BLIMPIE EQUIPMENT PLAN
SCALE: 1/4" = 1'-0"
0' 12" 4' 2'
6" 2" 0"

AAFES Real Estate Directorate
AAFES (RE-C) P.O.BOX 660320 DALLAS, TX 75266-0320

KEY PLAN:

DATE	REVISION NO. & DESCRIPTION	BY

STATE OF ALABAMA MONTGOMERY EDWARD M. BRUMMAL ALABAMA REGISTERED ARCHITECT

PARSONS WIBLE BRUMMAL ALKIRE / ARCHITECTS INC.
MONTGOMERY, ALABAMA

DESIGN BY:
CHECKED BY: EMB
RECOMMENDED: DATE
APPROVED: DATE

ARMY & AIR FORCE EXCHANGE SERVICE
DEPARTMENTS OF THE ARMY & AIR FORCE

RE-C
REAL ESTATE DIRECTORATE

PROJECT:
TYNDALL AFB
CONSTRUCT SHOPPETTE/ FOOD/CLASS 6/GAS

TYNDALL AFB, FLORIDA

DRAWING TITLE:
BLIMPIE EQUIPMENT PLAN & SCHEDULES

DATE: 18 JAN. 2012
SCALE: AS NOTED
SHEET: A402
DRAWING PROJECT NO. 0941-09-000003

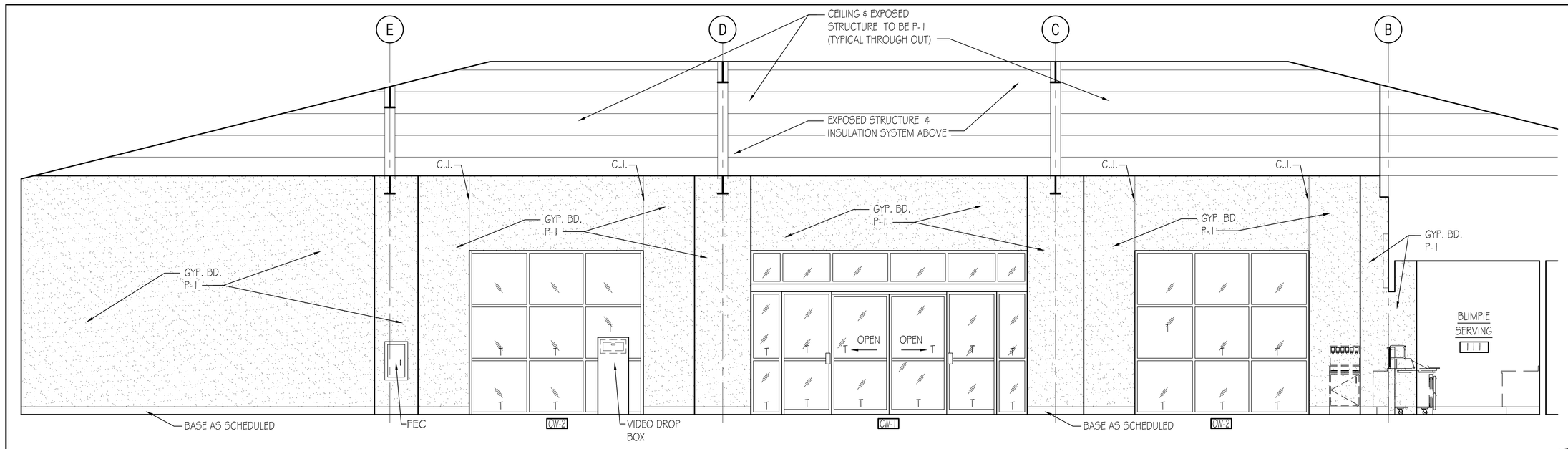

A A403 ELEVATION
SCALE: 1/4" = 1'-0"

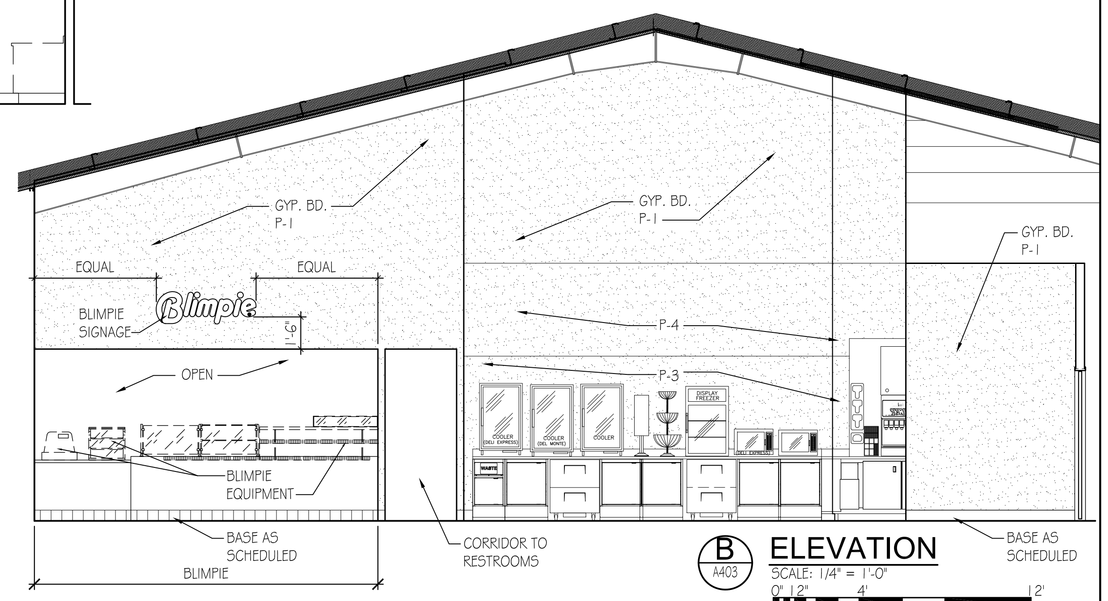

B A403 ELEVATION
SCALE: 1/4" = 1'-0"

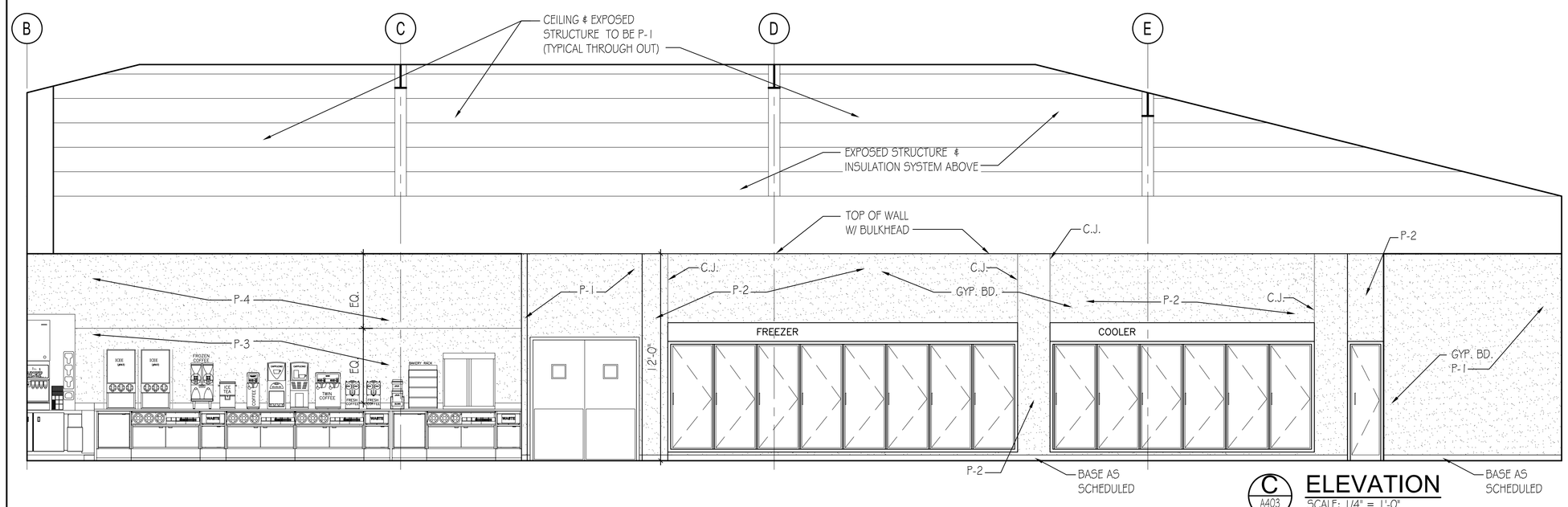

C A403 ELEVATION
SCALE: 1/4" = 1'-0"

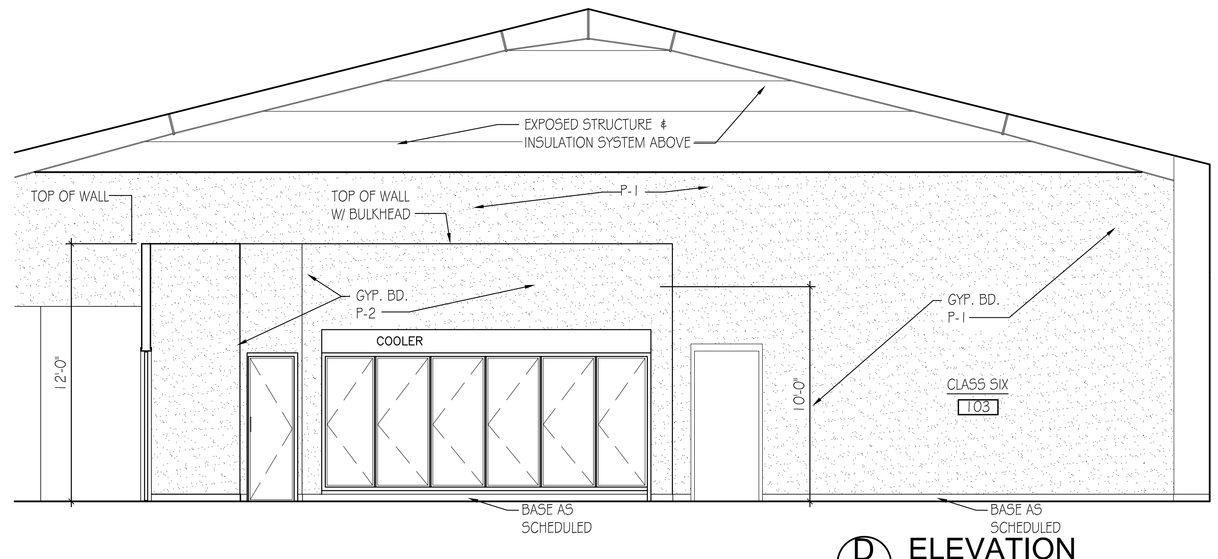

D A403 ELEVATION
SCALE: 1/4" = 1'-0"

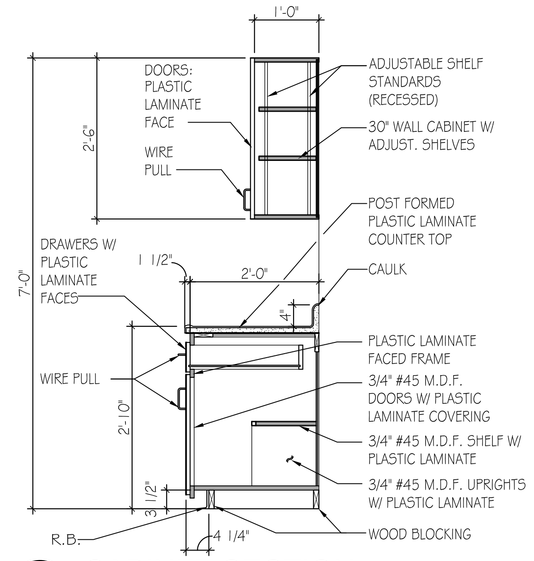

1 A403 CABINET SECTION
SCALE: 3/4" = 1'-0"

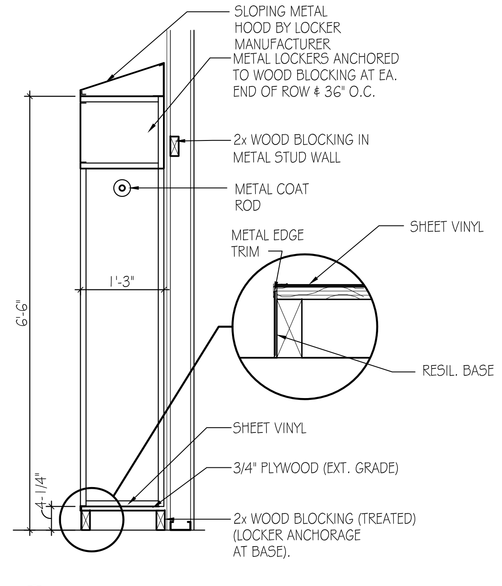

2 A403 LOCKER SECTION
SCALE: 3/4" = 1'-0"

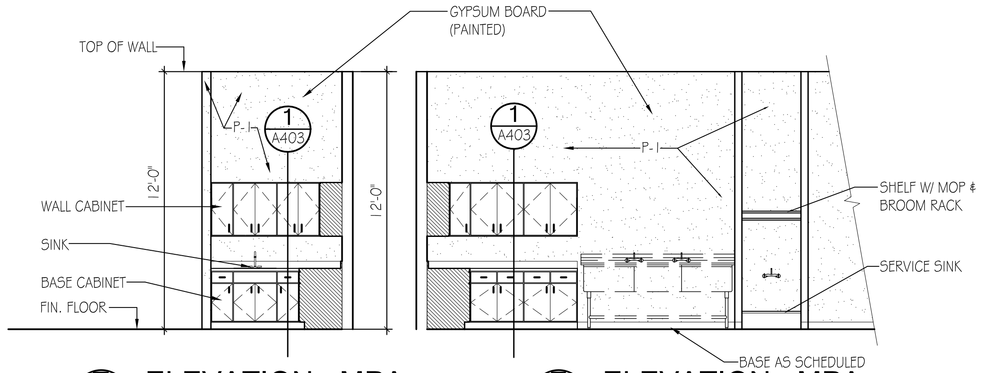

E A403 ELEVATION - MPA
SCALE: 1/4" = 1'-0"

F A403 ELEVATION - MPA
SCALE: 1/4" = 1'-0"

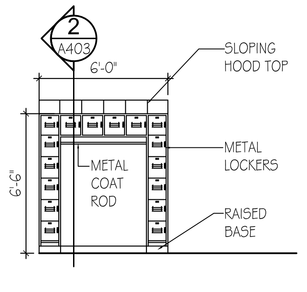

G A403 LOCKER ELEVATION
SCALE: 1/4" = 1'-0"

AAFES Real Estate Directorate
AAFES (RE-C) P.O.BOX 660320 DALLAS, TX 75266-0320

KEY PLAN:

DATE	REVISION NO. & DESCRIPTION	BY

STATE OF ALABAMA · MONTGOMERY · EDWARD BRUMMAL · ALABAMA REGISTERED ARCHITECT

PARSONS WIBLE BRUMMAL ALKIRE / ARCHITECTS INC.
MONTGOMERY, ALABAMA

DESIGN BY:
CHECKED BY: EMB
RECOMMENDED: DATE
APPROVED: DATE

ARMY & AIR FORCE EXCHANGE SERVICE
DEPARTMENTS OF THE ARMY & AIR FORCE

RE-C
REAL ESTATE DIRECTORATE

PROJECT:
TYNDALL AFB
CONSTRUCT SHOPPETTE/ FOOD/CLASS 6/GAS

TYNDALL AFB, FLORIDA

DRAWING TITLE:
INTERIOR ELEVATIONS & SECTIONS

DATE:	SCALE:	SHEET:
18 JAN. 2012	AS NOTED	A403

DRAWING PROJECT NO.
0941-09-000003

FINISH SCHEDULE

ROOM NO.	ROOM NAME	FLOOR	BASE	WALLS								CEILING			REMARKS
				NORTH		SOUTH		EAST		WEST					
				MATL.	FIN.	MATL.	FIN.	MATL.	FIN.	MATL.	FIN.	MATL.	FIN.	HGT.	
100	SHOPPETTE	ICCC	RB-1	GWB	P-1	GWB	P-1	GWB	P-1	GWB	P-1	EXPOSED STRUCT	P-1	———	ALL WALLS TO HAVE SMOOTH FINISH, P-2 AT BULKHEAD ABOVE COOLER/FREEZER SEE ELEVATIONS ON SHEET A403
101	CASHIER/TOBACCO	ICCC	RB-1	-	-	-	-	-	-	-	-	EXPOSED STRUCT	P-1	———	ALL WALLS TO HAVE SMOOTH FINISH
102	SNACK AVENUE	ICCC	RB-1	-	-	GWB	P-3/P-4	GWB	P-1 P-3/P-4	-	-	EXPOSED STRUCT	P-1	———	ALL WALLS TO HAVE SMOOTH FINISH, SEE ELEVATIONS B/A403 & C/A403
103	CLASS SIX	ICCC	RB-1	GWB	P-1	-	-	-	-	GWB	P-1	EXPOSED STRUCT	P-1	———	ALL WALLS TO HAVE SMOOTH FINISH
104	SHOPPETTE/CLASS SIX MPA	SC	RB-1	GWB	P-1	GWB	P-1	GWB	P-1	GWB	P-1	EXPOSED STRUCT	P-1	———	
105	OFFICE	CP-1	RB-1	GWB	P-1	GWB	P-1	GWB	P-1	GWB	P-1	LT-1	———	9-0"	
106	WALK-IN FREEZER	*	PREFAB WALL & ROOF PANELS BY FREEZER / COOLER MANUFACTURER												*FLOOR BY FREEZER MANUF.
107	WALK-IN COOLER	SC													
108	CORRIDOR	ICCC	RB-1	GWB	P-1	GWB	P-1	GWB	P-1	GWB	P-1	LT-1	———	9-0"	
109	MEN	PT-1	PT-1	GWB	PT-1	GWB	PT-1	GWB	PT-1	GWB	PT-1	GWB	P-2	9-0"	
110	WOMEN	PT-1	PT-1	GWB	PT-1	GWB	PT-1	GWB	PT-1	GWB	PT-1	GWB	P-2	9-0"	
111	BLIMPIE SERVING *	*	*	*	*	*	*	*	*	*	*	*	———	10'-0"	*SEE SHEET A402 FOR BLIMPIE ROOM FINISH SCHEDULE
112	BLIMPIE KITCHEN *	*	*	*	*	*	*	*	*	*	*	*	———	10'-0"	*SEE SHEET A402 FOR BLIMPIE ROOM FINISH SCHEDULE
113	BLIMPIE UTILITY *	*	*	*	*	*	*	*	*	*	*	*	———	10'-0"	*SEE SHEET A402 FOR BLIMPIE ROOM FINISH SCHEDULE
114	COMM. / ELECTRICAL	SC	RB-1	GWB	P-1	GWB	P-1	GWB	P-1	GWB	P-1	EXPOSED STRUCT	———	———	

FINISH MATERIAL ABBREVIATIONS

CP	=	CARPET
GWB	=	GYPSUM WALL BOARD
FRP	=	FIBERGLASS REINFORCED PANELS
LT	=	LAY-IN ACOUSTICAL TILE
P	=	PAINT
PL	=	PLASTIC LAMINATE
PT	=	PORCELAIN TILE
RB	=	RUBBER BASE
SC	=	SEALED CONCRETE
ST	=	STUCCO
EXP. STRUCT.	=	EXPOSED STRUCTURE
PTB	=	PORCELAIN TILE BASE
CONC.	=	CONCRETE W/ SEALER / HARDENER
ICCC	=	INTEGRALLY COLORED CAST CONCRETE

INTERIOR FINISHES

CEILINGS

P-1 ACRYLIC LATEX PAINT, LOW VOC, SHERWIN WILLIAMS, CONNECT GRAY (SW 6165)
P-2 ACRYLIC LATEX PAINT, LOW VOC, USG OR SIMILAR, READY MIX NAVAJO WHITE, SIMI-GLOSS

LT-1 LAY-IN ACOUSTICAL TILE, WHITE, FISSURED - 24"X48" USG #562, DONN DX GRID, WHITE.

GWB 5/8" GYPSUM WALL BOARD

FLOORING

PT-1 PORCELAIN TILE, 12"x12", BIANCO APUANI CD-53, WHITE DAL-TILE
GROUT: "MAPEI" SAND GROUT - #27 SILVER

SC SEALED CONCRETE - AT WALK-IN COOLER, CONCRETE FLOOR TO BE DOUBLE SEALED.

ICCC INTEGRALLY COLORED CAST CONCRETE - DAVIS COLORS #5237 SEQUOIA SANDSTONE

CP-1 CARPET : J&J INVISION "BROKEN SLATE MODULAR" (7950) COLOR: 388 "PYRITE" LOW VOC ADHESIVE CONTRACTOR FURNISHED. CARPET IS AAFES FURNISHED CONTRACTOR INSTALLED. INSTALL IN AN ALTERNATING CHECKERBOARD PATTERN.

BASES

RB-1 4" HIGH RUBBER COVE BASE, LOW VOC ADHESIVE, ARMSTRONG, GRAPHITE GREY, #61

PT-1 6" HIGH PORCELAIN TILE BASE

WALLS

NOTE: ALL VERTICAL PAINTED WALL SURFACES SHALL HAVE SATIN FINISH AND ORANGE PEAL TEXTURE UNLESS NOTED OTHERWISE.
GWB 5/8" GYPSUM WALL BOARD
P-1 ACRYLIC LATEX PAINT, LOW VOC, SHERWIN WILLIAMS, IVOIRE (SW 6127)
P-2 ACRYLIC LATEX PAINT, LOW VOC, SHERWIN WILLIAMS, INDIGO (SW 6531)
P-3 ACRYLIC LATEX PAINT, LOW VOC, SHERWIN WILLIAMS, LUXURIOUS RED (SW 6314)
P-4 ACRYLIC LATEX PAINT, LOW VOC, SHERWIN WILLIAMS, TANAGER (SW6601)
FRP FIBERGLASS REINFORCED PANELS, MARLITE C-118-044, COLOR: ALMOND
PT-1 WALLS, FIELD, BASE, DAL - TILE 6X6, # SC40 FIELD TILE ABOVE ACCENT BAND / BROWN TO CEILING - SANDED GROUT - LATICRETE 523
WALLS, FIELD, BORDER, DAL - TILE 3X3, # P506 "LEATHER" FIELD TILE ABOVE WAINSCOT, SANDED GROUT - LATICRETE 523
WALLS, WAINSCOT, BASE, DAL - TILE, 12X12, #M122 UP TO ACCENT BAND / BROWN - MAPEI SANDED GROUT #9 GRAY

MISCELLANEOUS INTERIOR FINISHES

FREE STANDING STEEL COLUMNS (INTERIOR)	MATCH WALLS (SEMI-GLOSS)
H.M. FRAMES (INTERIOR):	MATCH ADJACENT WALL (SEMI-GLOSS)
H.M. DOORS (INTERIOR):	MATCH ADJACENT WALL (SEMI-GLOSS)
EXPOSED STRUCTURE, STEEL FRAME & ROOF DECK /INSUL. BD	PAINTED (SEMI-GLOSS)
INTERIOR WOOD DOORS:	PLASTIC LAMINATE FACES : PAN OSTON #WX031, PEARWOOD
CABINET WORK:	
CASE: WILSONART #D381-60 FASHION GRAY, MATTE FINISH	
TOPS & BACKSPLASHES: PIONITE #SB009 ROYAL BLUE, SUEDE FINISH. AT TOILETS LAMINATE PIONITE SP 401 ROYAL BURGUNDY	
TOILET PARTITIONS LAMINATE PIONITE SP 401 ROYAL BURGUNDY	

EXTERIOR FINISHES

NOTE: ALL EXTERIOR FINISHES MUST BE APPROVED BY BASE PRIOR TO ORDERING

ARCH. CMU-SMOOTH / SPLITFACE	MATCH BASE STANDARDS, MAY REQUIRE CUSTOM COLOR
STANDING SEAM METAL ROOF:	MATCH BASE STANDARDS, MAY REQUIRE CUSTOM COLOR
METAL COPING, DOWNSPOUTS GRAVEL GUARDS:	MATCH STANDING SEAM METAL ROOF
CURTAIN WALL:	DARK BRONZE ANODIZED
CURTAIN WALL GLAZING:	BRONZE TINTED
EXTERIOR H.M. DOORS & FRAMES	MATCH ADJACENT ARCH. CMU COLOR
FUEL CANOPY FASCIA PANEL	WHITE W/ AAFES LOGO PACKAGE - VERIFY COLOR REQUIREMENTS WITH INSTALLATION
FUEL CANOPY SOFFIT	WHITE - VERIFY COLOR REQUIREMENTS WITH INSTALLATION
FUEL CANOPY COLUMNS	WHITE - VERIFY COLOR REQUIREMENTS WITH INSTALLATION
METAL SOFFIT	WHITE - VERIFY COLOR REQUIREMENTS WITH INSTALLATION
LOUVERS	DARK BRONZE ANODIZED
CAULK & SEALANTS	AT ARCH. CMU CONTROL JOINTS, MATCH ARCH. CMU COLOR
	AT DOOR & WINDOWS, MATCH DOOR & WINDOW FRAME COLOR
STUCCO:	MATCH ARCHITECTURAL CMU COLOR
ARCHITECTURAL METAL PANELS:	AS SELECTED BY INSTALLATION (AT FRONT ENTRANCE) & APPROVED BY AAFES.

AAFES Real Estate Directorate
AAFES (RE-C) P.O.BOX 660320 DALLAS, TX 75266-0320

KEY PLAN:

DATE	REVISION NO. & DESCRIPTION	BY

STATE OF ALABAMA · MONTGOMERY · EDWARD M. BRUMMAL · REGISTERED ARCHITECT · ALABAMA

PARSONS WIBLE BRUMMAL ALKIRE / ARCHITECTS INC.
MONTGOMERY, ALABAMA

DESIGN BY:
CHECKED BY: EMB
RECOMMENDED: DATE
APPROVED: DATE

ARMY & AIR FORCE EXCHANGE SERVICE
DEPARTMENTS OF THE ARMY & AIR FORCE

RE-C
REAL ESTATE DIRECTORATE

PROJECT:
TYNDALL AFB
CONSTRUCT SHOPPETTE/ FOOD/CLASS 6/GAS

TYNDALL AFB, FLORIDA

DRAWING TITLE:
FINISH SCHEDULE AND LEGENDS

DATE:	SCALE:	SHEET:
18 JAN. 2012	AS NOTED	A600

DRAWING PROJECT NO.
0941-09-000003

DOOR SCHEDULE

DOOR NO.	DOOR TYPE	FRAME TYPE	FIRE RATING	HEAD DETAIL	JAMB DETAIL	SILL DETAIL	REMARKS
100a	AL-1	CW-1*	———	9/A601	10/A601 11/A601	12/A601 13/A601	*AUTOMATIC SLIDING DOOR IN CURTAIN WALL FRAME TYPE "CW-1"
100b	PL-1	———	———	———	———	———	DOUBLE ACTING DOORS W/FRAME BY DOOR MFG.
103	HM-1	HM3	———	1/A601	2/A601	3/A601	EMERGENCY EGRESS DOOR
104	HM-2	HM4	———	1/A601	2/A601	3/A601	
105	WD-1	HM1	———	4/A601	5/A601	———	
109	WD-1	HM1	———	4/A601	5/A601	6/A601	
110	WD-1	HM1	———	4/A601	5/A601	6/A601	
111a	WD-1	HM1	———	4/A601	5/A601	6/A601	
111b	———	HM1 *		4/A601	5/A601sim	———	*CASED OPENING, NO STOPS ON FRAME
113	HM-1	HM3	———	1/A601	2/A601	3/A601	
114	HM-1	HM3	———	1/A601	2/A601	3/A601	
115	———	———	———	———	———	———	CHAINLINK FENCE GATE AT RECYCLE AREA 3'-0" x 7'-0"

DOOR TYPES: T= TEMPERED GLAZING

SCALE: 1/4" = 1'-0"

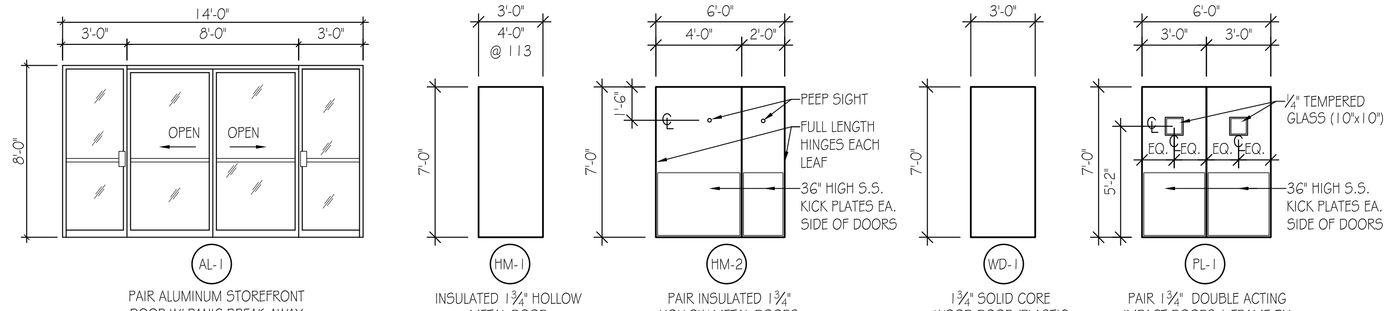

LOUVER TYPE:

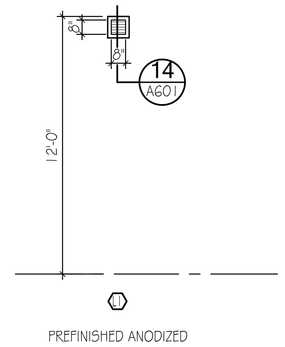

CURTAIN WALL TYPES:

1" INSULATING GLASS, BRONZE TINTED AT ALL CURTAIN WALL LOCATIONS
T= TEMPERED GLAZING

SCALE: 1/4" = 1'-0"

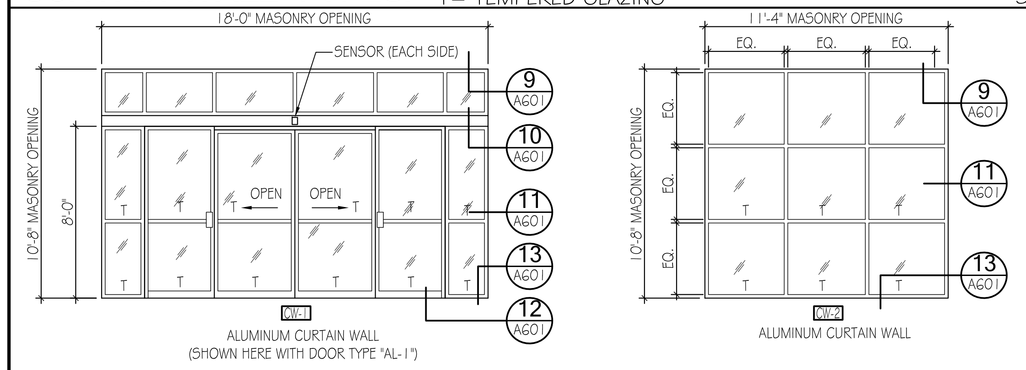

DOOR FRAME TYPES:

SCALE: 1/4" = 1'-0"

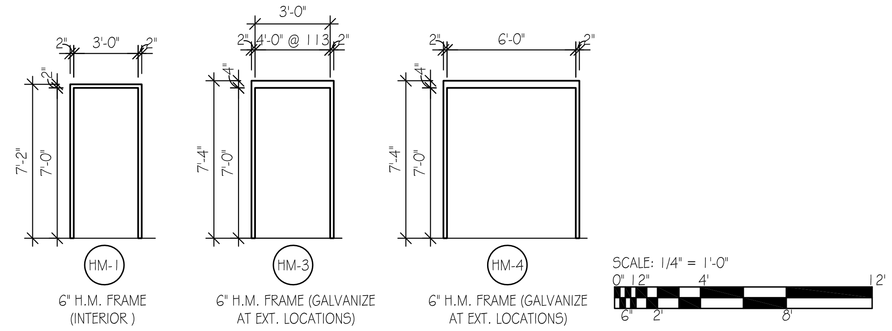

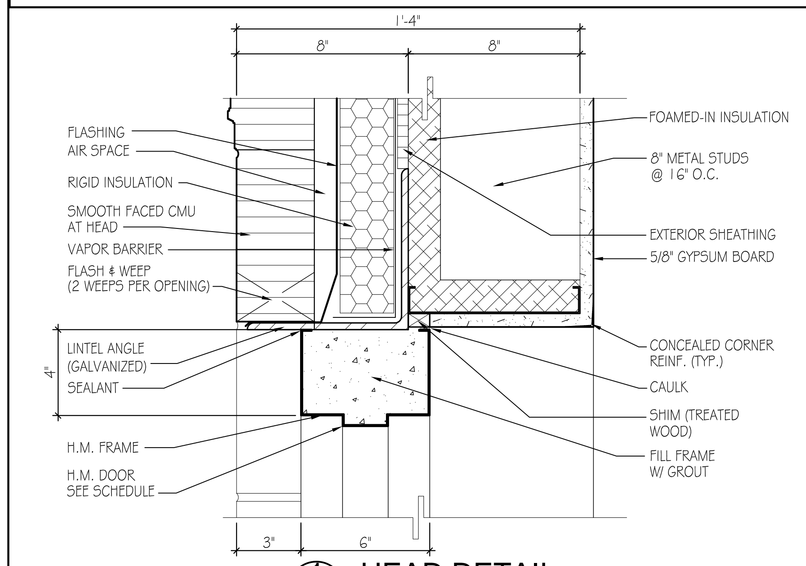

1 A601 HEAD DETAIL
SCALE: 3" = 1'-0"

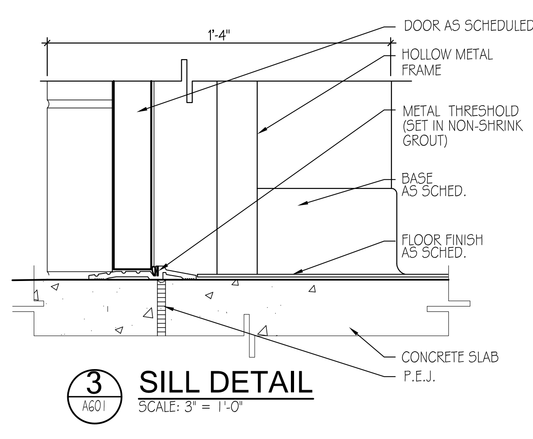

3 A601 SILL DETAIL
SCALE: 3" = 1'-0"

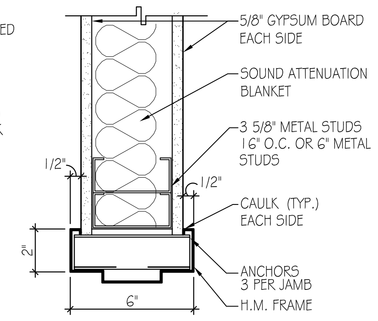

NOTE: 3-5/8" METAL STUD WALL = 6" H.M. FRAME REQ.'D
NOTE: 6" METAL STUD WALL = 8" H.M. FRAME REQ.'D

5 A601 JAMB DETAIL
SCALE: 3" = 1'-0"

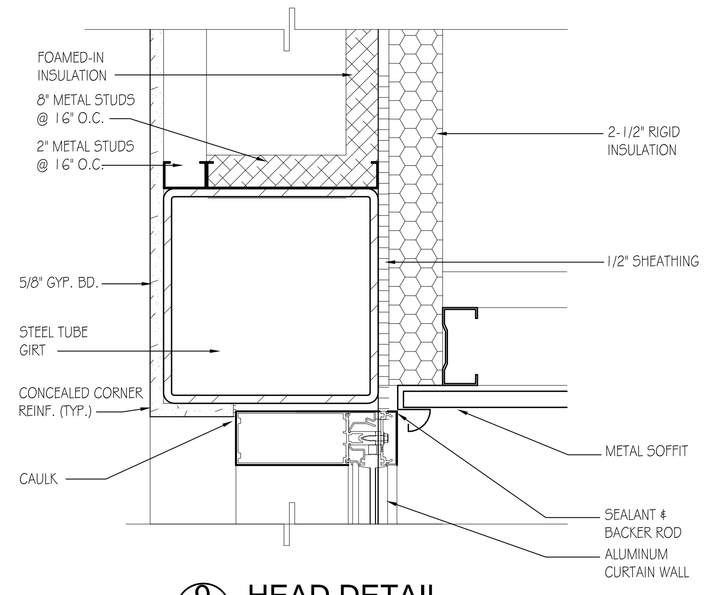

9 A601 HEAD DETAIL
SCALE: 3" = 1'-0"

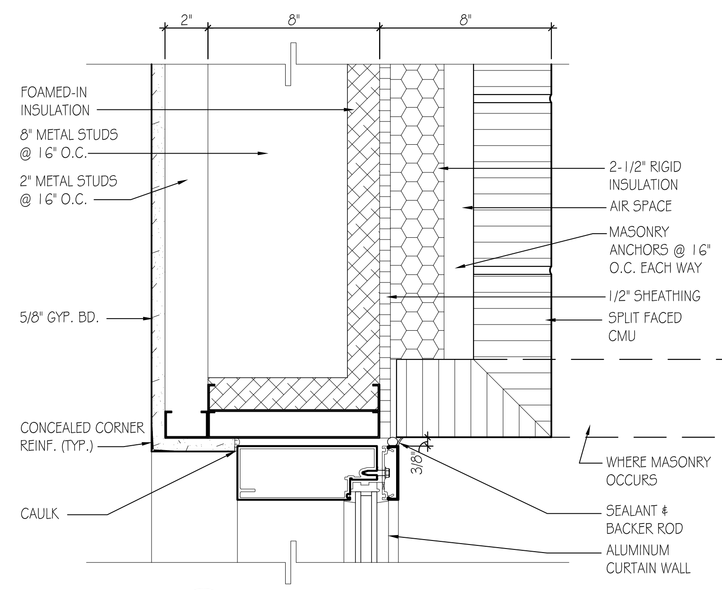

11 A601 JAMB DETAIL
SCALE: 3" = 1'-0"

2 A601 JAMB DETAIL
SCALE: 3" = 1'-0"

NOTE: 3-5/8" METAL STUD WALL = 6" H.M. FRAME REQ.'D
NOTE: 6" METAL STUD WALL = 8 1/2" H.M. FRAME REQ.'D

4 A601 HEAD DETAIL
SCALE: 3" = 1'-0"

NOTE: PROVIDE FLAT PROFILE MARBLE THRESHOLD BETWEEN ADJOINING HARD TILE FLOORS

6 A601 SILL DETAIL
SCALE: 3" = 1'-0"

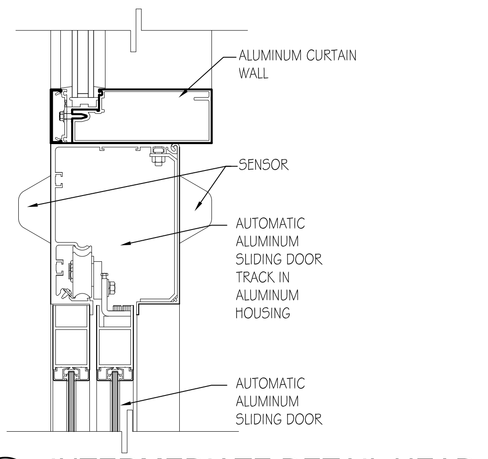

10 A601 INTERMEDIATE DETAIL HEAD
SCALE: 3" = 1'-0"

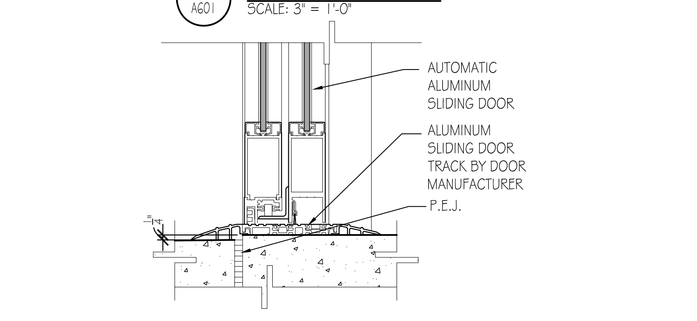

12 A601 SILL DETAIL
SCALE: 3" = 1'-0"

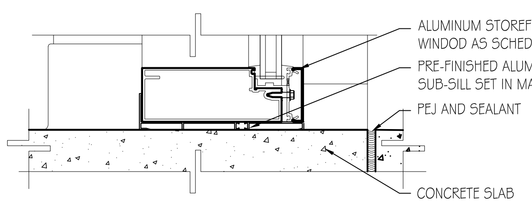

13 A601 SILL DETAIL
SCALE: 3" = 1'-0"

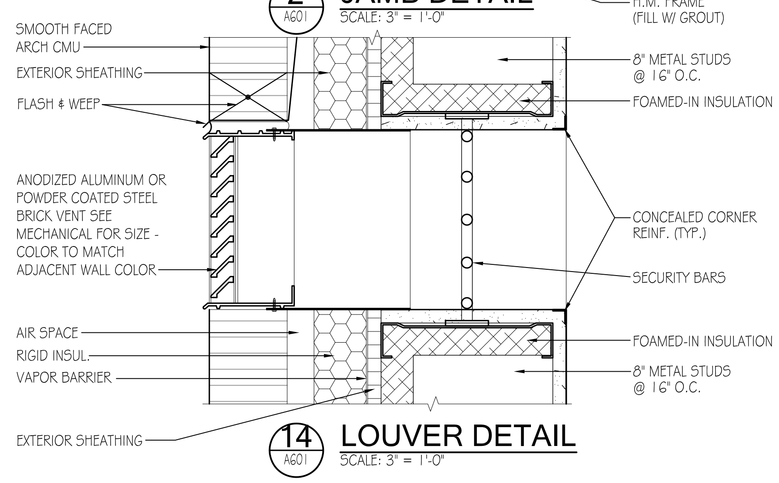

14 A601 LOUVER DETAIL
SCALE: 3" = 1'-0"

SCALE: 3" = 1'-0"
0" 1" 3" 6" 12"
1/2" 2" 4" 9"

AAFES Real Estate Directorate
AAFES (RE-C) P.O.BOX 660320 DALLAS, TX 75266-0320

KEY PLAN:

DATE	REVISION NO. & DESCRIPTION	BY

STATE OF ALABAMA · MONTGOMERY · EDWARD M. BRUMMAL · REGISTERED ARCHITECT
PARSONS WIBLE BRUMMAL ALKIRE / ARCHITECTS INC.
MONTGOMERY, ALABAMA

DESIGN BY:

CHECKED BY: EMB

RECOMMENDED: DATE

APPROVED: DATE

ARMY & AIR FORCE EXCHANGE SERVICE
DEPARTMENTS OF THE ARMY & AIR FORCE

RE-C
REAL ESTATE DIRECTORATE

PROJECT:
TYNDALL AFB
CONSTRUCT SHOPPETTE/ FOOD/CLASS 6/GAS

TYNDALL AFB, FLORIDA

DRAWING TITLE:
DOOR SCHEDULE, DOOR FRAME & CURTAIN WALL TYPES, DOOR DETAILS

DATE:	SCALE:	SHEET:
18 JAN. 2012	AS NOTED	A601

DRAWING PROJECT NO.
0941-09-000003

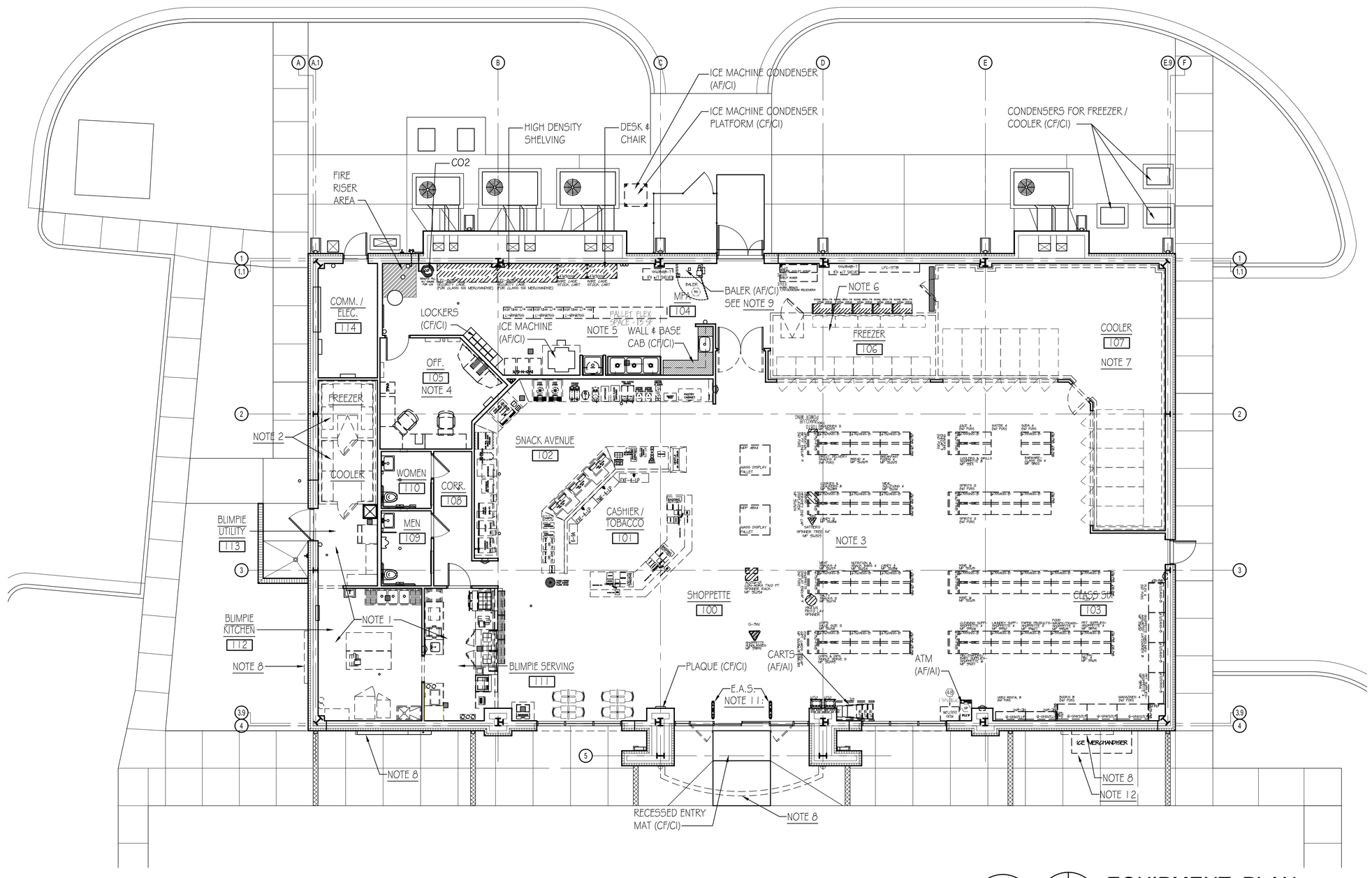

TRUE NORTH

PLAN NORTH

EQUIPMENT PLAN

SCALE: 1/8" = 1'-0"

0' 4' 8' 24'

2' 6' 16'

GENERAL NOTES:

NOTE 1 :
SEE SHEET A402 FOR EQUIPMENT SCHEDULE AND RESPONSIBILITY FOR FURNISHING AND INSTALLING EQUIPMENT IN BLIMPIE SERVING 111, BLIMPIE KITCHEN 112, AND BLIMPIE UTILITY 113.

NOTE 2 :
BLIMPIE FREEZER & COOLER ARE AF/A1. GENERAL CONTRACTOR FURNISHES POWER & J-BOXES FOR UNITS AND PROVIDES HOOK-UP OF POWER TO ALL FREEZER EQUIPMENT REFRIGERANT WORK IS AF/AI. CONTRACTOR FURNISHES & INSTALLS LIGHTS IN THESE UNITS. SPRINKLERS IN FREEZER ARE CF/CI (DRY).

NOTE 3 :
CHECKOUTS, DISPLAYS, GONDOLAS COUNTERS RACKS AND SHELVING IN SHOPPETTE 100, CASHIER / TOBACCO 101, SNACK AVENUE 102, AND CLASS SIX 103 ARE AF/AI. CASH REGISTERS, POINT OF SALE ARE AF/AI. (ELECTRICAL SERVICE IS BY GENERAL CONTRACTOR)

NOTE 4 :
FURNITURE AND EQUIPMENT IN OFFICE 105 TO BE AF/AI.

NOTE 5 :
SHELVING IN MPA 104 IS AF/AI. ICE MACHINE IS AF/CI. CONDENSER UNIT FOR ICE MACHINE IS AF/CI.

NOTE 6 :
WALK-IN FREEZER IS AF/AI. GENERAL CONTRACTOR FURNISHES POWER AND J-BOXES FOR UNIT AND PROVIDES HOOK-UP OF POWER TO ALL FREEZER EQUIPMENT. REFRIGERANT WORK IS AF/AI. CONTRACTOR FURNISHES & INSTALLS LIGHTS IN FREEZER. SPRINKLERS IN FREEZER ARE CF/CI.

NOTE 7 :
WALK-IN COOLER IS AF/AI. GENERAL CONTRACTOR FURNISHES POWER AND J-BOXES FOR UNIT AND PROVIDES HOOK-UP OF POWER TO ALL COOLER EQUIPMENT. REFRIGERANT WORK IS AF/AI. CONTRACTOR FURNISHES & INSTALLS LIGHTS IN COOLER. SPRINKLERS IN COOLER ARE CF/CI.

NOTE 8 :
EXTERIOR BUILDING SIGNS AS INDICATED ON BUILDING ELEVATIONS SHEET A 201 & 202 ARE AF/CI. INCLUDES ALL ELECTRICAL HOOKS-UPS WIRING AND "J" BOXES. BUILDING EXTERIOR SIGNAGE IS SUPPLIED BY AAFES / VENDOR FOR INSTALLATION BY G.C. G.C. IS RESPONSIBLE TO PROVIDE POWER AND "J" BOXES TO SIGN LOCATIONS AND MAKE FINAL POWER HOOK-UPS ON AF/CI SIGNAGE.

NOTE 9:
BALER IS FURNISHED BY AAFES AND SHALL BE UNCRATED AND SETUP BY GENERAL CONTRACTOR INCLUDING POWER AND HOOK-UP OF POWER. VERIFY BALER MODEL NUMBER PTC MODEL #420HD & ITS POWER REQUIREMENTS.

NOTE 10:
SIGNAGE / GRAPHICS PACKAGE FOR FASCIA OF FUEL CANOPY IS AF/CI.

NOTE 11:
THE E.A.S. IS FURNISHED AND INSTALLED BY AAFES. GENERAL CONTRACTOR IS RESPONSIBLE TO PROVIDE POWER IN UNDER FLOOR CONDUIT TO EACH E.A.S. LOCATION INDICATED ON THE PLAN.

NOTE 12:
ICE MERCHANDIZER: FURNISHED AND INSTALLED BY AAFES (AF/AI)

NOTE 13:
INTERIOR WALL MOUNTED SIGNAGE & LOGO PACKAGES ARE AF/AI. CEILING MOUNTED SIGNAGE, BULKHEADS, ETC. ARE AF/CI.

NOTE: SEE SHEET A401 FOR EQUIPMENT SCHEDULE FOR SNACK AVENUE. SEE SHEET A402 FOR EQUIPMENT SCHEDULE FOR BLIMPIES.

AF = AAFES FURNISHED
AI = AAFES INSTALLED
CF = CONTRACTOR FURNISHED
CI = CONTRACTOR INSTALLED

AAFES Real Estate Directorate
AAFES (RE-C) P.O.BOX 660320 DALLAS, TX 75266-0320

KEY PLAN:

DATE	REVISION NO. & DESCRIPTION	BY

STATE OF ALABAMA · MONTGOMERY · EDWARD BRUMMAL ALKIRE · REGISTERED ARCHITECT · ALABAMA

PARSONS WIBLE BRUMMAL ALKIRE / ARCHITECTS INC.
MONTGOMERY, ALABAMA

DESIGN BY:

CHECKED BY: EMB

RECOMMENDED: DATE

APPROVED: DATE

ARMY & AIR FORCE EXCHANGE SERVICE
DEPARTMENTS OF THE ARMY & AIR FORCE

RE-C
REAL ESTATE DIRECTORATE

PROJECT:
TYNDALL AFB
CONSTRUCT SHOPPETTE/ FOOD/CLASS 6/GAS

TYNDALL AFB, FLORIDA

DRAWING TITLE:
EQUIPMENT PLAN

DATE:	SCALE:	SHEET:
18 JAN. 2012	1/8" = 1'-0"	EQ101

DRAWING PROJECT NO.
0941-09-000003

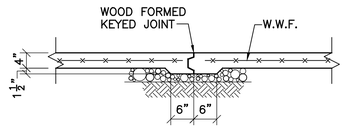

TYPICAL SLAB CONSTRUCTION JOINT DETAIL–(C.J.)

NOTE:
IF SAWED JOINTS ARE USED, JOINTS MUST BE SAWED SAME DAY AS SLAB POUR.

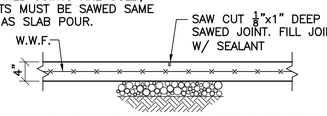

ALTERNATE SLAB CONSTRUCTION JOINT DETAIL (SAWED JOINT)

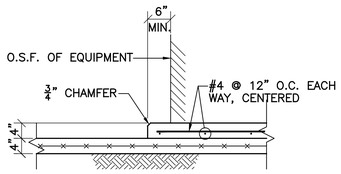

TYPICAL EQUIPMENT PAD DETAIL

METAL BLDG. MFR. NOTE:
PURLINS SHALL BE DESIGNED TO SUPPORT ADDED LOAD OF EQUIPMENT. PROVIDE ADD'L. FRAMING AS REQ'D.

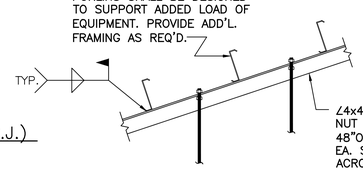

HANGERS SPACED PERPENDICULAR TO PURLINS

METAL BLDG. MFR. NOTE:
PURLINS SHALL BE DESIGNED TO SUPPORT LOAD OF OVERHEAD SUSPENDED EQUIPMENT. PROVIDE ADD'L. FRAMING AS REQ'D.

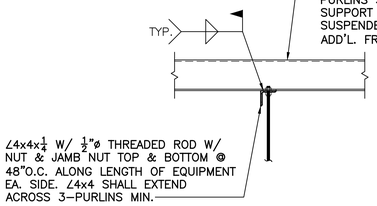

HANGERS SPACED PARALLEL TO PURLINS

TYPICAL EQUIPMENT HANGER DETAIL

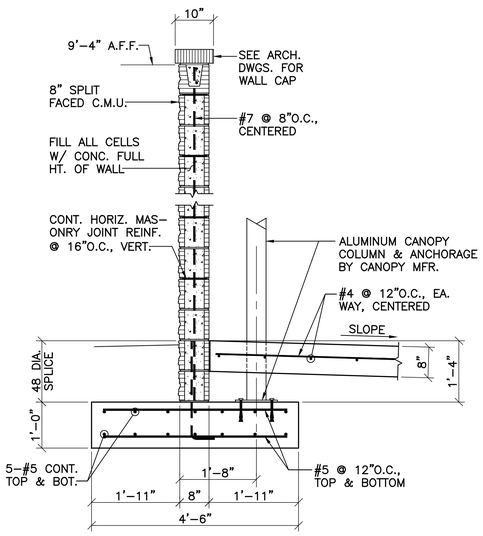

SECTION 1 / 3/4"=1'–0" (S001)

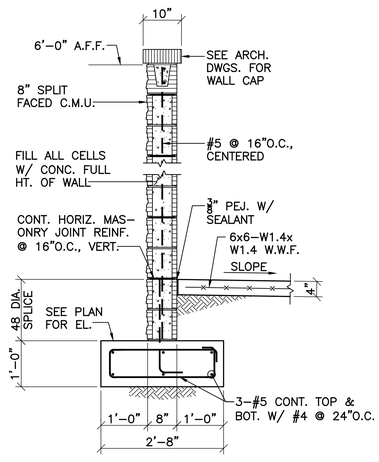

SECTION 2 / 3/4"=1'–0" (S001)

FOOTING SCHEDULE

MARK	SIZE	DEPTH	REINFORCING
(A)	3'–0" x 3'–0"	12"	4–#4 EA. WAY T.&B.
(B)	3'–9" x 3'–9"	12"	5–#4 EA. WAY T.&B.
(C)	4'–9" x 4'–9"	12"	7–#4 EA. WAY T.&B.
(D)	5'–0" x 5'–0"	12"	7–#4 EA. WAY T.&B.
(E)	5'–9" x 5'–9"	12"	7–#4 EA. WAY T.&B.
(F)	4'–0" x 4'–0"	12"	6–#4 EA. WAY T.&B.

LINTEL SCHEDULE

MARK OR LOCATION	MAX. SPAN	TYPE	SIZE	REINFORCEMENT	REMARKS
MASONRY	3'–4"	STEEL ANGLE	∠4x4x¼		BEAR 8" EA. END
MASONRY	6'–4"	STEEL ANGLE	∠6x4x⅜		BEAR 8" EA. END L.L.V.
'C' STUD	3'–4"	2–'C' SECTIONS	2–6"x1⅝"–16GA. 'C' SECTIONS		PROVIDE 1–STUD @ JAMB
'C' STUD	6'–4"	2–'C' SECTIONS	2–8"x1⅝"–16GA. 'C' SECTIONS		PROVIDE 2–STUDS @ JAMB

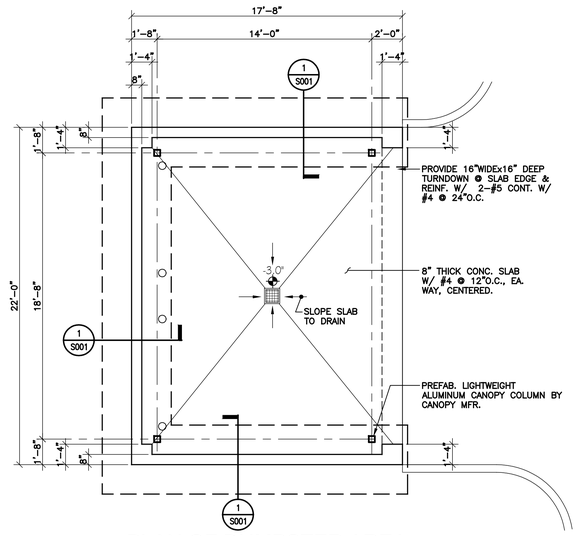

PLAN OF DUMPSTER AREA
SCALE: 1/4" = 1'–0"

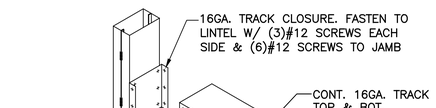

TYPICAL LINTEL DETAIL AT STEEL STUD WALLS

GENERAL NOTES

FOUNDATION:
1. THE BEARING STRATA OF ALL FOOTINGS AND GRADE BEAMS SHALL BE INSPECTED AND APPROVED BY THE SOILS TESTING LABORATORY PRIOR TO PLACING THE REINFORCING STEEL AND CONCRETE.
2. ALL FOOTINGS SHALL BEAR ON AN UNDISTURBED SOIL STRATA OR COMPACTED FILL CAPABLE OF SUSTAINING THE LOADS.
3. FOOTINGS WERE DESIGNED FOR AN ALLOWABLE SOIL BEARING OF P = 2000 PSF.
4. ELEVATIONS SHOWN ON PLAN ARE TOP OF FOOTINGS AND ARE MINIMUM DEPTH. DIFFERENT OR UNUSUAL CONDITIONS SHALL BE REPORTED TO THE ARCHITECT AND/OR ENGINEER.
5. ALL FOOTING REINFORCEMENT SHALL BE HELD SECURELY FROM THE GROUND. CONCRETE BLOCK AND BROKEN TILE SHALL NOT BE USED. CONCRETE OR CLAY BRICK MAY BE USED.
6. DOWEL ALL FOOTINGS AND WALLS WHERE THEY ABUT WITH SAME STEEL AS VERTICAL.
7. PROVIDE PREFORMED EXPANSION JOINT WHERE SHOWN.
8. IN FOOTINGS PROVIDE CORNER BARS AT ALL EXTERIOR BUILDING CORNERS.
9. DO NOT BACK FILL BEHIND FOUNDATION WALLS UNTIL TOP AND BOTTOM SLABS HAVE BEEN POURED AND ATTAINED THEIR DESIGN STRENGTHS.

CONCRETE:
1. ALL CONCRETE SHALL HAVE A COMPRESSIVE STRENGTH AT 28 DAYS OF F'c = 3000 PSI AND A MAXIMUM WATER–CEMENT RATIO OF 0.53. ALL CONCRETE FOR EXTERIOR APPLICATIONS SHALL CONTAIN ENTRAINED AIR.
2. REINFORCING STEEL SHALL CONFORM TO ASTM A615 GRADE 60.
3. WELDED WIRE FABRIC SHALL CONFORM TO ASTM A185.
4. UNLESS NOTED OTHERWISE PROTECTIVE COVERING OF REINFORCEMENT SHALL BE AS FOLLOWS (SEE DETAILS) : FOOTINGS AND GRADE BEAMS 3" CLEAR BOTTOM AND SIDES, 1 1/2" CLEAR TOP. CONCRETE SLABS 3/4" CLEAR.
5. LAP ALL CONTINUOUS BARS WITH CLASS A SPLICES UNLESS OTHERWISE NOTED.
6. PLACING PLANS AND DETAILS SHALL BE IN ACCORDANCE WITH THE LATEST "A.C.I. DETAILING MANUAL".
7. STEEL FABRICATOR SHALL SUBMIT SHOP DRAWINGS FOR THE ARCHITECT AND/OR ENGINEER'S REVIEW.

STRUCTURAL STEEL:
1. ALL STRUCTURAL STEEL W AND WT SHAPES SHALL CONFORM TO ASTM A992 (GRADE 50). OTHER SHAPES SHALL CONFORM TO ASTM, A36, LATEST EDITION (EXCEPT STEEL JOISTS AND TUBE SECTIONS).
2. STEEL FABRICATOR SHALL SUBMIT SHOP DRAWINGS FOR THE ARCHITECT AND/OR ENGINEER'S REVIEW.
3. THE CONTRACTOR SHALL VERIFY ALL SHOP DRAWINGS DIMENSIONS WITH STRUCTURAL AND ARCHITECTURAL PLANS AND DETAILS.
4. STRUCTURAL STEEL TUBE SECTIONS SHALL CONFORM TO ASTM A500, GRADE B, Fy = 46.0 KSI.
5. BOLTED CONNECTIONS SHALL BE MADE WITH HIGH STRENGTH BOLTS CONFORMING TO ASTM A325. USE 3/4 INCH DIAMETER MINIMUM. UNLESS NOTED OTHERWISE, ALL BOLTS SHALL BE TIGHTENED AS FULLY TENSIONED BEARING CONNECTIONS.
6. CONNECTIONS NOT SHOWN ON DRAWINGS SHALL BE DESIGNED BY THE FABRICATOR. WHERE POSSIBLE USE DOUBLE ANGLE CONNECTIONS. USE MAXIMUM NUMBER OF BOLTS FOR DEPTH OF BEAM WITH SINGLE ROW OF BOLTS. WHERE DOUBLE ANGLE CONNECTIONS ARE NOT POSSIBLE, FABRICATOR SHALL DESIGN CONNECTION FOR CAPACITY EQUIVALENT TO DBL–ANGLE CONNECTION WITH MAX NO. BOLTS UNLESS DETAILED OTHERWISE.

PRE–ENGINEERED METAL BUILDING:
1. THE COMPLETE DESIGN OF METAL BUILDING INCLUDING ALL COMPONENTS SHOWN OR NOT SHOWN ON THE DRAWINGS SHALL BE ACCOMPLISHED BY THE BUILDING MANUFACTURER.
2. THE DESIGN SHALL BE MADE BY A REGISTERED ENGINEER, REGISTERED IN THE STATE OF FLORIDA AND HE SHALL AFFIX HIS REGISTRATION NUMBER TO ALL SHOP DRAWINGS AND CALCULATIONS.
3. THE BUILDING AND ALL OF ITS COMPONENTS SHALL BE DESIGNED FOR THE FOLLOWING DEAD AND LIVE LOADS:
   a.) ACTUAL WEIGHT OF STEEL STRUCTURE.
   b.) 10 PSF DEAD (COLLATERAL) LOAD IN ADDITION TO ACTUAL WEIGHT OF STRUCTURE AND ROOFING MATERIALS.
   c.) 20 PSF ROOF LIVE LOAD.
   d.) ANY ADDITIONAL LOADS AND REACTIONS THAT ARE SHOWN ON THE DRAWINGS.
   e.) WIND LOADING AS REQUIRED BY INTERNATIONAL BUILDING CODE.
4. NO LIVE LOAD REDUCTION SHALL BE TAKEN FOR THE DESIGN OF THE RIGID FRAMES.
5. WHERE MEMBER SIZES AND GAGES ARE SHOWN THEY SHALL BE CONSIDERED A MINIMUM SIZE. THE MANUFACTURER SHALL NOT USE SMALLER SIZE OR LIGHTER GAGES, OR OMIT FRAMING WHERE INDICATED. HE SHALL USE ONLY LARGER SIZE AND HEAVIER GAGES IF HIS DESIGN INDICATES THESE ARE REQUIRED TO MEET THE LOADING CRITERIA
6. THE DEFLECTION OF GIRTS SHALL BE LIMITED TO 1/240 OF THE SPAN AND DEFLECTION OF PURLINS SHALL BE LIMITED TO 1/240 OF THE SPAN. DEFLECTION OF RIGID FRAMES SHALL BE LIMITED TO 1/240 OF THE SPAN. DEFLECTIONS SHALL BE BASED ON TOTAL LOAD (DEAD PLUS LIVE LOADS). TOTAL RIGID FRAME DRIFT SHALL BE LIMITED TO H/240, WHERE H IS EQUAL TO THE EAVE HEIGHT.
7. COLUMN BASES SHALL BE DESIGNED AS PINNED CONNECTIONS. MOMENTS AT COLUMN BASE PLATES ARE NOT ACCEPTABLE.

CODES:
ALL PARTS SHALL BE FURNISHED AND ERECTED ACCORDING TO THE APPLICABLE CODES AND SPECIFICATIONS OF THE FOLLOWING:
AMERICAN CONCRETE INSTITUTE (ACI)
AMERICAN INSTITUTE OF STEEL CONSTRUCTION (AISC)
AMERICAN WELDING SOCIETY (AWS)
OSHA STEEL ERECTION STANDARD (OSHA)
INTERNATIONAL BUILDING CODE (IBC 2009) (ICC)

DESIGN LIVE LOADS:
ROOF.....20 PSF.
OCCUPANCY CATEGORY (PER IBC 2009/ASCE 7–05).....II
WIND.....INTERNATIONAL BUILDING CODE (PER ASCE 7–05)
BASIC WIND SPEED.....135 MPH
WIND IMPORTANCE FACTOR.....1.00
WIND EXPOSURE.....C
INTERNAL PRESSURE COEFFICIENTS.....+/–0.18
SEISMIC....INTERNATIONAL BUILDING CODE (PER ASCE 7–05)
SEISMIC IMPORTANCE FACTOR.....Ie=1.25
MAPPED SPECTRAL ACCELERATION (SHORT–TERM).Ss=15%
MAPPED SPECTRAL ACCELERATION (1–SECOND)...S1=7%
SITE CLASS.....D
SHORT–PERIOD SPECTRAL RESPONSE ACCEL.....Sds=.16g
1–SECOND SPECTRAL RESPONSE ACCEL.....Sd1=.11g
SEISMIC DESIGN CATEGORY.....B
SEISMIC FORCE–RESISTING SYSTEM.....PRE–ENGINEERED METAL BUILDING
DESIGN BASE SHEAR (ULTIMATE).....17.0k
SEISMIC RESPONSE COEFFICIENT.....Cs=0.10
RESPONSE MODIFICATION FACTOR.....R=2
ANALYSIS PROCEDURE.....ASCE 7 (SECT 12.8)
SNOW.....INTERNATIONAL BUILDING CODE
GROUND SNOW LOAD.....Pg=5 PSF

WIND REQUIREMENTS FOR SPECIAL INSPECTIONS:
1. THE FOLLOWING STRUCTURAL COMPONENTS ARE DESIGNATED AS WIND SYSTEMS AND/OR PART OF THE MAIN WINDFORCE–RESISTING SYSTEM OF THE BUILDING AND ARE SUBJECT TO THE REQUIREMENTS OF SECTION 1705.4 OF IBC 2009 AND PROJECT SPECIFICATIONS:
   PRE–ENGINEERED METAL BUILDING FRAME
   THESE SPECIFIC COMPONENTS ARE IN ADDTION TO ALL GENERAL COMPONENTS LISTED IN SECTION 1705.4.2 OF IBC 2009 AND ARE SUBJECT TO ALL SPECIAL INSPECTIONS AND TESTING AS REQUIRED BY CHAPTER 17 OF IBC 2009, PROJECT SPECIFICATIONS, AND SCHEDULE OF SPECIAL INSPECTIONS. SPECIAL INSPECTION REPORTS SHALL BE SUBMITTED AS PER THE STATEMENT OF SPECIAL INSPECTIONS.
2. OTHER ARCHITECTURAL COMPONENTS AND THEIR ANCHORAGES MAY ALSO BE DESIGNATED AS WIND–RESISTING COMPONENTS. SEE OTHER DISCIPLINE'S DRAWINGS AND SPECIFICATIONS.

AAFES
Real Estate Directorate
AAFES (RE–C) P.O.BOX 660320 DALLAS, TX 75266–0320

KEY PLAN:

[redacted]

DATE	REVISION NO. & DESCRIPTION	BY

ALABAMA
NO. 9165
PROFESSIONAL
ENGINEER
REGISTERED
2012

PARSONS WIBLE BRUMMAL ALKIRE / ARCHITECTS INC.
MONTGOMERY, ALABAMA

DESIGN BY:
CHECKED BY:
RECOMMENDED: DATE
APPROVED: DATE

[redacted]

ARMY & AIR FORCE EXCHANGE SERVICE
DEPARTMENTS OF THE ARMY & AIR FORCE

RE–C
REAL ESTATE DIRECTORATE

[redacted]

PROJECT:
TYNDALL AFB
CONSTRUCT SHOPPETTE/ FOOD/CLASS6/GAS

TYNDALL, AFB
FLORIDA

DRAWING TITLE:
GENERAL NOTES
SCHEDULES
TYPICAL DETAILS

DATE:	SCALE:	SHEET:
18 JAN. 2012		S001
DRAWING PROJECT NO. 0941–09–000003		

[redacted]

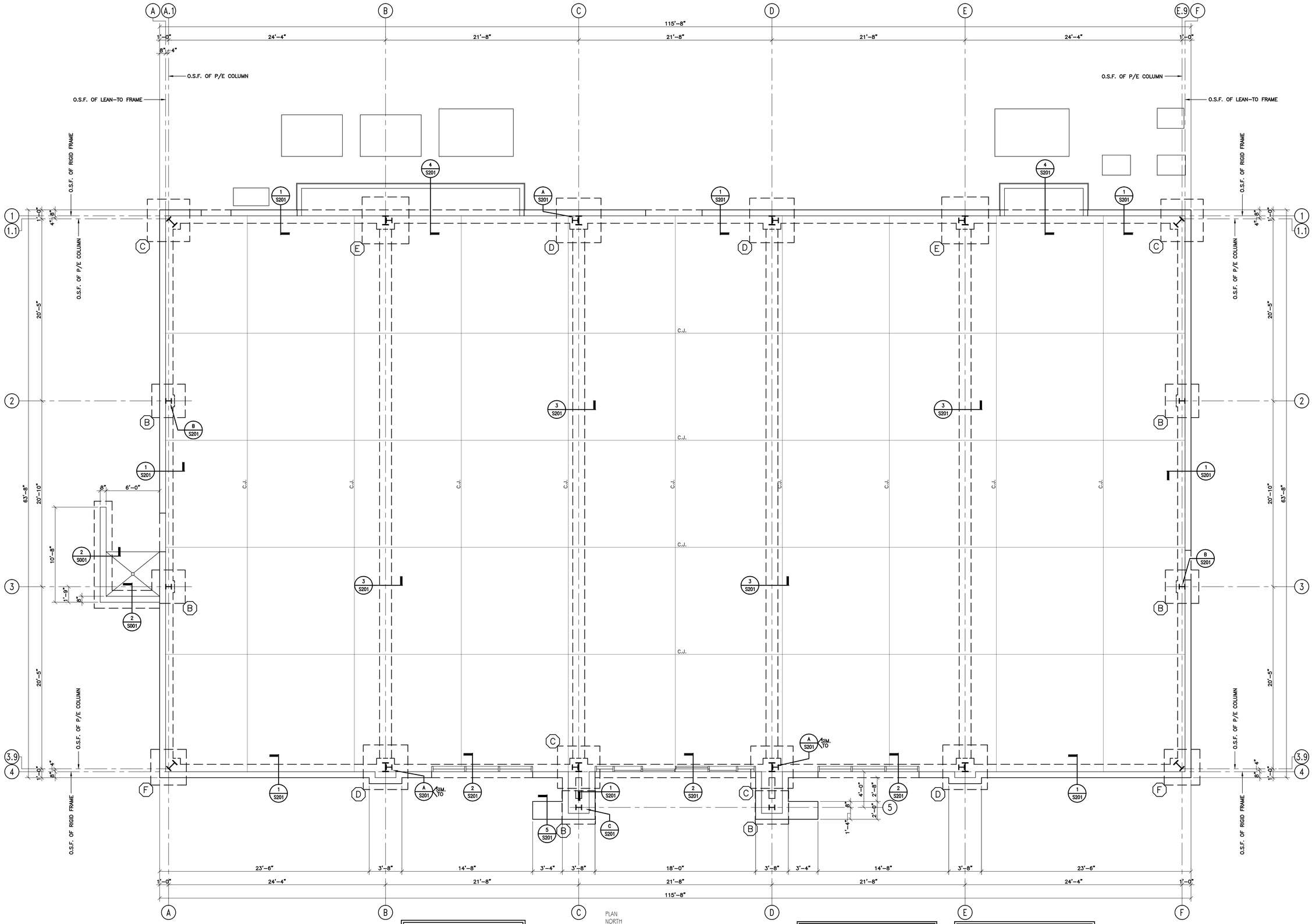

NOTE:
SEE ARCH. DWGS. FOR DUMPSTER PAD LOCATIONS & DIMENSIONS. SEE SHEET S001 FOR TYPICAL DUMPSTER PAD SCREEN WALL SECTION.

NOTE:
IF SAWED JOINTS ARE USED, JOINTS MUST BE SAWED SAME DAY AS SLAB POUR. SEE SHEET S001 FOR ALTERNATE SLAB CONSTRUCTION JOINT DETAIL.

TRUE NORTH

PLAN NORTH

FOUNDATION PLAN

SCALE: 1/4" = 1'-0"

0' 2' 4' 2'
6' 2' 8'

FLOOR CONSTRUCTION
4" THICK CONCRETE SLAB W/ 6x6-W1.4xW1.4 W.W.F. OVER VAPOR BARRIER OVER 4" POROUS FILL.
FIN. FLOOR EL. 33'-6"

NOTE:
UNLESS SHOWN OTHERWISE ON PLAN, TOP OF FOOTING EL.=30'-10"

AAFES
Real Estate Directorate
AAFES (RE-C) P.O.BOX 660320 DALLAS, TX 75266-0320

KEY PLAN:

[redacted]

DATE	REVISION NO. & DESCRIPTION	BY

ALABAMA
NO. 9165
PROFESSIONAL ENGINEER
LYNN D. PARSONS
1-18-2012

PARSONS WIBLE BRUMMAL ALKIRE / ARCHITECTS INC.
MONTGOMERY, ALABAMA

DESIGN BY:
CHECKED BY:
RECOMMENDED: DATE
APPROVED: DATE

[redacted]

ARMY & AIR FORCE EXCHANGE SERVICE
DEPARTMENTS OF THE ARMY & AIR FORCE

RE-C
REAL ESTATE DIRECTORATE

[redacted]

PROJECT:
TYNDALL AFB
CONSTRUCT SHOPPETTE/ FOOD/CLASS6/GAS

TYNDALL, AFB
FLORIDA

DRAWING TITLE:
FOUNDATION PLAN

DATE:	SCALE:	SHEET:
18 JAN. 2012		S101

DRAWING PROJECT NO.
0941-09-000003

[redacted]

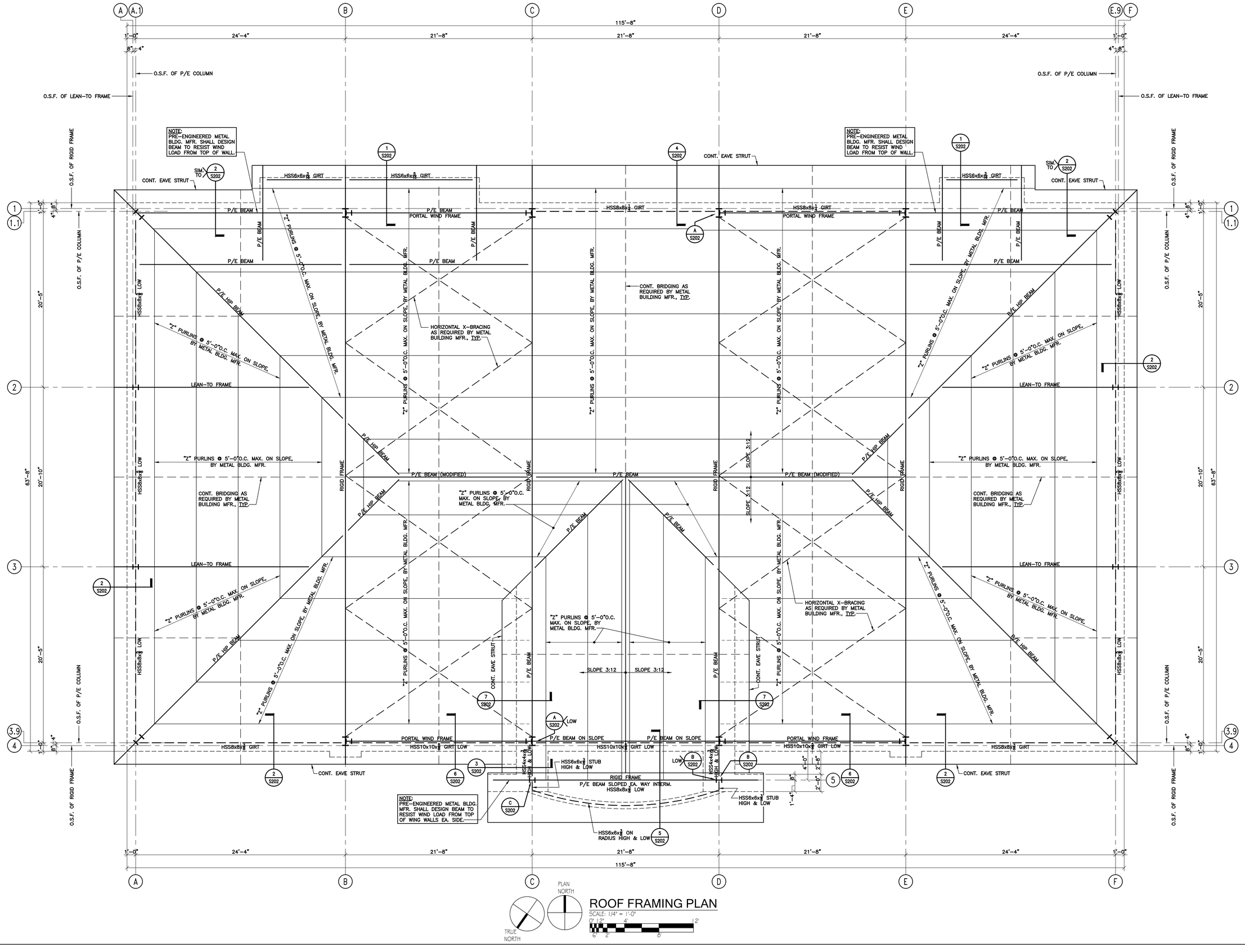

PLAN NORTH

TRUE NORTH

ROOF FRAMING PLAN

SCALE: 1/4" = 1'-0"

0" 12" 4' 12'

6" 2' 6'

AAFES
Real Estate Directorate
AAFES (RE-C) P.O.BOX 660320 DALLAS, TX 75266-0320

KEY PLAN:

[redacted]

DATE	REVISION NO. & DESCRIPTION	BY

ALABAMA
NO. 9165
PROFESSIONAL
ENGINEER
DEC 18 2012

PARSONS WIBLE BRUMMAL ALKIRE / ARCHITECTS INC.
MONTGOMERY, ALABAMA

DESIGN BY:

CHECKED BY:

RECOMMENDED: DATE

APPROVED: DATE

[redacted]

ARMY & AIR FORCE EXCHANGE SERVICE
DEPARTMENTS OF THE ARMY & AIR FORCE

RE-C
REAL ESTATE DIRECTORATE

[redacted]

PROJECT:
TYNDALL AFB
CONSTRUCT SHOPPETTE/ FOOD/CLASS6/GAS

TYNDALL, AFB
FLORIDA

DRAWING TITLE:
ROOF FRAMING PLAN

DATE: 18 JAN. 2012
SCALE:
SHEET: S102

DRAWING PROJECT NO.
0941-09-000003

[redacted]

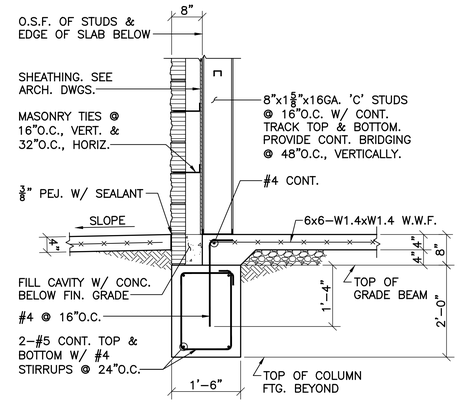

SECTION 1 / 3/4"=1'–0" / S201

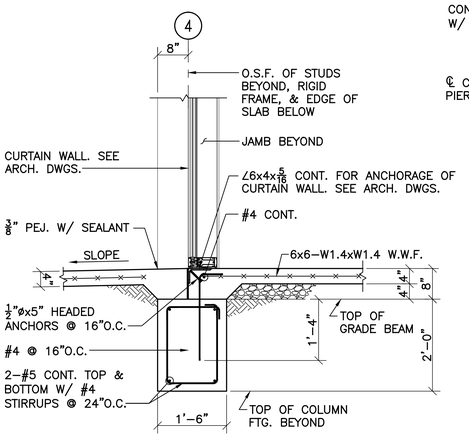

SECTION 2 / 3/4"=1'–0" / S201

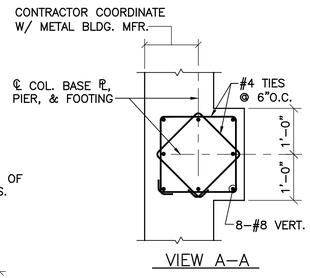

VIEW A–A

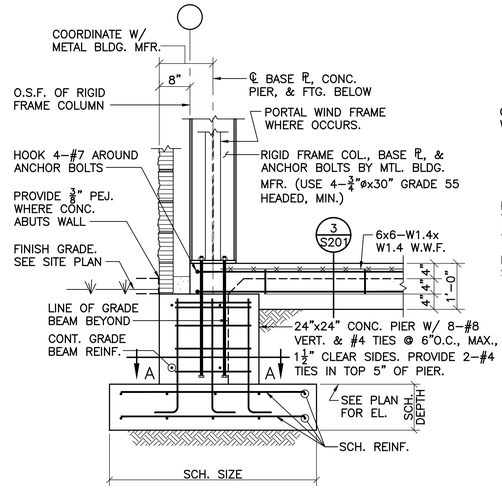

DETAIL A / 3/4"=1'–0" / S201

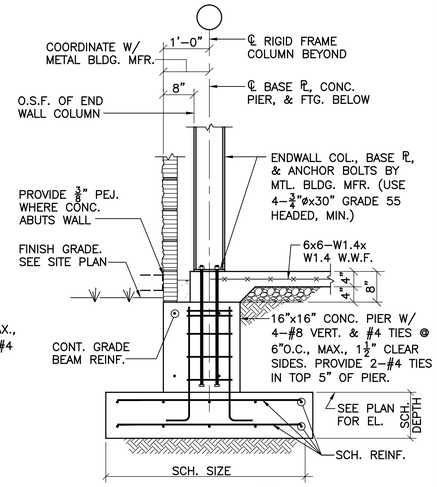

DETAIL B / 3/4"=1'–0" / S201

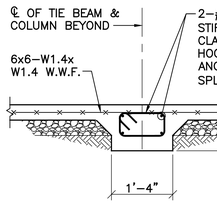

SECTION 3 / 3/4"=1'–0" / S201

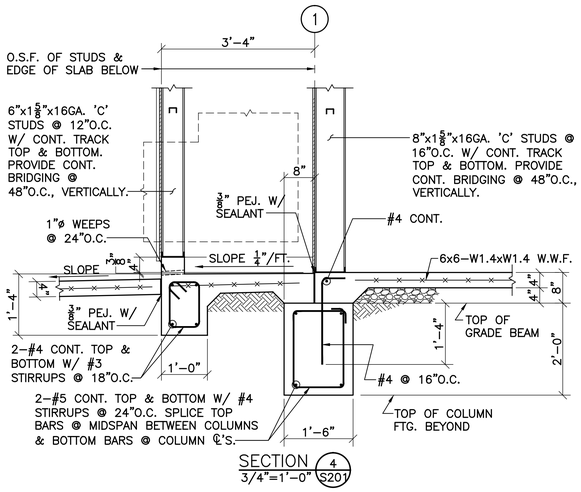

SECTION 4 / 3/4"=1'–0" / S201

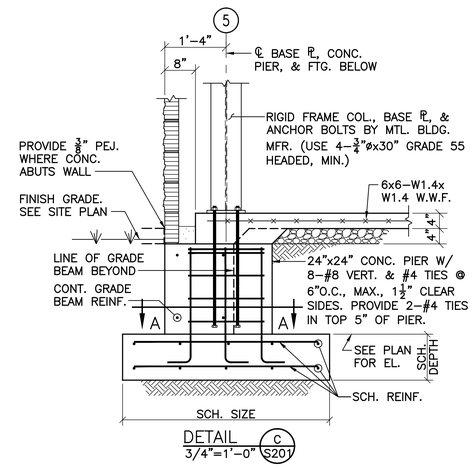

DETAIL C / 3/4"=1'–0" / S201

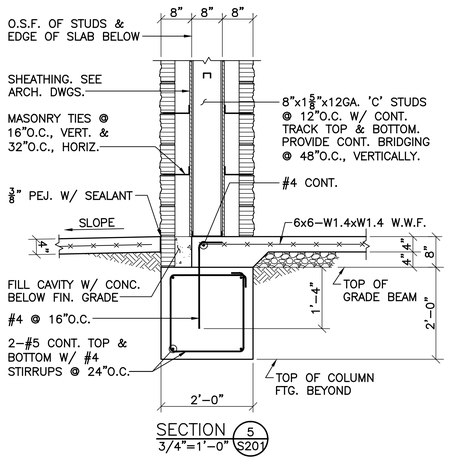

SECTION 5 / 3/4"=1'–0" / S201

AAFES Real Estate Directorate

AAFES (RE–C) P.O.BOX 660320 DALLAS, TX 75266–0320

KEY PLAN:

[redacted]

DATE	REVISION NO. & DESCRIPTION	BY

ALABAMA
NO. 9165
PROFESSIONAL
ENGINEER
LYNN D. BLACK
6-18-2012

PARSONS WIBLE BRUMMAL ALKIRE / ARCHITECTS INC.
MONTGOMERY, ALABAMA

DESIGN BY:

CHECKED BY:

RECOMMENDED: DATE

APPROVED: DATE

[redacted]

ARMY & AIR FORCE EXCHANGE SERVICE
DEPARTMENTS OF THE ARMY & AIR FORCE

RE-C
REAL ESTATE DIRECTORATE

[redacted]

PROJECT:
TYNDALL AFB
CONSTRUCT SHOPPETTE/ FOOD/CLASS6/GAS

TYNDALL, AFB
FLORIDA

DRAWING TITLE:
SECTIONS AND DETAILS

DATE: 18 JAN. 2012
SCALE:
SHEET: S201

DRAWING PROJECT NO.
0941–09–000003

[redacted]

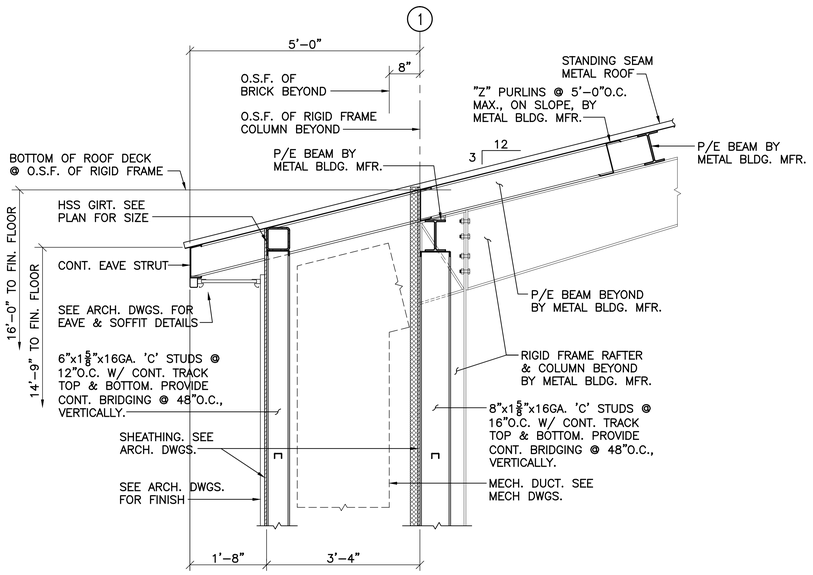

SECTION 1 / 3/4"=1'-0" / S202

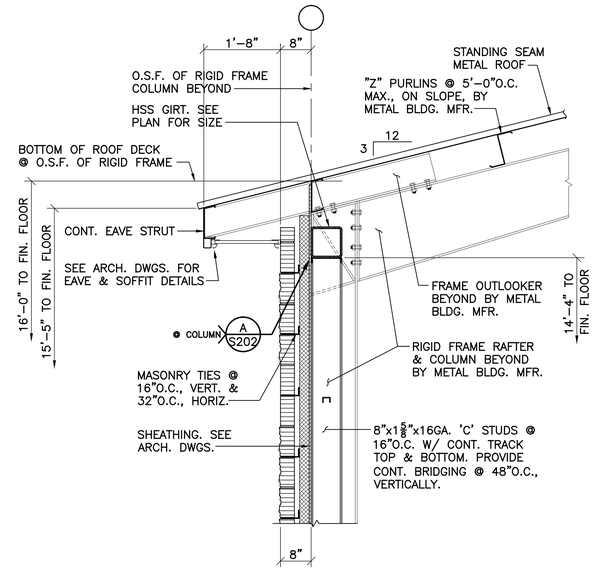

SECTION 2 / 3/4"=1'-0" / S202

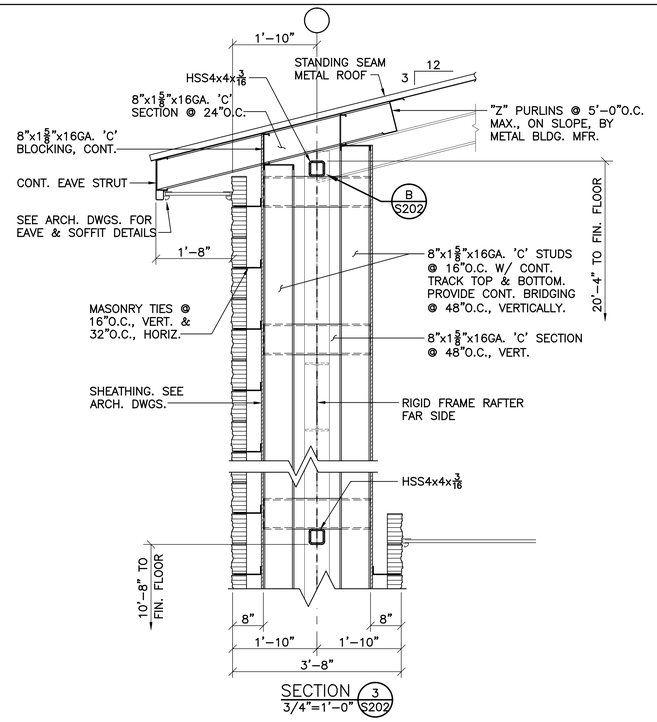

SECTION 3 / 3/4"=1'-0" / S202

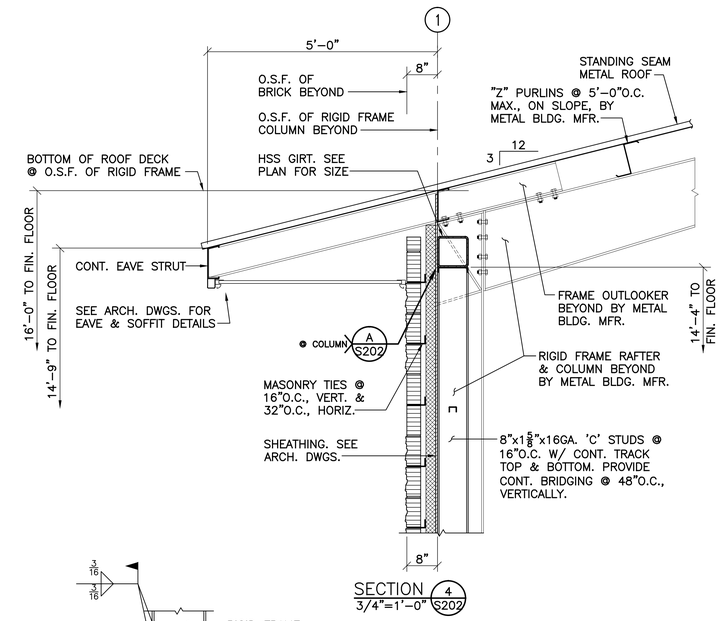

SECTION 4 / 3/4"=1'-0" / S202

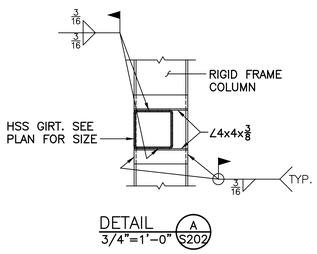

DETAIL A / 3/4"=1'-0" / S202

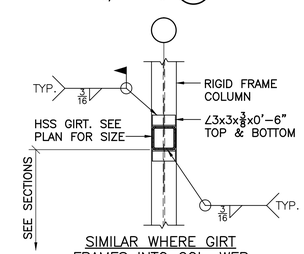

SIMILAR WHERE GIRT FRAMES INTO COL. WEB

DETAIL B / 3/4"=1'-0" / S202

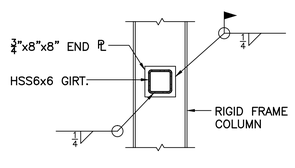

DETAIL C / 3/4"=1'-0" / S202

SECTION 5 / 3/4"=1'-0" / S202

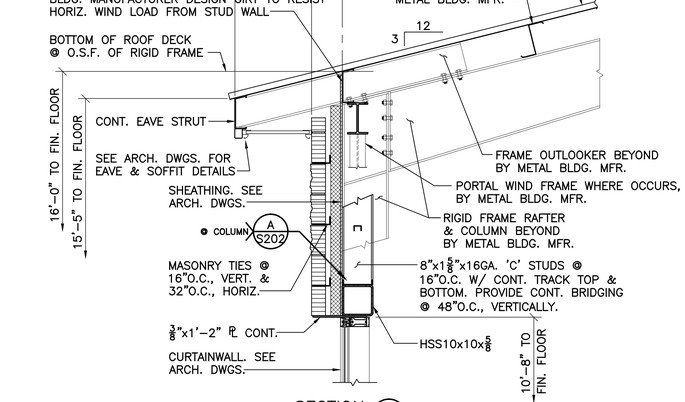

SECTION 6 / 3/4"=1'-0" / S202

SECTION 7 / 3/4"=1'-0" / S202

AAFES Real Estate Directorate

AAFES (RE-C) P.O.BOX 660320 DALLAS, TX 75266-0320

KEY PLAN:

[redacted]

DATE	REVISION NO. & DESCRIPTION	BY

ALABAMA
NO. 9165
PROFESSIONAL
ENGINEER
LYNN D. PARSONS, JR.
10-31-2012

PARSONS WIBLE BRUMMAL ALKIRE / ARCHITECTS INC.
MONTGOMERY, ALABAMA

DESIGN BY:
CHECKED BY:
RECOMMENDED: DATE
APPROVED: DATE

[redacted]

ARMY & AIR FORCE EXCHANGE SERVICE
DEPARTMENTS OF THE ARMY & AIR FORCE

RE-C
REAL ESTATE DIRECTORATE

[redacted]

PROJECT:
TYNDALL AFB
CONSTRUCT SHOPPETTE/ FOOD/CLASS6/GAS

TYNDALL, AFB
FLORIDA

DRAWING TITLE:
SECTIONS AND DETAILS

DATE:	SCALE:	SHEET:
18 JAN. 2012		S202

DRAWING PROJECT NO.
0941-09-000003

[redacted]

GENERAL NOTES

1. CONTRACTOR SHALL VERIFY LOCATION, SIZE AND ELEVATION OF ALL PIPING PROVIDED BY CIVIL PRIOR TO INSTALLING ALL NEW PIPE.
2. ALL OUTSIDE CLEANOUTS SHALL BE BROUGHT TO GRADE AND EMBEDDED IN 18"X18"X6" THICK CONCRETE PAD. (J.R. SMITH 4258 OR EQUAL.)
3. WHEREVER DISSIMILAR METALS ARE CONNECTED ON WATER LINES, A DIELECTRIC UNION SHALL BE USED.
4. ALL HORIZONTAL WATER, FIRE, AND VENT PIPING IS RUN ABOVE CEILING ON PLAN WHICH SHOWN UNLESS OTHERWISE NOTED.
5. ALL HORIZONTAL SANITARY PIPING IS RUN BELOW FLOOR ON PLAN WHICH SHOWN UNLESS OTHERWISE NOTED.
6. ALL WATER PIPING BELOW SLAB ON GRADE SHALL BE TURNED UP AT ENDS SO THAT NO JOINTS OCCUR BELOW FLOOR.
7. COORDINATE ALL PIPE ROUTING TO AVOID CONFLICTS WITH, STRUCTURAL, MECHANICAL, AND ELECTRICAL FEATURES OF BUILDING.
8. ALL WALL HYDRANTS SHALL BE MOUNTED 24" ABOVE FINISH GRADE OR FINISH FLOOR UNLESS OTHERWISE NOTED.
9. ALL WATER PIPING INSTALLED IN EXTERIOR WALLS SHALL BE LOCATED ON THE INTERIOR SIDE OF THE EXTERIOR WALL INSULATION.
10. ALL NON-POTABLE COLD WATER PIPING AND INSULATION SHALL BE PAINTED WITH TWO COATS OF BRIGHT YELLOW PAINT BY THIS SECTION.
11. PAVEMENT CUTS, BACKFILLING AND PATCHES SHALL MEET ALL APPLICABLE REQUIREMENTS.
12. 18" HIGH AIR CHAMBERS SHALL BE PROVIDED ON HOT AND COLD WATER CONNECTION AT EACH FIXTURE OR EQUIPMENT.
13. ALL WORK SHALL COMPLY WITH ALL APPLICABLE AIR FORCE NFPA, STATE, COUNTY, AND LOCAL LAWS AND ORDINANCES.

SPRINKLER NOTES:

1. PROVIDE A NFPA 13 AND UFC 3-600-01 COMPLIANT SYSTEM TO PROVIDE TOTAL COVERAGE FOR THE ENTIRE BUILDING AS INDICATED ON DRAWINGS.
2. ALL PIPING 2" AND SMALLER SHALL BE SCHEDULE 40 STEEL WITH THREADED JOINTS AND CAST IRON OR MALLEABLE IRON FITTINGS. PROVIDE HANGERS PER NFPA 13 SPACING.
3. PIPING LARGER 2" MAY BE SCHEDULE 40 PIPE WITH ROLL GROVED JOINTS. HANGER SPACING TO BE PER NFPA 13 REQUIREMENTS.
4. SPRINKLER HEADS SHALL BE QUICK RESPONSE, GLASS BULB EQUAL TO VIKING MODEL M.

PLUMBING LEGEND

————	SOIL OR WASTE LINE	ⓞ FD	FLOOR DRAIN
– – – – – –	VENT LINE	ⓞ MFD	MECHANICAL FLOOR DRAIN
——·——·——	COLD WATER LINE	ⓞ FS#1	FLOOR SINK #1
——···——	HOT WATER RETURN LINE	ⓞ CWD	CAN WASH DRAIN
——140°——	140° HOT WATER LINE	AFF	ABOVE FINISH FLOOR
——F——	FIRE LINE	CO	CLEAN OUT
——?——	NON-POTABLE COLD WATER LINE	WS	WASTE STACK
	OS&Y GATE VALVE	SS	SOIL STACK
	BALL VALVE	VS	VENT STACK
	UNION	VSTR	VENT STACK THRU ROOF
	PIPE TURNING UP	CW	COLD WATER
	PIPE TURNING DOWN	HW	HOT WATER
	P TRAP	HWR	HOT WATER RETURN
#	RISER DIAGRAM NUMBER	UR	URINAL
WH	WALL HYDRANT	WC	WATER CLOSET
SV#FS	SUPERVISED VALVE & FLOW SWITCH	LAV	LAVATORY
AAV	AIR ADMITTANCE VALVE	NPCW	NON-POTABLE COLD WATER
TP	TRAP PRIMER	P-#	PLUMBING FIXTURE NUMBER
—— GW ——	GREASE WASTE LINE	—— FW ——	FILTERED WATER LINE

NATURAL GAS WATER HEATER SCHEDULE

MARK	LOCHINVAR MODEL #	LOCATION	GAS	GAL.	VENT	RECOVERY (GPH)	TOTAL AVAILABLE 1ST HOUR
GWH-1	SNR200-199	MECH.	199 CFH	93	3"	233	307 GAL.

PLUMBING FIXTURE CONNECTION SCHEDULE

MARK	FIXTURE	WASTE	CW	HW	REMARKS
P-1	WATER CLOSET (ADA)	4"	1"	---	FLOOR MOUNTED FLUSH VALVE, TOP OF SEAT 17"-19" A.F.F., 1.28 GPF
P-2	LAVATORY (ADA)	1 1/4"	1/2"	1/2"	SET RIM 34" A.F.F., .5 GPM
P-3	URINAL (ADA)	2"	---	---	WALL MOUNTED; SET LIP 17" A.F.F., WATERLESS URINAL
P-4	3 COMPARTMENT SINK	4" FS	1/2"	1/2"	PIPE DRAIN TO FLOOR SINK. ROUGH AND CONNECT COMPLETE.
P-5	HAND WASH SINK	1 1/2"	1/2"	1/2"	WALL HUNG
P-6	JANITOR'S SINK	3"	1/2"	1/2"	FLOOR MOUNTED W/ DEEP SEAL TRAP
P-7	ICE MACHINE	3" FS	1/2"	---	FURNISHED BY OTHERS; ROUGH & CONNECT COMPLETE
P-8	HOT & COLD WATER HYDRANT	4" CWD	1/2"	1/2"	ROUGH AND CONNECT COMPLETE

BLIMPIE FOOD SERVICE EQUIPMENT CONNECTION SCHEDULE

MARK	FIXTURE	CW	HW	WASTE	REMARKS
18	24" BACK CABINET W/ SINK	1/2"	1/2"	2"	FURNISHED BY OTHERS; PROVIDE MCGUIRE 165 SUPPLY / STOPS AND 8812 P-TRAP; ROUGH & CONNECT COMPLETE
69	3 COMP. SINK	---	---	INDIRECT	FURNISHED BY OTHERS; EXTEND DRAIN TO FLOOR SINK; ROUGH & CONNECT COMPLETE
73	3 COMP. SINK FAUCET	1/2"	1/2"	---	FURNISHED BY OTHERS; PROVIDE BALL VALVE STOP ON H#CW SUPPLY; ROUGH & CONNECT COMPLETE
74	MOP SINK	---	---	3"	FURNISHED BY OTHERS; FLOOR MOUNTED W/ DEAP SEAL TRAP; ROUGH & CONNECT COMPLETE
75	MOP SINK FAUCET	1/2"	1/2"	---	FURNISHED BY OTHERS; ROUGH & CONNECT COMPLETE
76	WALL MOUNTED HAND SINK	1/2"	1/2"	1 1/2"	FURNISHED BY OTHERS; PROVIDE MCGUIRE 165 SUPPLY/STOPS AND 8812 P-TRAP; ROUGH & CONNECT COMPLETE
72	SINGLE COMPARTMENT SINK	1/2"	1/2"	1 1/2"	FURNISHED BY OTHERS; PROVIDE MCGUIRE 165 SUPPLY / STOPS AND 8812 P-TRAP; ROUGH & CONNECT COMPLETE
54	PEPSI DISPENSER	1/2"	---	INDIRECT	FURNISHED BY OTHERS; PROVIDE MCGUIRE 165 STOP & EXTEND DRAIN TO FLOOR SINK; ROUGH & CONNECT COMPLETE
56	ICE MACHINE	1/2"	---	INDIRECT	FURNISHED BY OTHERS; PROVIDE MCGUIRE 165 STOP & EXTEND DRAIN TO FLOOR SINK; ROUGH & CONNECT COMPLETE

SNACK AVENUE FOOD SERVICE EQUIPMENT CONNECTION SCHEDULE

MARK	FIXTURE	CW	HW	WASTE	REMARKS
8	COFFEE MAKER	1/2"	---	---	FURNISHED BY OTHERS; PROVIDE BALL VALVE STOP; ROUGH & CONNECT COMPLETE
9	CAPPUCCINO DISPENSER	1/2"	---	---	FURNISHED BY OTHERS; PROVIDE BALL VALVE STOP; ROUGH & CONNECT COMPLETE
10	HOT BEVERAGE DISPENSER	1/2"	---	---	FURNISHED BY OTHERS; PROVIDE BALL VALVE STOP; ROUGH & CONNECT COMPLETE
11	ICED TEA BREWER	1/2"	---	---	FURNISHED BY OTHERS; PROVIDE BALL VALVE STOP; ROUGH & CONNECT COMPLETE
4A	FROZEN BEVERAGE DISPENSER	1/2"	---	---	FURNISHED BY OTHERS; PROVIDE BALL VALVE STOP; ROUGH & CONNECT COMPLETE
5A	POST MIX: 8 HEAD SERIES	1/2"	---	INDIRECT	FURNISHED BY OTHERS; PROVIDE BALL VALVE STOP & EXTEND DRAIN TO FLOOR SINK; ROUGH & CONNECT COMPLETE
5C	ICE MAKER FOR DRINK MACHINE	1/2"	---	INDIRECT	FURNISHED BY OTHERS; PROVIDE BALL VALVE STOP & EXTEND DRAIN TO FLOOR SINK; ROUGH & CONNECT COMPLETE

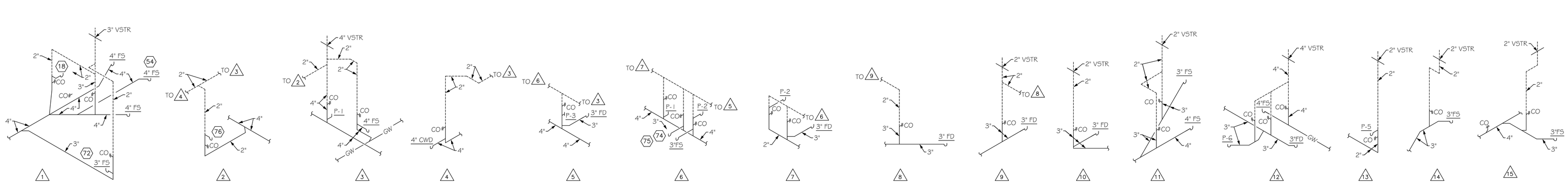

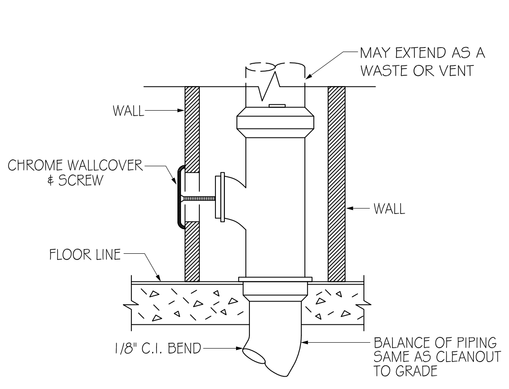

WALL CLEANOUT DETAIL
NO SCALE

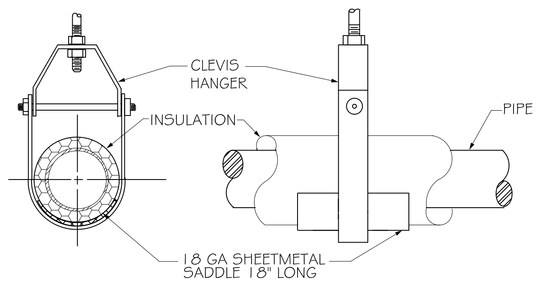

SUSPENDED PIPE SUPPORT
NO SCALE

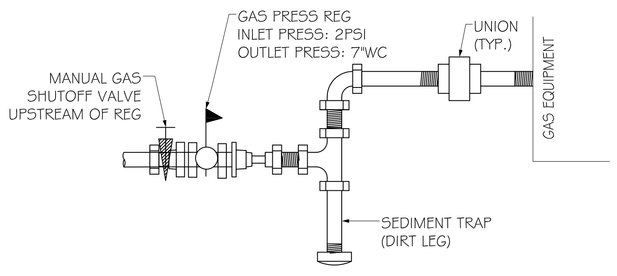

GAS CONNECTION DETAIL
NO SCALE

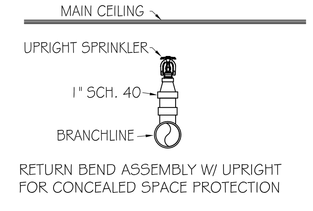

RETURN BEND ASSEMBLY W/ UPRIGHT FOR CONCEALED SPACE PROTECTION

SPRIG DETAIL
NO SCALE

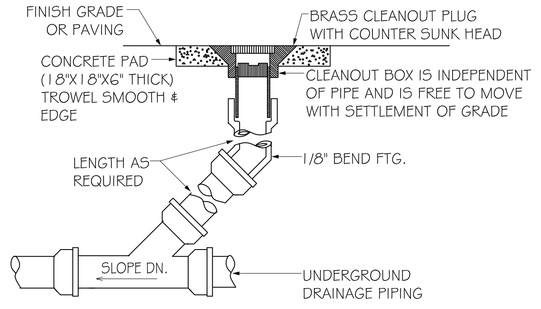

DETAIL OF YARD CLEANOUT
(SANITARY DRAIN) NO SCALE

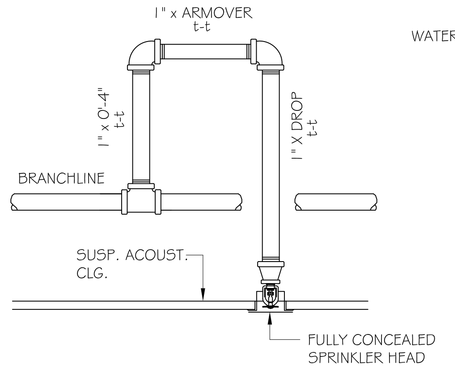

NOTE: PENDENT HEADS TO BE SPACED IN THE CENTER OF CEILING TILE WHERE LAY-IN CEILING OCCURS.

DROP PENDENT DETAIL
NO SCALE

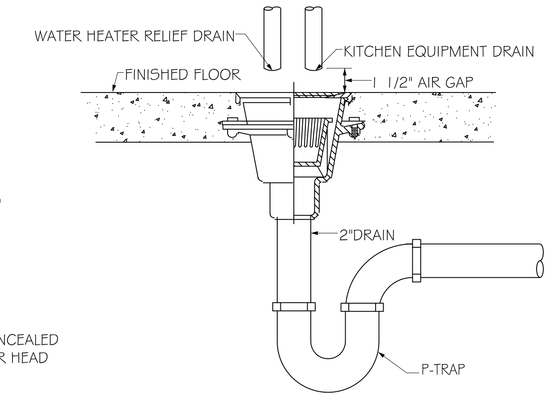

DETAIL OF PIPING AT FLOOR SINK & MECHANICAL ROOM FLOOR DRAIN
NO SCALE

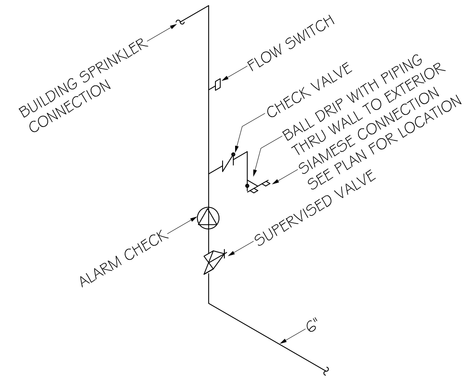

DETAIL OF FIRE SERVICE ENTRY
NO SCALE

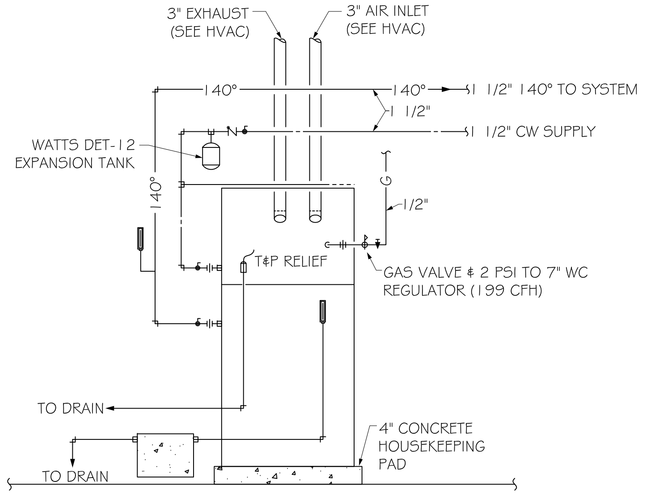

GAS WATER HEATER (GWH-1) DETAIL
NO SCALE

AAFES Real Estate Directorate
AAFES (RE-C) P.O.BOX 660320 DALLAS, TX 75266-0320

KEY PLAN:

DATE	REVISION NO. & DESCRIPTION	BY

ALABAMA LICENSED NO. 19512 PROFESSIONAL 1-18-12 ENGINEER LAWRENCE J. BOWMAN
09.07.086

BEG&S
ENGINEERING CONSULTANTS, INC.
BAGBY BOWNESS GILBREATH STREETMAN
HVAC ✦ PLUMBING ✦ FIRE PROTECTION
100 GRANDVIEW PLACE SUITE 130
BIRMINGHAM, AL 35243
PHONE: 205-969-4550
FAX: 205-969-4554
WEB: BBGSINC.COM

PARSONS WIBLE BRUMMAL ALKIRE / ARCHITECTS INC.
MONTGOMERY, ALABAMA

DESIGN BY: MTP
CHECKED BY: LJB

RECOMMENDED: DATE
APPROVED: DATE

ARMY & AIR FORCE EXCHANGE SERVICE
DEPARTMENTS OF THE ARMY & AIR FORCE

RE-C
REAL ESTATE DIRECTORATE

PROJECT:
TYNDALL AFB CONSTRUCT SHOPPETTE/ FOOD/CLASS6/GAS

TYNDALL AFB, FLORIDA

DRAWING TITLE:
PLUMBING DETAILS, LEGEND, SCHEDULES, NOTES & RISERS

DATE:	SCALE:	SHEET:
18 JAN 2012	NONE	P100

DRAWING PROJECT NO. 0941-09-000003

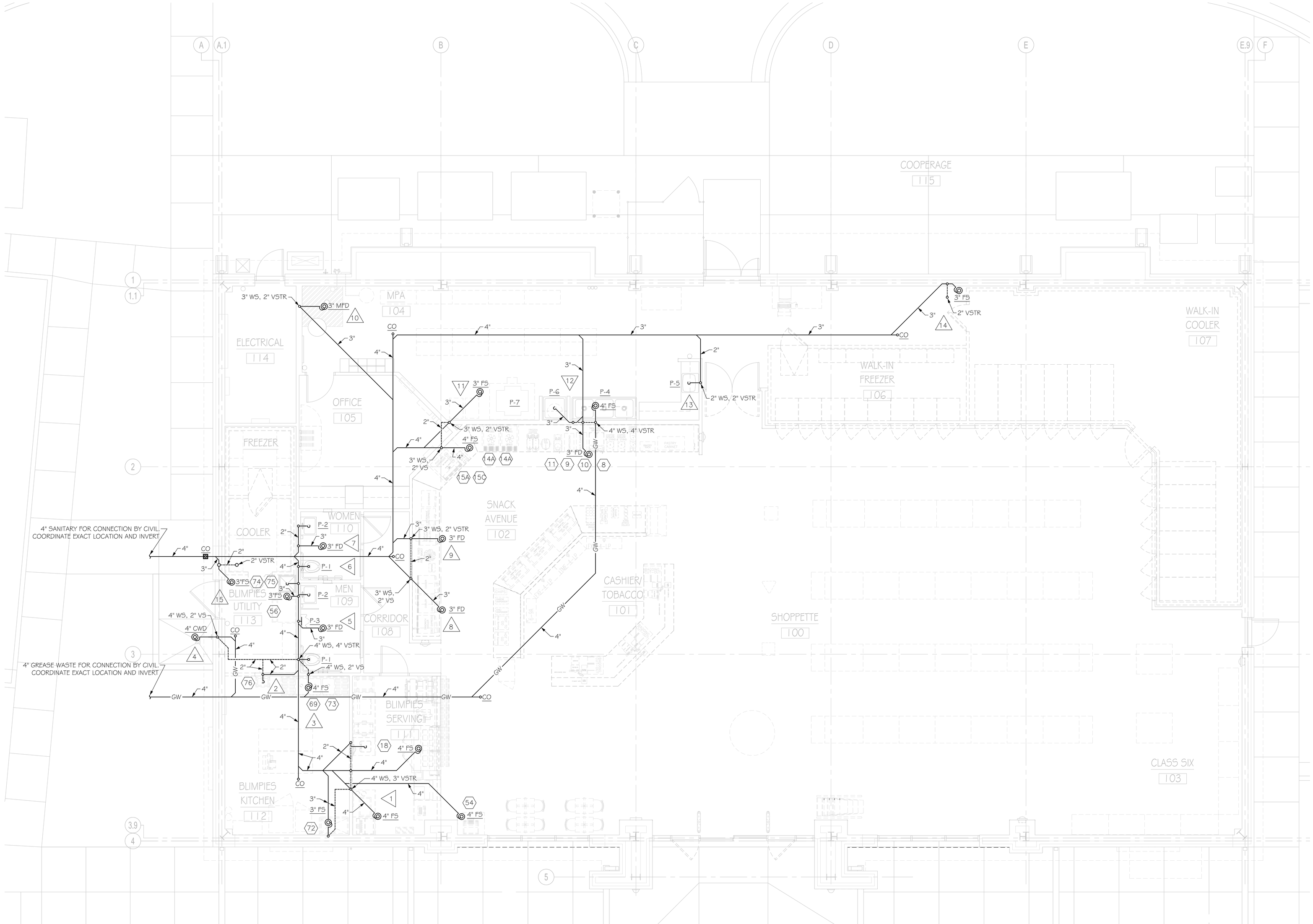

PLUMBING NEW WORK PLAN- NONPRESSURE

SCALE: 1/4" = 1'-0"

AAFES Real Estate Directorate

AAFES (RE-C) P.O.BOX 660320 DALLAS, TX 75266-0320

KEY PLAN:

DATE	REVISION NO. & DESCRIPTION	BY

ALABAMA LICENSED
NO. 19512
PROFESSIONAL
1-18-12
ENGINEER
LAWRENCE J. BOWNESS
09.07.086

BBG&S
ENGINEERING CONSULTANTS, INC.
BAGBY BOWNESS GILBREATH STREETMAN
HVAC + PLUMBING + FIRE PROTECTION
100 GRANDVIEW PLACE SUITE 130
BIRMINGHAM, AL 35243
PHONE: 205-969-4550
FAX: 205-969-4554
WEB: BBGSINC.COM

PARSONS WIBLE BRUMMAL ALKIRE / ARCHITECTS INC.
MONTGOMERY, ALABAMA

DESIGN BY: MTP

CHECKED BY: LJB

RECOMMENDED: DATE

APPROVED: DATE

ARMY & AIR FORCE EXCHANGE SERVICE
DEPARTMENTS OF THE ARMY & AIR FORCE

RE-C
REAL ESTATE DIRECTORATE

PROJECT:
TYNDALL AFB
CONSTRUCT SHOPPETTE/ FOOD/CLASS6/GAS

TYNDALL AFB, FLORIDA

DRAWING TITLE:
PLUMBING FLOOR PLAN – NONPRESSURE PIPING

DATE:	SCALE:	SHEET:
18 JAN 2012	1/4" = 1'-0"	P101

DRAWING PROJECT NO.
0941-09-000003

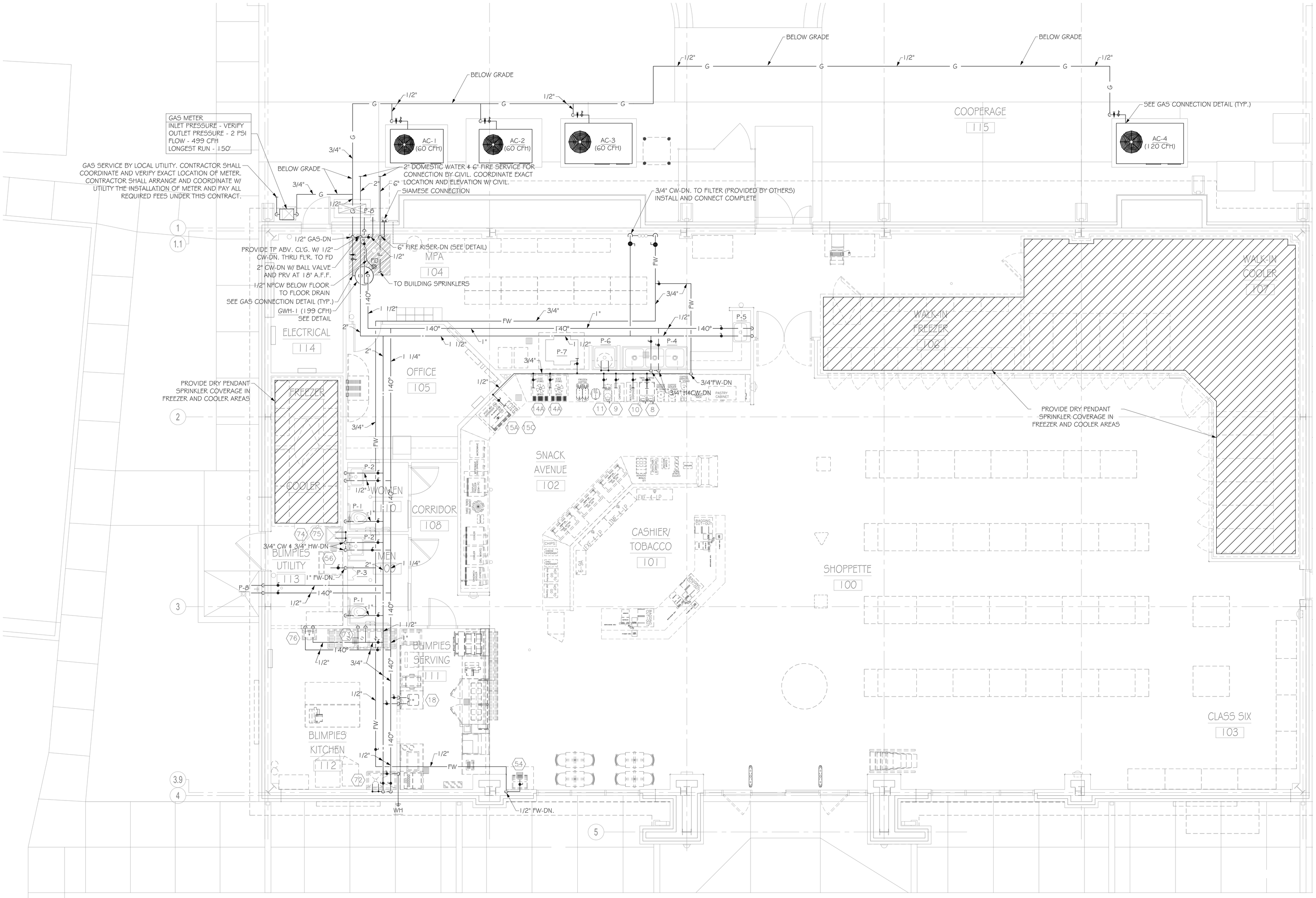

PLUMBING NEW WORK PLAN- PRESSURE

SCALE: 1/4" = 1'-0"

AAFES
Real Estate Directorate
AAFES (RE-C) P.O.BOX 660320 DALLAS, TX 75266-0320

KEY PLAN:

DATE	REVISION NO. & DESCRIPTION	BY

ALABAMA LICENSED NO. 19512 PROFESSIONAL ENGINEER LAWRENCE J. BOWNES 1-18-12
09.07.086

BBG&S
ENGINEERING CONSULTANTS, INC.
BAGBY BOWNESS GILBREATH STREETMAN
HVAC ✦ PLUMBING ✦ FIRE PROTECTION
100 GRANDVIEW PLACE SUITE 130
BIRMINGHAM, AL 35243
PHONE: 205-969-6550
FAX: 205-969-6554
WEB: BBGSINC.COM

PARSONS WIBLE BRUMMAL ALKIRE / ARCHITECTS INC.
MONTGOMERY, ALABAMA

DESIGN BY: MTP
CHECKED BY: LJB

RECOMMENDED: DATE
APPROVED: DATE

ARMY & AIR FORCE EXCHANGE SERVICE
DEPARTMENTS OF THE ARMY & AIR FORCE

RE-C
REAL ESTATE DIRECTORATE

PROJECT:
TYNDALL AFB
CONSTRUCT SHOPPETTE/ FOOD/CLASS6/GAS

TYNDALL AFB, FLORIDA

DRAWING TITLE:
PLUMBING FLOOR PLAN – PRESSURE PIPING

DATE: 18 JAN 2012
SCALE: 1/4" = 1'-0"
SHEET: P102
DRAWING PROJECT NO. 0941-09-000003

GENERAL NOTES:

1. ALL WORK SHALL BE IN ACCORDANCE WITH LOCAL, STATE AND FEDERAL CODES. WORK MUST CONFORM TO DIVISION 15 OF THE CONSTRUCTION SPECIFICATION, UNLESS OTHERWISE NOTED.
2. CONTRACTOR SHALL VERIFY CLEARANCES ROUTING AND TIE-INS PRIOR TO FABRICATION AND INSTALLATION OF ALL WORK.
3. CARE SHALL BE EXERCISED DURING SITE FABRICATION TO INSURE THAT NO INTERFERENCE WITH OPERATIONS OR OPERATING EQUIPMENT OCCURS. ALL WORK PERFORMED IS TO BE ISOLATED AS TO INSURE NO DUST, DEBRIS, VAPORS, ETC. ENTER OCCUPIED OPERATING SPACES.
4. EQUIPMENT SHALL BE AS SCHEDULED ON DRAWINGS. WHERE ACCEPTABLE ALTERNATE MANUFACTURER'S ARE LISTED, EQUIPMENT SHALL BE OF EQUAL QUALITY AND CAPACITY AS THE EQUIPMENT SCHEDULED. THE CONTRACTOR SHALL BE RESPONSIBLE FOR ANY ARRANGEMENT CHANGES REQUIRED TO ACCOMMODATE USE OF ALTERNATE EQUIPMENT. SUBSTITUTION OF OTHER EQUIPMENT SHALL BE SUBMITTED FOR APPROVAL TO THE CONTRACTING OFFICER PER REQUIREMENTS OF THE SPECIFICATIONS.
5. MECHANICAL DRAWINGS ARE DIAGRAMMATIC AND SUBJECT TO REQUIREMENTS OF THE ARCHITECTURAL DRAWINGS AND CONDITIONS IN THE FIELD. MECHANICAL DRAWINGS INDICATE GENERALLY THE LOCATION OF COMPONENTS AND ARE NOT INTENDED TO SHOW ALL FITTINGS OR ALL DETAILS OF THE WORK.
6. FOLLOW THE DRAWINGS CLOSELY, COORDINATE DIMENSIONS WITH ARCHITECTURAL DRAWINGS AND FIELD CONDITIONS. DO NOT SCALE MECHANICAL DRAWINGS FOR LOCATIONS OF SYSTEM COMPONENTS.
7. MAKE NO CHANGES WITHOUT THE CONTRACTING OFFICER'S WRITTEN PERMISSION. IN CASE OF DOUBT, OBTAIN CONTRACTING OFFICER'S DECISION BEFORE PROCEEDING WITH WORK. FAILURE TO FOLLOW THIS INSTRUCTION SHALL MAKE THE CONTRACTOR LIABLE FOR DAMAGE TO OTHER WORK CAUSED BY THE CONTRACTOR'S FORCES AND RESPONSIBLE FOR REMOVING AND REPAIRING DEFECTIVE OR MISLOCATED WORK IN A PROPER MANNER.
8. DO NOT SCALE DRAWINGS TO LOCATE DIFFUSERS AND EQUIPMENT, COORDINATE WITH LIGHTING, ELECTRICAL CONDUIT, CABLE RACK, SMOKE DETECTORS, CEILING GRIDS, SPRINKLER SYSTEM, AND OTHER TRADES.
9. PRIOR TO PREPARING SUBMITTALS VERIFY ALL EQUIPMENT VOLTAGES WITH THE ELECTRICAL DRAWINGS, AND ELECTRICAL CONTRACTOR AND REPORT ANY INCONSISTENCIES TO THE MECHANICAL ENGINEERING CONSULTANT AS SOON AS POSSIBLE AND BEFORE ORDERING ANY EQUIPMENT.
10. PROTECT MECHANICAL EQUIPMENT FROM DAMAGE DURING CONSTRUCTION. WHEN INSTALLATION IS COMPLETE CLEAN EQUIPMENT AND MAKE READY FOR PAINTING.
11. INSTALL ALL EQUIPMENT TO PROVIDE NORMAL SERVICE ACCESS TO ALL COMPONENTS. INSTALL IN ACCORDANCE WITH MANUFACTURER'S INSTRUCTIONS. IF MANUFACTURER'S INSTRUCTIONS CONFLICT WITH CONTRACT DOCUMENTS OBTAIN CONTRACTING OFFICER'S DECISION BEFORE PROCEEDING.
12. WHEN WORKING ABOVE ELECTRICAL EQUIPMENT, POWER PANELS, ETC. THE CONTRACTOR SHALL TAKE PRECAUTIONS NECESSARY TO PROTECT ELECTRICAL EQUIPMENT FROM DAMAGE.
13. THE MECHANICAL CONTRACTOR SHALL BE RESPONSIBLE FOR FIRE STOPPING WALL PENETRATIONS AT FIRE RATED WALLS WHERE DUCTWORK OR PIPING ARE INSTALLED. FIRE STOPPING SHALL BE PERFORMED IMMEDIATELY AFTER THE WORK IS INSTALLED. DO NOT LEAVE PENETRATIONS UNPROTECTED OVERNIGHT.
14. THE CONTROL CONTRACTOR SHALL BE RESPONSIBLE FOR FIRE STOPPING WALL PENETRATIONS AT FIRE RATED WALLS WHERE CONTROL CONDUITS, ETC ARE INSTALLED. FIRE STOPPING SHALL BE PERFORMED IMMEDIATELY AFTER THE WORK IS INSTALLED. DO NOT LEAVE PENETRATIONS UNPROTECTED OVERNIGHT.

DUCTWORK NOTES:

1. DUCTWORK, FITTINGS, AND ACCESSORIES SHALL BE FABRICATED AND INSTALLED IN ACCORDANCE WITH THE LATEST SMACNA FABRICATION STANDARDS.
2. DUCTWORK SHALL BE RUN TIGHT TO THE STRUCTURE. THE SUBCONTRACTOR SHALL VERIFY ALL ELEVATIONS, AND COORDINATE WITH OTHER TRADES.
3. SUBCONTRACTOR SHALL FURNISH AND INSTALL ALL NECESSARY MISCELLANEOUS SUPPORT STEEL REQUIRED FOR DUCTWORK INSTALLATION.
4. SUBCONTRACTOR SHALL FIELD VERIFY ALL DUCT RUNS AND FIELD MEASURE ALL FITTINGS, ELEVATIONS, AND DIMENSIONS PRIOR TO DUCT FABRICATION AND INSTALLATION.
5. DUCT SIZES ARE CLEAR INSIDE DIMENSIONS.
6. LOCATE DUCTWORK WITH SUFFICIENT SPACE AROUND EQUIPMENT TO ALLOW NORMAL OPERATING AND MAINTENANCE ACTIVITIES. NO DUCTWORK TO BE CLOSER THAN 12" TO CABLE RACKING AND LIGHTS. ALLOW MINIMUM 12" CLEARANCE WHEN PASSING OVER CABLE RACKING.

TEST ADJUST BALANCE

1. THE GENERAL CONTRACTOR SHALL PROVIDE COMPLETE TEST ADJUST AND BALANCE IN ACCORDANCE WITH THE AABC AND NEBB PROCEDURES AND STANDARDS FOR AC-1; AC-2; AC-3; AC-4; ALL RETURN FANS, EXHAUST FANS, AND ALL AIR DEVICES.
2. PROVIDE THREE COPIES OF THE FINAL TEST AND BALANCE REPORT.
3. BALANCE EQUIPMENT AND AIR DEVICES TO WITHIN +/- 10% OF AIR FLOW SHOWN.

AIR DEVICE SCHEDULE

MARK	DESCRIPTION	BASIS OF DESIGN	REMARKS
CEILING DIFFUSERS			
S1	AXB = NECK SIZE CFM = AIRFLOW W = ROUND RUNOUT (IN.) Z = THROW (4-WAY UNLESS NOTED OTHERWISE) FD = EQUIP WITH CEILING RADIATION DAMPER & BLANKET	LOUVERED FACE LAY-IN CEILING DIFFUSER TITUS TDC - BORDER NO.3	1. OBD - WITH ACCESSIBLE OPERATING LEVER 2. EQUALIZING GRID 3. SQUARE TO ROUND ADAPTER FOR NECK SIZES SMALLER THAN 9" BY 9" SQUARE. 4. PROVIDE EXTERNALLY INSULATED SUPPLY PLENUM FOR NECK SIZES 12" BY 12" AND LARGER.
S2	AXB = NECK SIZE CFM = AIRFLOW W = ROUND RUNOUT (IN.) Z = THROW FD = EQUIP WITH CEILING RADIATION DAMPER & BLANKET	LOUVERED FACE SURFACE MOUNTED CEILING DIFFUSER TITUS TDC - BORDER NO.6	1. OBD - WITH ACCESSIBLE OPERATING LEVER 2. EQUALIZING GRID 3. SQUARE TO ROUND ADAPTER FOR NECK SIZES SMALLER THAN 9" BY 9" SQUARE. 4. PROVIDE EXTERNALLY INSULATED SUPPLY PLENUM FOR NECK SIZES 12" BY 12" AND LARGER.
SIDEWALL SUPPLY REGISTERS			
S3	AXB = NECK SIZE CFM = AIRFLOW	SIDEWALL SUPPLY REGISTER TITUS - 300F	1. OBD. 2. VERTICAL FRONT BLADES
RETURN/EXHAUST GRILLES			
R1	R = RETURN E = EXHAUST T = TRANSFER AXB = NECK SIZE CFM = AIRFLOW FD = EQUIP WITH CEILING RADIATION DAMPER & BLANKET	ALUMINUM CUBE CORE "EGGCRATE" (1/2"X1/2"X1/2") TITUS - 50F BORDER TYPE NO.1 - ALUM. TITUS - 50R BORDER TYPE NO.1 - STEEL	1. OBD. 2. OBD NOT REQUIRED FOR TRANSFER GRILLES.
R2	R = RETURN E = EXHAUST T = TRANSFER AXB = NECK SIZE CFM = AIRFLOW	WALL RETURN GRILLE HORIZONTAL BARS SET AT 1/2" SPACING TITUS - 355ZRL BORDER TYPE NO.1 0°F DEFLECTION	

AC UNIT SCHEDULE - GAS HEAT

MARK	SERVES	SUPPLY FAN CFM	SUPPLY FAN E.S.P. IN W.G.	SUPPLY FAN HP	OUTSIDE AIR UNIT MIN.	COOLING CAPACITY SENSIBLE MBH	COOLING CAPACITY TOTAL MBH	COOLING CAPACITY ENT. AIR °Fdb	COOLING CAPACITY ENT. AIR °Fwb	HEATING CAPACITY INPUT MBH	HEATING CAPACITY OUTPUT MBH	HEATING CAPACITY ENT. AIR °F	ACCESSORIES	ELECTRICAL V/Ø	MIN. SEER/EER	NOMINAL TONS	BASIS OF DESIGN (TRANE)
AC-1	BLIMPIE	1100	0.6	1	113	26.9	37.0	78.7	65.3	60.0	48.0	65.3	(1)(2)(3)(4)(5)(6)(7)	208/3	15.0	3.0	YHC036
AC-2	OFFICE, MPA, TOILETS	1750	0.6	1	126	47.4	62.1	80.0	65.6	60.0	48.0	63.0	(1)(2)(3)(4)(5)(6)(7)	208/3	15.0	5.0	YHC060
AC-3	SNACK AVE	2000	0.6	1	270	47.4	62.1	79.3	65.6	60.0	48.0	62.5	(1)(2)(3)(4)(5)(6)(7)	208/3	15.0	5.0	YHC060
AC-4	TROOP STORE	3185	0.6	2	575	55.3	93.3	81.8	68.6	120.0	97.2	56.9	(1)(2)(3)(4)(5)(6)(7)	208/3	11.2	8.5	YSC102

NOTES:
- (A) COOLING CAPACITY IS GROSS CAPACITY AT 95F AMBIENT.
- (B) EER AT ARI 210/240 CONDITIONS
- (C) BELT DRIVE 3 PHASE MOTORS TO BE HIGH EFFICIENCY
- (D) MINIMUM HEATING EFFICIENCY = 78% PER ANSI Z21.47-1978
- (E) OTHER ACCEPTABLE MANUFACTURER'S: CARRIER, LENNOX

ACCESSORIES:
- (1) NATURAL GAS
- (2) BELT DRIVE
- (3) MOTORIZED OSA DAMPER
- (4) LOW AMBIENT CONTROL TO 10F
- (5) 2" THICK PLEATED FILTERS
- (6) DEHUMIDIFICATION CONTROL WITH REMOTE HUMIDITY SENSOR
- (7) COIL GUARD, AND RAIN HOOD

DUCTWORK LEGEND

SYMBOL	DESCRIPTION
18X12 WIDTH DEPTH	DUCTWORK, DOUBLE LINE INSIDE "FREE AREA" DIMENSIONS ARE SHOWN
16Ø 20X12 WIDTH DEPTH	DUCTWORK, DOUBLE LINE INSIDE "FREE AREA" DIMENSIONS SHOWN Ø= ROUND, ⇔= FLAT OVAL
	FLEXIBLE ROUND DUCT MAX. LENGTH = 5'-0"
HEIGHT 18X12 WIDTH	SUPPLY DUCTWORK SECTION INSIDE DIMENSIONS ARE SHOWN
HEIGHT 18X12 WIDTH	RETURN OR EXHAUST DUCTWORK SECTION OUTSIDE DIMENSIONS ARE SHOWN CLEAR
RISE	DUCTWORK RISE OR DROP ARROW SHOWS DIRECTION OF AIR FLOW
	ELBOW TURNED UP WITH TURNING VANES
	ELBOW TURNED DOWN WITH TURNING VANES
	RADIUS TYPE ELBOW CENTERLINE RADIUS = 1.5 X WIDTH
	SQUARE TYPE ELBOW WITH DOUBLE THICKNESS VANES. VANES REQUIRED IN ALL DUCTWORK ELBOWS U.N.O.
AD	ACCESS DOOR (AD) 12X12 UNLESS NOTED OTHERWISE
FD	FIRE DAMPER (FD), FIRE DAMPER-1 HOUR RATED (FD(SHR)), FIRE DAMPER W/SIDEWALL GRILLE (FD(THINLINE) (RUSKIN IBD20G)), COMBINATION SMOKE AND FIRE DAMPER (SFD), OR SMOKE DAMPER (SD). ALL FD, SFD AND SD SHALL HAVE A 12X12 AD U.N.O.
	CONICAL SPIN-IN
	MANUAL VOLUME DAMPER (MD)
MD	MANUAL VOLUME DAMPER WITH CONCEALED DAMPER REGULATOR. (YOUNGS REGULATOR- BEVEL GEAR TYPE)
AD	AUTOMATIC MOTOR OPERATED DAMPER (AD) ALL AD SHALL HAVE A 12X12 ACCESS DOOR U.N.O.
	FLEXIBLE DUCTWORK CONNECTION
	LOW PRESSURE RUNOUT WITH SQUARE-TO-ROUND TRANSITION AND CONICAL SPIN-IN.
14X12 8X12 20X12 12X12	EQUAL AREA SPLITTER

NOTE:
EQUIPMENT SUBMITTAL DATA WILL NOT BE REVIEWED UNTIL DUCTWORK AND PIPING SHOP DRAWINGS ARE SUBMITTED- SEE SECTION 15010 OF THE SPECIFICATIONS.

FAN SCHEDULE

MARK	SERVES	LOCATION	TYPE	CFM	E.S.P. IN. W.G.	LIMIT	MOTOR HP	MOTOR V/Ø	ACCESSORIES	INTERLOCK	BASIS OF DESIGN (GREENHECK)
EF-1	WOMEN'S TOILET	ABOVE CEILING	(A)	100	0.4	2.7 SONES	80 W	115/1	(1)(2)	LIGHT SWITCH	SP-B110
EF-2	MEN'S TOILET	ABOVE CEILING	(A)	100	0.4	2.7 SONES	80 W	115/1	(1)(2)	LIGHT SWITCH	SP-B110

FAN TYPES:
- (A) CEILING MOUNTED EXHAUST FAN, DIRECT DRIVE

FAN ACCESSORIES:
- (1) BACKDRAFT DAMPER
- (2) CEILING GRILLE

ELECTRIC HEATERS

MARK	SERVES	TYPE	CAPACITY	ELECTRICAL V/Ø	ACCESSORIES	REMARKS	BASIS OF DESIGN (MARKEL)
EWH-1	ELECTRICAL ROOM	(A)	1500 W	120/1	(1)	(1)	E3313T2RPW

HEATER TYPES:
- (A) EWH - ELECTRIC WALL HEATER

ACCESSORIES:
- (1) UNIT MOUNTED THERMOSTAT, ADD DISCONNECT SWITCH

REMARKS:
- (1) RECESSED MOUNTED, 7'-0" AFF MINIMUM.

FLY FANS (AIR CURTAINS):

MARK	LOCATION	SERVICE	APPROX. DOOR SIZE	MOTOR NO.	MOTOR HP	ELECTRICAL V/Ø	ACCESSORIES	BASIS OF DESIGN (MARS AIR DOORS)
FF-1	BLIMPIE KITCHEN	(A)	4'-0" X 7'-0"	1	1/2	120/1	(1)(2)	48CH

ACCESSORIES:
- (1) AUTOMATIC DOOR SWITCH AND DOOR SWITCH CONTROL
- (2) WASHABLE ALUMINUM AIR FILTER

SERVICE
- (A) FLY & INSECT CONTROL - MODERATE WIND

DUCTLESS SPLIT SYSTEM AC UNIT SCHEDULE - HEAT PUMP

INDOOR UNIT MARK	OUTDOOR UNIT MARK	SERVES	TYPE	SUPPLY FAN CFM	SUPPLY FAN HP	COOLING CAPACITY SENSIBLE MBH	COOLING CAPACITY TOTAL MBH	COOLING CAPACITY ENT. AIR °Fdb	COOLING CAPACITY ENT. AIR °Fwb	HEATING CAPACITY MBH	HEATING CAPACITY ENT. AIR °F	ACCESSORIES	INDOOR UNIT ELECTRICAL V/Ø	OUTDOOR UNIT ELECTRICAL V/Ø	NOMINAL TONS	BASIS OF DESIGN (MITSUBISHI)
AC-5	HP-5	ELECTRICAL ROOM	(A)	307		-	9.0	80.0	67.0	10.9	70.0		208/1	208/1	0.75	MSZ-A09NA

TYPE:
- (A) WALL MOUNTED TYPE

NOTES:
- (A) CAPACITIES ARE MINIMUM GROSS CAPACITIES.
- (B) OUTDOOR UNIT: CAPACITY TO BALANCE INDOOR COOLING AT 95F AMBIENT AND HEATING AT 47F AMBIENT.

AAFES Real Estate Directorate
AAFES (RE-C) P.O.BOX 660320 DALLAS, TX 75266-0320

KEY PLAN:

DATE	REVISION NO. & DESCRIPTION	BY

ALABAMA LICENSED LAWRENCE J. BRANNESS NO. 25512 PROFESSIONAL 1-18-12 ENGINEER 09.07.086

BEG&S
ENGINEERING CONSULTANTS, INC.
BAGLEY BOWNESS GILBREATH STREETMAN
HVAC ✦ PLUMBING ✦ FIRE PROTECTION
100 GRANDVIEW PLACE SUITE 130
BIRMINGHAM, AL. 35243
PHONE: 205-969-4550
FAX: 205-969-4554
WEB: BBGSINC.COM

PARSONS WIBLE BRUMMAL ALKIRE / ARCHITECTS INC.
MONTGOMERY, ALABAMA

DESIGN BY: MTP
CHECKED BY: LJB

RECOMMENDED: DATE

APPROVED: DATE

ARMY & AIR FORCE EXCHANGE SERVICE
DEPARTMENTS OF THE ARMY & AIR FORCE

RE-C
REAL ESTATE DIRECTORATE

PROJECT:
TYNDALL AFB
CONSTRUCT SHOPPETTE/ FOOD/CLASS6/GAS

TYNDALL AFB, FLORIDA

DRAWING TITLE:
LEGENDS, SCHEDULES, & NOTES

DATE:	SCALE:	SHEET:
18 JAN 2012	NONE	M100

DRAWING PROJECT NO.
0941-09-000003

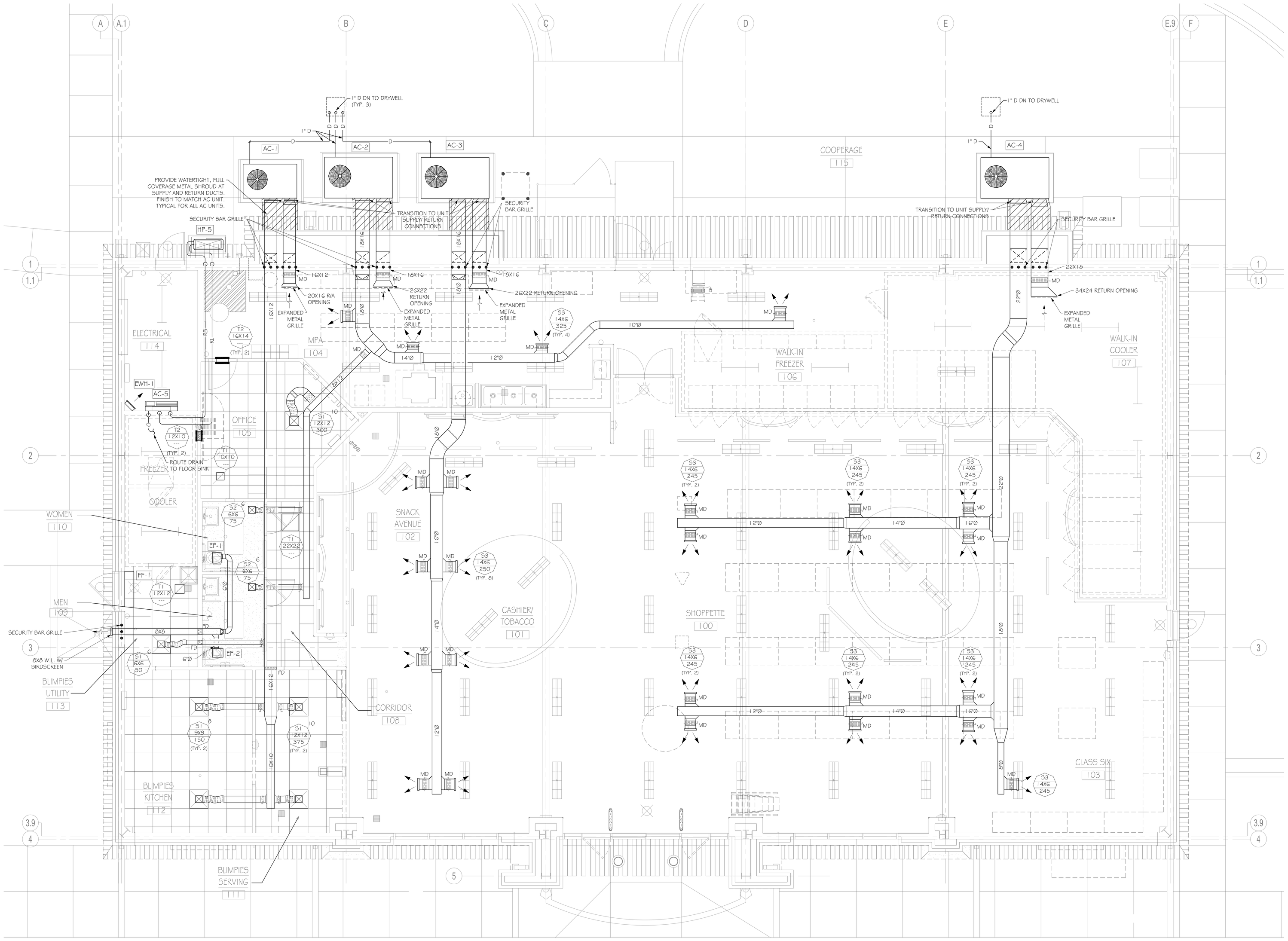

HVAC NEW WORK PLAN

SCALE: 1/4" = 1'-0"

AAFES Real Estate Directorate

AAFES (RE-C) P.O.BOX 660320 DALLAS, TX 75266-0320

KEY PLAN:

DATE	REVISION NO. & DESCRIPTION	BY

ALABAMA LICENSED NO. 25512 PROFESSIONAL ENGINEER LAWRENCE J. HAWKINS 1-18-12

09.07.086

BEG&S
ENGINEERING CONSULTANTS, INC.
BAGBY BOWNESS GILBREATH STREETMAN
HVAC ✦ PLUMBING ✦ FIRE PROTECTION
100 GRANDVIEW PLACE SUITE 130
BIRMINGHAM, AL 35243
PHONE: 205-969-4550
FAX: 205-969-4554
WEB: BBGSINC.COM

PARSONS WIBLE BRUMMAL ALKIRE / ARCHITECTS INC.
MONTGOMERY, ALABAMA

DESIGN BY: MTP

CHECKED BY: LJB

RECOMMENDED: DATE

APPROVED: DATE

ARMY & AIR FORCE EXCHANGE SERVICE
DEPARTMENTS OF THE ARMY & AIR FORCE

RE-C
REAL ESTATE DIRECTORATE

PROJECT:
TYNDALL AFB
CONSTRUCT SHOPPETTE/ FOOD/CLASS6/GAS

TYNDALL AFB, FLORIDA

DRAWING TITLE:
HVAC NEW WORK PLAN

DATE: 18 JAN 2012
SCALE: 1/4" = 1'-0"
SHEET: M101

DRAWING PROJECT NO.
0941-09-000003

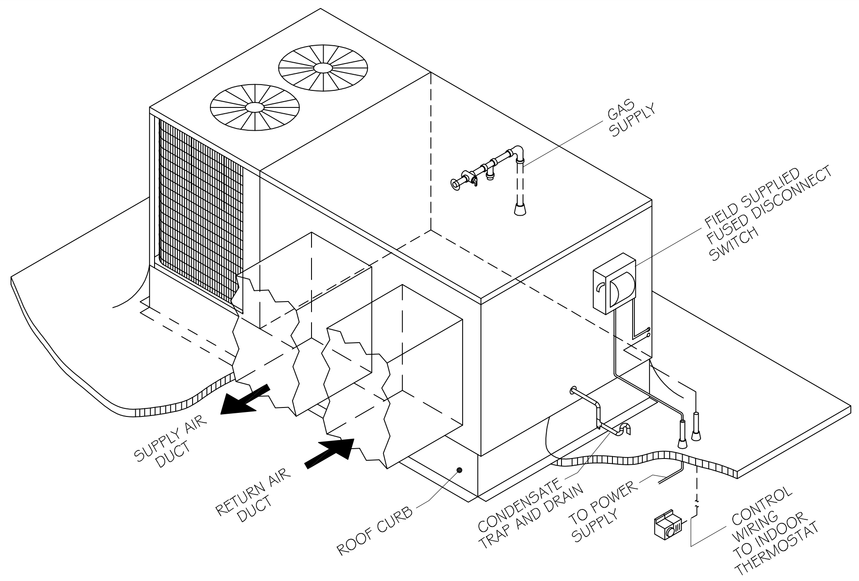

ROOFTOP PACKAGED HVAC UNIT DETAIL WITH HORIZONTAL SUPPLY AND RETURN DUCTS

NOT TO SCALE

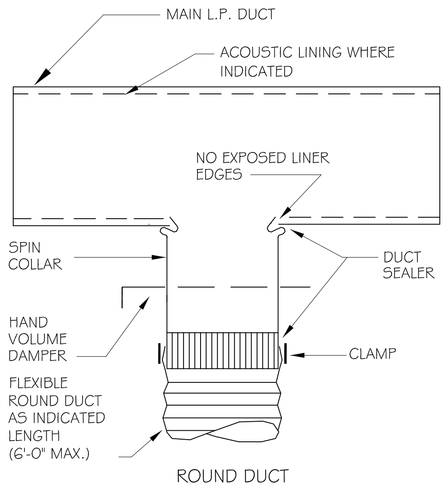

ROUND DUCT

TYPICAL LOW PRESSURE BRANCH DUCT TAKE-OFF

NOT TO SCALE

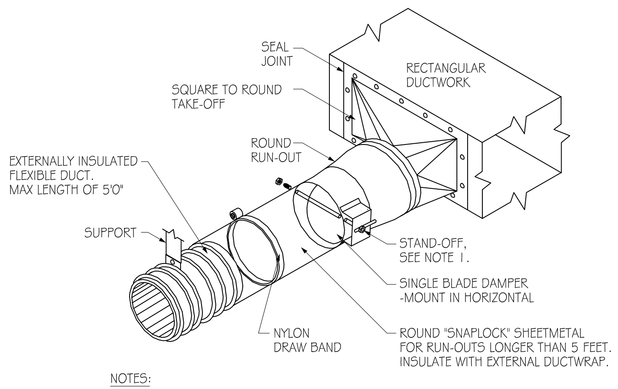

NOTES:

1. PROVIDE STAND-OFF AND EXTENSION ROD TO ACCOMMODATE INSULATION.
2. INSULATE SPIN-IN WITH EXTERNAL DUCT WRAP. SLIT INSULATION AT DAMPER RODS. SEAL JOINTS VAPOR TIGHT WITH MASTIC.
3. SEAL ALL JOINTS TO PREVENT LEAKAGE.

LOW PRESSURE SQUARE TO ROUND BRANCH DUCT CONNECTOR DETAIL

SCALE: NONE

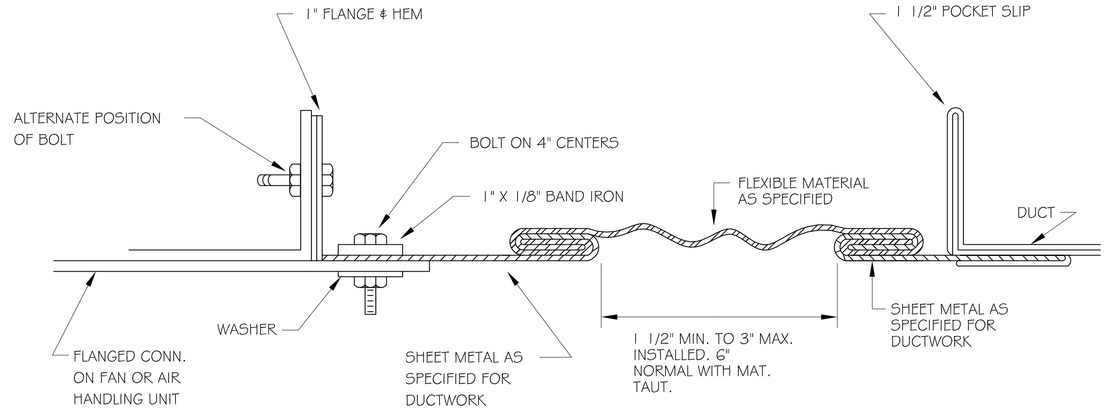

RECTANGULAR FLEXIBLE CONNECTION DETAIL

SCALE: NONE

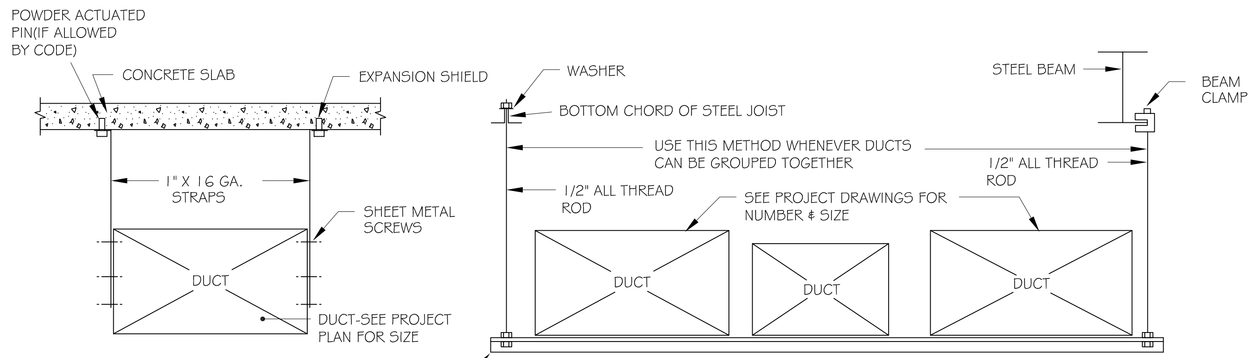

SINGLE RECTANGULAR DUCT

MULTIPLE DUCT RUNS ON TRAPEZE HANGERS

NOTE: DUCTS SHALL BE SUPPORTED AT NOT LESS THAN 10FT. O.C.

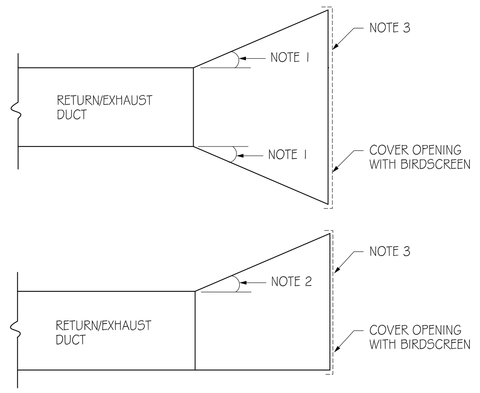

NOTES:

1. MAXIMUM ANGLE OF 15 DEGREES.
2. MAXIMUM ANGLE OF 30 DEGREES.
3. MAXIMUM FACE VELOCITY OF 700 FEET PER MINUTE. FREE AREA OF OPENING IN SQUARE FEET SHALL BE DETERMINED BY REQUIRED CFM DIVIDED BY 700.

RETURN /EXHAUST DUCT OPENING DETAIL

SCALE: NONE

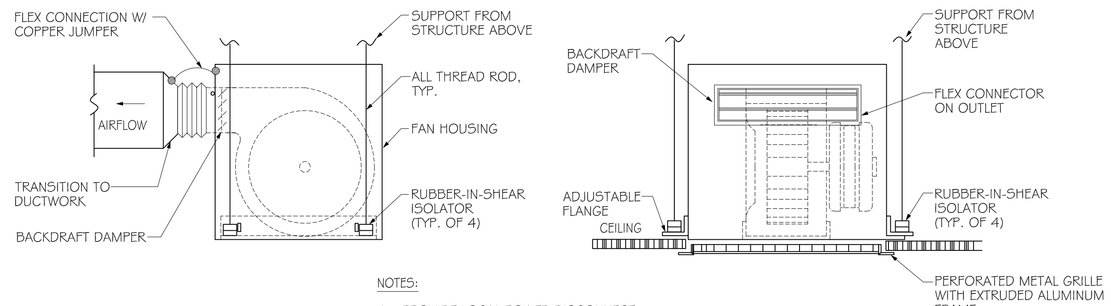

NOTES:

1. PROVIDE LOCAL POWER DISCONNECT
2. PROVIDE THIN LINE LOUVER WITH FLANGE FRAME BETWEEN CABINET FAN AND GRILLE AS REQUIRED.

CEILING MOUNTED EXHAUST FAN DETAIL

SCALE: NONE

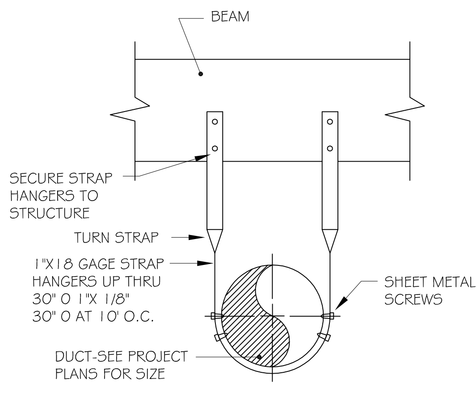

ROUND DUCT

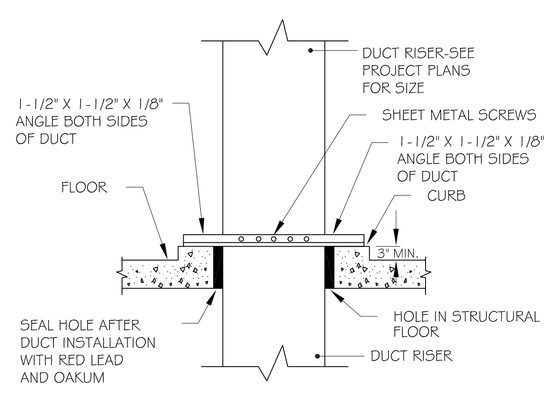

RISER SUPPORT

HANGER AND SUPPORT DETAILS FOR LOW PRESSURE DUCTWORK (UP THRU 2" WG)

(VARIOUS METHODS OF ATTACHMENT)
NOT TO SCALE

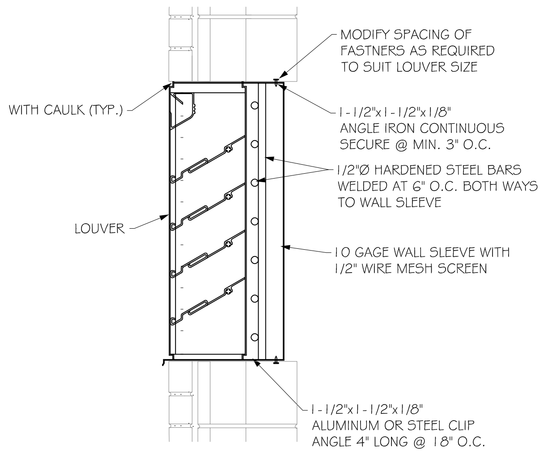

SECURE LOUVER DETAIL

SCALE: NONE

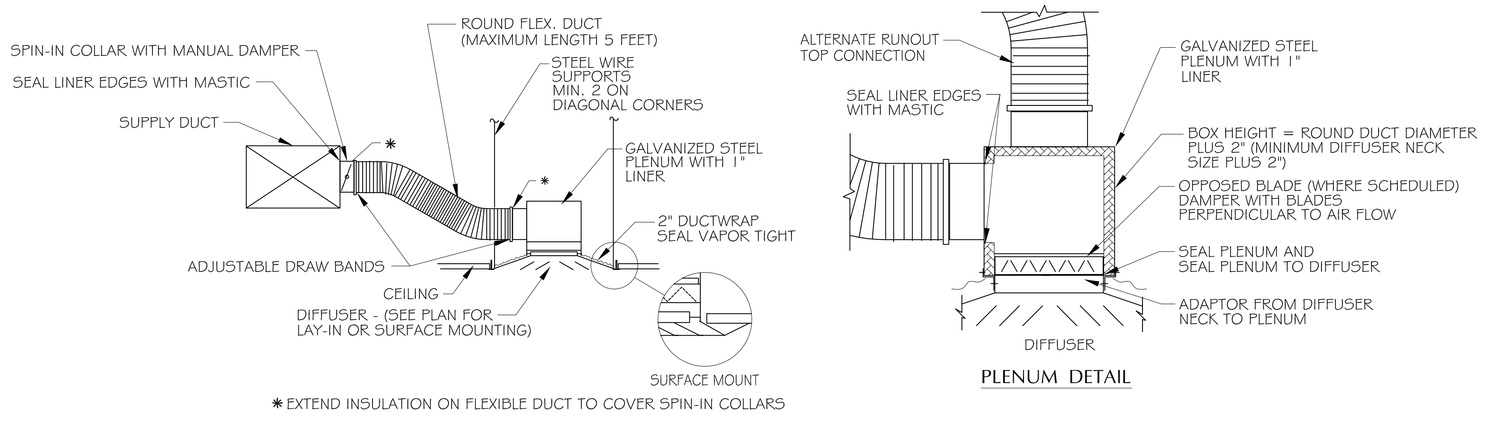

✱EXTEND INSULATION ON FLEXIBLE DUCT TO COVER SPIN-IN COLLARS

CEILING DIFFUSER DETAIL

NO SCALE

PLENUM DETAIL

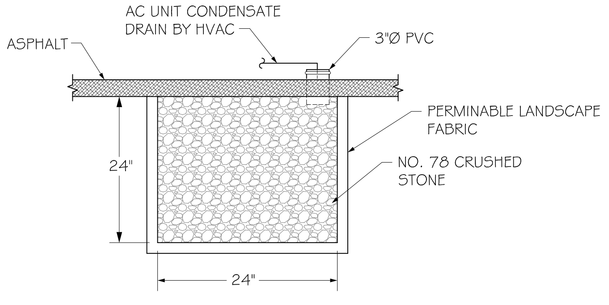

DRYWELL DETAIL

NO SCALE

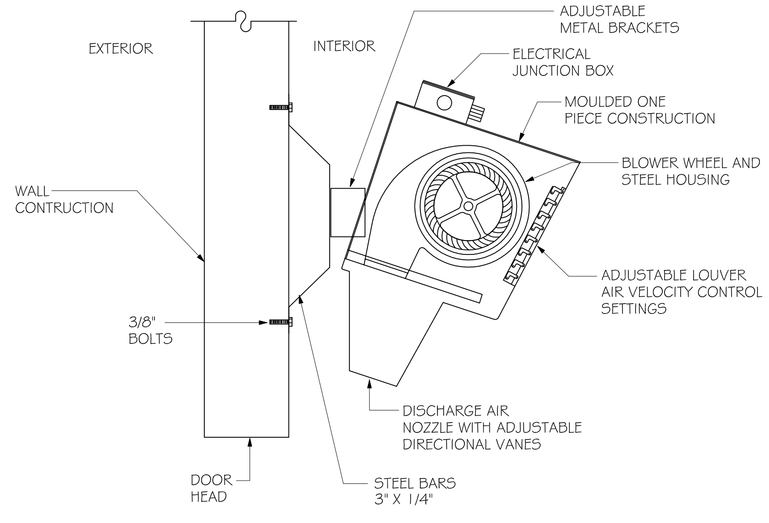

AIR CURTAIN FAN DETAIL

NO SCALE

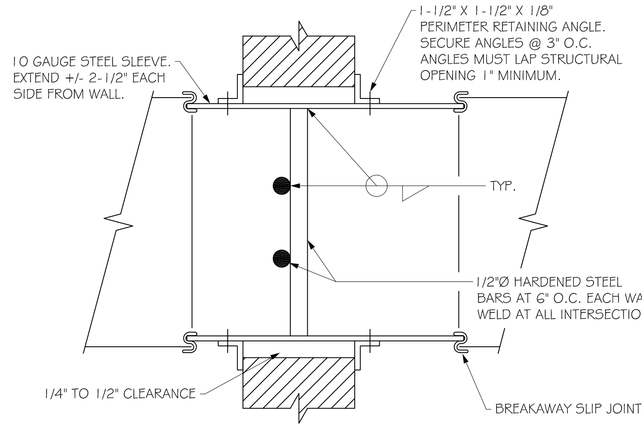

TYPICAL SECURITY BARS INSTALLATION DETAIL

NOT TO SCALE

NOTE:
DETAIL ABOVE IS FOR WALL PENETRATION - CEILING PENETRATION SIMILAR.
(REQUIRED FOR EXTERIOR WALL AND ROOF PENETRATIONS LARGER THAN A 6" X 10" OPENING.)

AAFES Real Estate Directorate
AAFES (RE-C) P.O.BOX 660320 DALLAS, TX 75266-0320

KEY PLAN:

DATE	REVISION NO. & DESCRIPTION	BY

ALABAMA LICENSED NO. 25512 PROFESSIONAL 1-18-12 ENGINEER LAWRENCE J. HANNESS
09.07.086

BBG&S
ENGINEERING CONSULTANTS, INC.
BAGBY BOWNESS GILBREATH STREETMAN
HVAC ✦ PLUMBING ✦ FIRE PROTECTION
100 GRANDVIEW PLACE SUITE 130
BIRMINGHAM, AL 35243
PHONE: 205-969-4550
FAX: 205-969-4554
WEB: BBGSINC.COM

PARSONS WIBLE BRUMMAL ALKIRE / ARCHITECTS INC.
MONTGOMERY, ALABAMA

DESIGN BY: MTP
CHECKED BY: LJB

RECOMMENDED: DATE
APPROVED: DATE

ARMY & AIR FORCE EXCHANGE SERVICE
DEPARTMENTS OF THE ARMY & AIR FORCE

RE-C
REAL ESTATE DIRECTORATE

PROJECT:
TYNDALL AFB
CONSTRUCT SHOPPETTE/ FOOD/CLASS6/GAS

TYNDALL AFB, FLORIDA

DRAWING TITLE:
MECHANICAL DETAILS

DATE: 18 JAN 2012
SCALE: NONE
SHEET: M102
DRAWING PROJECT NO. 0941-09-000003

LIGHTING FIXTURE SCHEDULE

FIXTURE MARK	LAMPS No.	LAMPS WATTS	LAMPS TYPE	FIXTURE DESCRIPTION	MANUFACTURER/ CATALOG NUMBER	NOTES
A	1	32	TRIPLE	RECESSED COMPACT FLUORESCENT W/ CLEAR SEMI-SPECULAR REFLECTOR	LITHONIA AF 1/32TRT 8 AR 120 METALUX C8142E 8351LI WILLIAMS PH85 132T CS EB1 120	1,2,4
B	1	175	METAL HALIDE	RECESSED H.I.D. DOWNLIGHT W/ WHITE PAINTED TRIM	LITHONIA AH 175M 8 AR CGL 120 TRW METALUX M7010T 750 55000LI WILLIAMS MH10 175ED17/MED 120	1,2,4,5
C	1	60	LED	FUEL CANOPY LIGHTS	LSI CR02 S LED 50 CW	1,2,4,5
D	1	26	TRIPLE	RECESSED COMPACT FLUORESCENT W/ CLEAR SEMI-SPECULAR REFLECTOR	LITHONIA AF 1/26TRT 8 AR 120 METALUX C8142E 8351LI WILLIAMS PH75 126T CS EB1 120	1,2,4
F2	2	32	F32T8	2'x 4', 2-LAMP, 4 FT. FLUORESCENT TROFFER W/ FLUSH ALUMINUM DOOR & .125" PRISMATIC ACRYLIC LENS	LITHONIA 2SPG 232 FW A12125 120 GEB10 METALUX 2GC FA 232 A125 120 EB81 WILLIAMS 50G S24 232 FA12125 EBLH2 120	1,2,4,7
F3	3	32	F32T8	2'x 4', 3-LAMP, 4 FT. FLUORESCENT TROFFER W/ FLUSH ALUMINUM DOOR & .125" PRISMATIC ACRYLIC LENS	LITHONIA 2SPG 332 FW A12125 120 GEB10 METALUX 2GC FA 332 A125 120 EB81 WILLIAMS 50G S24 332 FA12125 EBLH3 120	1,2,4,7
FI	2	32	F32T8	4 FT 2-LAMP PENDANT MOUNTED INDUSTRIAL W/ APERTURED REFLECTOR	LITHONIA LA 232 120 GEB10 METALUX IA SS 232 120 EB81 WILLIAMS 80 4 232 UL EBLH2 120	1,4,7
FS	2	32	F32T8	4 FT 2-LAMP SURFACE MOUNTED BARE LAMP STRIP	LITHONIA C 232 120 GEB10 METALUX SS 232 120 EB81 WILLIAMS 76 4 232 EBLH2 120	1,4,7
FV	2	32	F32T8	4 FT 2-LAMP SURFACE MOUNTED VAPORTIGHT W/ FIBERGLASS HOUSING AND 15% DR ACRYLIC DIFFUSER	LITHONIA DMW 232 120 GEB10 METALUX VT2 232DR 120 EB81 WILLIAMS 76 4 232 EBLH2 120	1,4,7
G	2	21	F21T5	DECORATIVE EXTERIOR WALL BRACKET W/ MATTE WHITE ACRYLIC DIFFUSER AND REGRESSED ALUMINUM PERF SHIELD, WET LOCATION LISTED	SHAPER 674-WP-43-T5/2/21-120V-CAL	1,4,6
H	3	32	TRT	16" DIA. COMPACT FLUOR. HIGH BAY W/ ACRYLIC DOME & CONICAL PRISMATIC ACRYLIC LENS; MOUNT BOTTOM OF FIXTURE 10'-0" A.F.F.	ATLANTIC HB 16 332 E1/2 PL	1,4
S1	1	250	MH250 PS	SINGLE HEAD RECTINLEAR STYLE AREA LIGHT W/ FULL CUTOFF DISTRIBUTION ON 20' SQUARE STEEL POLE; PROVIDE HANDHOLE NEAR BASE OF EACH POLE	LITHONIA AS2 250M SR4SC 208 SPA W/ POLE SSS 20 4G DM19AS GARDCO G18 1 4XL 250PSMH 208 BRP W/ POLE SSS 20 4 7 DM BRP	1,3,6
T	6	1.2	L.E.D.	MATTE CHROME, SINGLE CIRCUIT TRACK W/ L.E.D. TRACK LIGHTS NUMBER AS SHOWN ON PLAN; MOUNT BOTTOM OF TRACK 10'-0" A.F.F.	MP LIGHTING #L73 SR W35S 30 1 S	1,4
W	1	175	METAL HALIDE	H.I.D. EXTERIOR WALL BRACKET	LITHONIA TWH 175M 120 METALUX MHWP 175 120 TERON GPM175MH-MT	1,4,6
EM	FURN. W/ FIXTURE			EMERGENCY BATTERY PACK WITH 350-450 LUMEN OUTPUT	LITHONIA EL6 METALUX EL4 WILLIAMS EM500	1,4
⊗	FURN. W/ FIXTURE			LIGHTED EMERGENCY L.E.D. EXIT SIGN W/ BRUSHED ALUMINUM STENCIL FACE HOUSING & RED LETTERS	LITHONIA LE S 1 R 120 EL N. SURE LITES CAX 7 1 70 R PATHWAY LDEXICR	1,4

FIXTURE SCHEDULE NOTES:

1. ALL FIXTURES SHALL BE AS SPECIFIED OR APPROVED EQUALS.
2. CONTRACTOR SHALL COORDINATE RECESSED FIXTURES WITH CEILING TYPE TO INSURE MOUNTING COMPATABILITY; FURNISH ALL NECESSARY HANGERS, FRAMES, TRIMS, ETC... AS REQUIRED FOR A COMPLETE INSTALLATION.
3. FIXTURE TO BE WIRED FOR 208V OPERATION.
4. FIXTURE TO BE WIRED FOR 120V. OPERATION.
5. FIXTURE TO U.L. LISTED FOR DAMP LOCATION USE.
6. FIXTURE TO BE U.L. LISTED FOR OUTDOOR WET LOCATION USE.
7. LAMPS TO BE PHILIPS ALTO T8 3500°K LOW-MERCURY TYPE.

GENERAL NOTES

1. ALL ELECTRICAL WORK AND MATERIALS SHALL CONFORM TO THE 2009 EDITION OF THE INTERNATIONAL BUILDING CODE, THE 2008 EDITION OF THE NATIONAL ELECTRIC CODE, THE LATEST EDITION OF THE UNIFORM FACILITIES CRITERIA 3-600-01 AND THE REQUIREMENTS OF ANY STATE AND LOCAL AUTHORITIES HAVING JURISDICTION.
2. THE POWER WIRING SYSTEM SHALL CONSIST OF SINGLE CONDUCTOR COPPER CABLES INSTALLED IN CONDUIT. MINIMUM SIZES SHALL BE No. 12 AWG FOR CONDUCTORS AND 1/2" TRADE SIZE FOR CONDUIT. MINIMUM SIZE CONDUIT FOR HOMERUNS TO PANELS IS 3/4".
3. CONDUCTORS No. 10 AWG AND SMALLER SHALL BE SOLID. CONDUCTORS No. 8 AWG AND LARGER SHALL BE STRANDED. SEE SPECIFICATIONS FOR INSULATION TYPE.
4. ELECTRICAL GROUNDING SYSTEM SHALL CONFORM TO NEC ART. 250.
5. ELECTRICAL CONTRACTOR SHALL BE RESPONSIBLE FOR VISITING THE SITE TO VERIFY ALL EXISTING CONDITIONS PRIOR TO BID DATE.
6. VERIFY ALL DOOR SWINGS WITH ARCHITECTURAL PLANS BEFORE ROUGHING IN LIGHT SWITCHES.
7. VERIFY LOCATION AND RATINGS OF ALL MOTORS AND EQUIPMENT WITH THE SUPPLYING CONTRACTOR PRIOR TO ROUGH IN.
8. ALL ELECTRICAL EQUIPMENT SHALL BE FURNISHED AND INSTALLED BY THE ELECTRICAL CONTRACTOR UNLESS NOTED OTHERWISE.
9. CONTACTORS SHALL BE THE ELECTRICALLY HELD TYPE.
10. ALL UNDERGROUND CONDUIT RUNS ENTERING THE BUILDING SHALL BE SEALED TO PREVENT THE ENTRANCE OF MOISTURE AND GASES.
11. OBSERVE NEC CLEARANCE REQUIREMENTS WHEN MOUNTING ALL PANELS, SAFETY SWITCHES, ETC.; COORDINATE WITH ALL TRADES.
12. WHERE MULTIPLE RING KNOCKOUTS ARE UTILIZED, PROVIDE BONDING JUMPERS FROM BUSHING TO ENCLOSURE.
13. ALL HVAC EQUIPMENT CIRCUITS SHALL BE PROVIDED WITH A FUSIBLE HEAVY DUTY SAFETY SWITCH AT THE EQUIPMENT LOCATION. SWITCHES AND FUSES SHALL BE SIZED IN ACCORDANCE WITH THE MANUFACTURER'S SPECIFIC RECOMMENDATIONS FOR THE EQUIPMENT INSTALLED.
14. ALL WIRING DEVICES SHALL BE GRAY IN COLOR. DEVICE PLATES SHALL BE TYPE 302 BRUSHED STAINLESS STEEL; FURNISH BLANK PLATES FOR FUTURE OUTLETS.
15. ALL BRANCH AND FEEDER CIRCUITS SHALL CONTAIN AN INSULATED GREEN GROUNDING CONDUCTOR.
16. FOR CURB-MOUNTED ROOFTOP EQUIPMENT, ELECTRICAL CONDUITS SHALL BE RUN INSIDE OF CURB IN LIEU OF A SEPARATE ROOF PENETRATION.
17. AS PART OF ELECTRICAL SUBMITTALS, CONTRACTOR SHALL SUBMIT FULLY DIMENSIONED LAYOUT PLAN OF ROOM 121 ELEC. SHOWING ALL PANEL LOCATIONS FOR REVIEW PRIOR TO ROUGH-IN.
18. NO EXPOSED CONDUIT RUNS ON EXTERIOR OF BUILDING ARE ALLOWED.
19. PROVIDER FOR INSIDE COMMUNICATIONS WORK IS FAIRFIELD COMMUNICATIONS. POINT OF CONTACT: JEFF MCGUIRE 850-283-3801 (j.mcguire@tyndall.af.mil)

ELECTRICAL SYMBOLS LEGEND

FIXTURES
- D 8 b — CEILING MTD. FIXTURE, SURFACE OR RECESSED MTD. AS PER FIXTURE SCHEDULE. SHOWN IS FIXTURE TYPE 'D' ON CIRCUIT 8 CONTROLLED BY SWITCHb' '.
- SURFACE MTD. FLUORESCENT FIXTURE
- RECESSED OR SUSPENDED FLUORESCENT FIXTURE
- WALL MTD. FLUORESCENT FIXTURE
- WALL MTD. INCANDESCENT OR H.I.D. FIXTURE
- DR H — NIGHT LIGHT FIXTURE; 24 HOUR INDOOR, DUSK TO DAWN OUTDOOR
- LIGHTED EMERGENCY EXIT SIGN
- TRACK LIGHTING; LENGTH AS SHOWN ON DWGS.

SWITCHES
- $ — 1 POLE, 20, 120/277V SWITCH FLUSH MTD. 4'-0"H.
- $3 — 3-WAY, DO. DO. DO.
- $4 — 4-WAY, DO. DO. DO.
- $R — 1 POLE, 2 CIRCUIT, CENTER OFF MOMENTARY SWITCH
- $a — SWITCH CONTROLS OUTLET 'a', TYP.
- $M — MOTOR RATED SWITCH; NO. OF POLES AS REQ'D.
- $P — SWITCH W/ PILOT LIGHT; NO. OF POLES AS REQ'D.
- $K — KEY OPERATED SWITCH
- $C — CONTROL STATION FURNISHED WITH ELEC. DOOR OPERATOR
- WALL MOUNTED OCCUPANCY SENSOR SWITCH
- CEILING MOUNTED OCCUPANCY SENSOR SWITCH

CONDUITS AND CIRCUITING
- CONCEALED OVERHEAD OR IN WALLS
- CONCEALED BELOW FLOOR OR GRADE
- 60/3 — HOMERUN TO OTHER THAN A 20A-1P BREAKER; HOMERUN SHOWN IS TO A 60A-3P BREAKER.
- LA1,3 — HOMERUN TO PANEL; SHOWN ARE 3#12 CONDUCTORS RUN TO CIRCUITS 1 AND 3 IN PANEL 'LA' (SLASH MARKS INDICATE NUMBER OF CONDUCTORS, NO MARKS INDICATES 2 CONDUCTORS). CONDUITS TO BE SIZED AS SHOWN OR AS REQUIRED BY CODE.

POWER OUTLETS
- 20A-125V DUPLEX RECEPTACLE, NEMA 5-20R, MTD. 1'-6" H.
- DO. DO. , MTD. 3'-8"H.
- DO. DO. , MTD. 11'-0"H.
- DO. DO. , MTD. ABOVE CEILING
- WP — DO. DO. , W/ WEATHERPROOF COVER
- GFI — DO. DO. , GROUND FAULT CIR. INTERPT.
- TWO " " MTD. UNDER COMMON COVER 1'-6"H.
- C — TWO " " MTD. UNDER COMMON COVER ABOVE CEILING FOR CAMERA
- EWC — WATER COOLER OUTLET CONCEALED BEHIND EQUIP. ENCLOSURE
- SPECIAL CONFIGURATION OUTLET; SEE PLANS FOR DESCRIPTION
- J — JUNCTION BOX
- JS — JUNCTION BOX CONNECTION TO SIGN
- JCF — JUNCTION BOX CONNECTION TO CEILING FAN
- JHD — JUNCTION BOX CONNECTION TO HAND DRYER
- JAD — JUNCTION BOX CONNECTION TO AUTOMATIC DOORS AND SENSORS; VERIFY REQUIREMENTS WITH EQUIPMENT MANUFACTURER PRIOR TO ROUGH-IN
- POWER/COMM. POLE; WIREMOLD 30TP-4 SERIES OR EQUIV.

POWER EQUIPMENT
- LIGHTING/ APPLIANCE TYPE PANELBOARD
- DISTRIBUTION TYPE PANELBOARD
- T — TRANSFORMER; TYPE AND RATINGS AS SHOWN
- M — ELECTRIC MOTOR; TYPE AND RATINGS AS SHOWN
- FUSED SAFETY DISCONNECT SWITCH
- WP — NEMA 3R FUSED SAFETY DISCONNECT SWITCH
- M — ELECTRIC UTILITY METER
- SPD — SURGE PROTECTIVE DEVICE
- EPO — EMERGENCY POWER OFF FOR FUEL SYSTEM

TEL/COMM SYSTEMS
- ▼ — TELEPHONE OUTLET, MTD. 1'-6"H.
- ▼2 — DUAL TELEPHONE OUTLET, MTD. 1'-6"H.
- ▼W — TEL. OUTLET, MTD. 4'-6"H. W/ BRACKET TYPE WALL PLATE
- ▽ — DATA OUTLET, MTD 1'-6"H.
- ▽2 — DUAL DATA OUTLET, MTD 1'-6"H.
- ▼ — COMBINATION TEL. & DUAL DATA OUTLET, MTD 1'-6"H.
- ⊞ — QUAD DATA OUTLET, MTD 1'-6"H.
- TERMINAL BACKBOARD; 3/4" FIRE RATED PLYWOOD; SIZE AS SHOWN.

SECURITY SYSTEM
- SEC — SECURITY SYSTEM CONTROL PANEL
- KP — SYSTEM KEYPAD
- P — DURESS/PANIC ALARM SWITCH
- BMS — FLOOR MOUNTED WIDE-GAP BALANCED MAGNETIC SWITCH
- CONCEALED BALANCED MAGNETIC DOOR SWITCH
- M — MOTION DETECTOR

SOUND SYSTEM
- RECESSED CEILING MOUNTED SPEAKER; TAP AT 1 WATT - A.F.C.I.
- VC — RECESSED SPEAKER W/ VOLUME CONTROL- A.F.C.I.
- SUSPENDED SPEAKER AND ENCLOSURE; TAP AT 3 WATTS - A.F.C.I.
- SSEC — SOUND SYSTEM EQUIP. CABINET
- SURFACE MTD. HORN SPEAKER; TAP AT 5 WATTS - A.F.C.I.

FIRE ALARM SYSTEM
- FACP — FIRE ALARM CONTROL PANEL
- ANN — ANNUNCIATOR PANEL
- EST — EMERGENCY SYSTEM RADIO TRANSCEIVER
- F — MANUAL PULL STATION MTD. 3'-8" H.
- L — CLEAR FIRE STROBE LIGHT ASSEMBLY MTD. 6'-8" H.
- CLEAR FIRE STROBE LIGHT ASSEMBLY MTD. IN CEILING
- F — COMBINATION SPEAKER/ STROBE ASSEMBLY MTD. 6'-8" H.
- S — CLG. MTD. PHOTO-ELECTRIC DETECTOR
- S — DUCT MTD. PHOTO-ELECTRIC DETECTOR
- L — REMOTE DUCT DETECTOR LIGHT/TEST STATION MTD. 5'-0" H.
- FS — FLOW SWITCH
- OSY — TAMPER SWITCH
- H/L — HIGH/LOW AIR PRESSURE SWITCH
- G — GAS SOLENOID VALVE CONNECTION
- FD — FIRE DEPARTMENT CALL PHONE
- F — FIRE BELL

MASS NOTIFICATION SYSTEM
- MNS — MASS NOTIFICATION CONTROL PANEL
- LOC — LOCAL OPERATING CONSOLE
- M — M.N.S. WALL MOUNTED SPEAKER
- S — M.N.S. WALL MTD. AMBER STROBE LIGHT
- M.N.S. SPEAKER MTD. IN CEILING
- M.N.S. CEILING MTD. AMBER STROBE LIGHT

MISCELLANEOUS
- B — BUZZER
- PUSHBUTTON
- P — PHOTO-ELECTRIC CELL SWITCH
- TC — TIMECLOCK
- C — CONTACTOR; TYPE AS SHOWN
- ▼IC — DELIVERY INTERCOM SYSTEM
- FIC — FUEL SYSTEM MASTER INTERCOM
- IC — FUEL SYSTEM SLAVE INTERCOM

ABBREVIATIONS

H. or A.F.F.	MOUNTING HEIGHT ABOVE FINISHED FLOOR OR GRADE
WP	NEMA RATED FOR OUTDOOR USE
GFI	GROUND FAULT CIRCUIT INTERRUPTER
A.F.C.I.	AAFES FURNISHED/CONTRACTOR INSTALLED ITEM
EC	EMPTY CONDUIT; FURNISH W/ PULLWIRE
EM	FIXTURE W/ EMERGENCY BATTERY PACK; SEE SPECIFICATIONS

AAFES Real Estate Directorate
AAFES (RE-C) P.O.BOX 660320 DALLAS, TX 75266-0320

KEY PLAN:

[redacted]

DATE	REVISION NO. & DESCRIPTION	BY

ALABAMA REGISTERED PROFESSIONAL ENGINEER 27827 MARK L. REDDEN

PARSONS WIBLE BRUMMAL ALKIRE / ARCHITECTS INC.
MONTGOMERY, ALABAMA

DESIGN BY: AB
CHECKED BY: MR
RECOMMENDED: DATE
APPROVED: DATE

[redacted]

ARMY & AIR FORCE EXCHANGE SERVICE
DEPARTMENTS OF THE ARMY & AIR FORCE

RE-C
REAL ESTATE DIRECTORATE

[redacted]

PROJECT:
TYNDALL AFB
CONSTRUCT SHOPPETTE/ FOOD/CLASS6/GAS

TYNDALL, AFB
FLORIDA

DRAWING TITLE:
ELECTRICAL SYMBOLS LEGEND & NOTES

DATE:	SCALE:	SHEET:
18 JAN 2012	AS NOTED	E0.01

DRAWING PROJECT NO.
0941-09-000003

[redacted]

PANEL:LB1

VOLTS: 208Y/120V, 3PH,4 WIRE
MOUNTING: SURFACE
MAIN: 200 MB
BUS: 225 AIC: 22K

EQUIPMENT SERVED:	CKT.	BKR	PHASE A	PHASE B	PHASE C	BKR	CKT.	EQUIPMENT SERVED:
LTS-MPA, OFFICE	1	20/1	980			20/1	2	REC MPA
LTS-FREEZER, COOLER	3	20/1		675	1000	20/1	4	REC CPU
LTS-SHOPPETTE	5	20/1			975	20/1	6	REC OFFICE
LTS-SHOPPETTE	7	20/1	750	500		20/1	8	REC OFFICE
LTS-SHOPPETTE	9	20/1		675	500	20/1	10	REC OFFICE
LTS-SHOPPETTE	11	20/1			750	20/1	12	REC MPA
LTS-TRACK	13	20/1	70	540		20/1	14	REC EXTERIOR
LTS-TRACK	15	20/1		100	720	20/1	16	REC EXTERIOR
LTS-TRACK	17	20/1			40	20/1	18	REC EXTERIOR
LTS-TOILETS, CORR	19	20/1	360	540		20/1	20	REC SHOPPETTE
SPARE	21	20/1		.	540	20/1	22	REC SHOPPETTE
SPARE	23	20/1			.	20/1	24	REC SHOPPETTE FLOOR
SPARE	25	20/1	.	1000		20/1	26	REC SHOPPETTE FLOOR
EWH-1	27	20/1		1500	720	20/1	28	REC CASHIER
EXTERIOR SIGN	29	20/1			1000	1200	20/1	30	REC CASHIER
EXTERIOR SIGN	31	20/1	1000	720		20/1	32	REC CASHIER
EXTERIOR SIGN	33	20/1		1000	540	20/1	34	REC TOILETS
REC CEILING	35	20/1			1000	1000	20/1	36	REC CEILING
REC CEILING	37	20/1	1000	1000		20/1	38	REC CEILING
REC CEILING	39	20/1		1000	1000	20/1	40	REC CEILING
REC CEILING	41	20/1			1000	.	20/1	42	SPARE
SUBTOTALS			9000	9970	10305			

TOTAL VA – 29275

PANEL:LB2

VOLTS: 208Y/120V, 3PH,4 WIRE
MOUNTING: SURFACE
MAIN: 200 MB
BUS: 225 AIC: 22K

EQUIPMENT SERVED:	CKT.	BKR	PHASE A	PHASE B	PHASE C	BKR	CKT.	EQUIPMENT SERVED:
FACP	1	20/1	500	1600		20/1	2	REC MPA COUNTER
FAT	3	20/1		500	1200	20/1	4	REC
MNS	5	20/1			500	1000	20/1	6	GWH
TSE	7	20/1	500	457		20/3	8	ICE MAKER
TBB	9	20/1		500	457		10	↓
SSEC	11	20/1			500	457		12	↓
SEC	13	20/1	500	2880		30/1	14	AIR/WATER/VACUUM
AUTOMATIC DOOR	15	20/1		1000	2880	30/1	16	AIR/WATER/VACUUM
ICE MERCHANDISER	17	20/1			1600	1250	15/2	18	HP-5 (AC-5)
SPARE	19	20/1	.	1250			↓	20	↓
SPARE	21	20/1		.		20/1	22	SPARE
ATM	23	20/1			1600	20/1	24	SPARE
BUSSED SPACE	25						26	BUSSED SPACE
↓	27						28	↓
↓	29						30	↓
↓	31						32	↓
↓	33						34	↓
↓	35						36	↓
↓	37						38	↓
↓	39						40	↓
↓	41						42	↓
SUBTOTALS			7687	6537	6907			

TOTAL VA – 21131

PANEL:MP

VOLTS: 208Y/120V, 3PH,4 WIRE
MOUNTING: SURFACE
MAIN: 1000/3 M.B.
BUS: 1000 AIC: 65K

CKT.	LOAD DESCRIPTION	QUAN.	UNITS	LOAD AMPS øA	LOAD AMPS øB	LOAD AMPS øC	BREAKER AMPS	BREAKER POLES	REMARKS
1	SURGE PROTECTOR	–	–	0	0	0	60	3	
2	PANEL LA	–	–	182	156	143	200	3	
3	PANEL LB1/LB2	–	–	139	138	142	400	3	
4	PANEL LC	–	–	86	76	79	200	3	
5	PANEL FD	–	–	156	156	156	225	3	
6	PANEL LE	–	–	155	143	138	200	3	
7	PANEL LS	–	–	11	11	13	100	3	
8	BALER	–	–	35	35	35	60	3	
9	ICE MACHINE	–	–	34	34	34	60	3	
10	AC-1	3	TON	27	27	27	40	3	
11	AC-2	5	TON	41	41	41	60	3	
12	AC-3	5	TON	41	41	41	60	3	
13	AC-4	8.5	TON	46	46	46	60	3	
14									
15									
16									
17									
18									
19									
20									
CONNECTED PHASE TOTALS				990	974	895			

NOTES:
1. PROVIDE HACR RATED BREAKERS FOR ALL HVAC AND REFRIGERATION EQUIPMENT
2. PROVIDE SWITCHING DUTY (SWD) RATED BREAKERS FOR ALL LIGHTING BRANCH CIRCUITS.

PANEL:LC

VOLTS: 208Y/120V, 3PH,4 WIRE
MOUNTING: SURFACE
MAIN: 225 MLO
BUS: 225 AIC: 22K

EQUIPMENT SERVED:	CKT.	BKR	PHASE A	PHASE B	PHASE C	BKR	CKT.	EQUIPMENT SERVED:
REACH-IN COMPRESSOR	1	20/3	1467	800		20/1	2	COOLER DOOR LIGHTS
↓	3	↓		1467	1000	20/1	4	COOLER HEATER
↓	5	↓			1467	800	20/1	6	COOLER DOOR LIGHTS
REACH-IN FAN	7	20/1	720	1000		20/1	8	COOLER HEATER
REACH-IN DEFROST	9	20/1		1440	720	20/1	10	REACH-IN LIGHTS
REACH-IN E-DEFROST	11	20/2			1123	1600	20/1	12	WALK-IN FANS, HTRS
↓	13	↓	1123	1600		20/1	14	WALK-IN FANS, HTRS
WALK-IN CONDENSER	15	40/3		3602	.	20/1	16	SPARE
↓	17	↓			3602	.	20/1	18	SPARE
↓	19	↓	3602	.		20/1	20	SPARE
WALK-IN EVAPORATOR	21	20/2		905	.	20/1	22	SPARE
↓	23	↓			905	.	20/1	24	SPARE
BUSSED SPACE	25						26	BUSSED SPACE
BUSSED SPACE	27						28	BUSSED SPACE
BUSSED SPACE	29						30	BUSSED SPACE
BUSSED SPACE	31						32	BUSSED SPACE
BUSSED SPACE	33						34	BUSSED SPACE
BUSSED SPACE	35						36	BUSSED SPACE
BUSSED SPACE	37						38	BUSSED SPACE
BUSSED SPACE	39						40	BUSSED SPACE
BUSSED SPACE	41						42	BUSSED SPACE
SUBTOTALS			10312	9134	9497			

TOTAL VA – 28943

PANEL:LS

VOLTS: 208Y/120V, 3PH,4 WIRE
MOUNTING: RECESSED
MAIN: 225 MLO
BUS: 225 AIC: 22K

EQUIPMENT SERVED:	CKT.	BKR	PHASE A	PHASE B	PHASE C	BKR	CKT.	EQUIPMENT SERVED:
PARKING LOT LIGHTS	1	20/2	750	540		20/1	2	GAS CANOPY LTS.
↓	3	↓		750	540	20/1	4	GAS CANOPY LTS.
EXTERIOR BLDG LIGHTS	5	20/1			1200	360	20/1	6	GAS CANOPY LTS.
SPARE	7	20/1	0	–			8	BUSSED SPACE
SPARE	9	20/1		0	–		10	BUSSED SPACE
SPARE	11	20/1			0	–	12	BUSSED SPACE
SUBTOTALS			1266	1266	1560			

TOTAL VA – 5430

CONTACT POINTS

JIM VICKERS
POC GCEC
jvickers@gcec.com
850-445-5248

STEVE DUPONT
UTILITIES PRIVATIZATION COR
325 CES/CEOS
Steven.dupont@tyndall.af.mil
850-283-3208

GIL WALKER
UTILITIES MANAGER
325 CES/CEAO
Gilbert.walker@tyndall.af.mil
850-283-4715

SPECIAL NOTE:

CONTRACTOR SHALL PROVIDE AND ARRANGE FOR SERVICES (POWER AND COMMUNICATION) TO THE BUILDING AS SHOWN. CONTRACTOR SHALL VERIFY ALL CONTRACTOR RESPONSIBILITIES AND COORDINATE SERVICE REQUIREMENTS WITH ALL UTILITY AGENCIES PRIOR TO THE BID DATE. COSTS OR CHARGES FOR ANY WORK NECESSARY TO COMPLY WITH UTILITY REQUIREMENTS AND ANY COSTS FOR WORK DONE BY THE UTILITY SHALL BE INCLUDED IN THE BID PRICE.

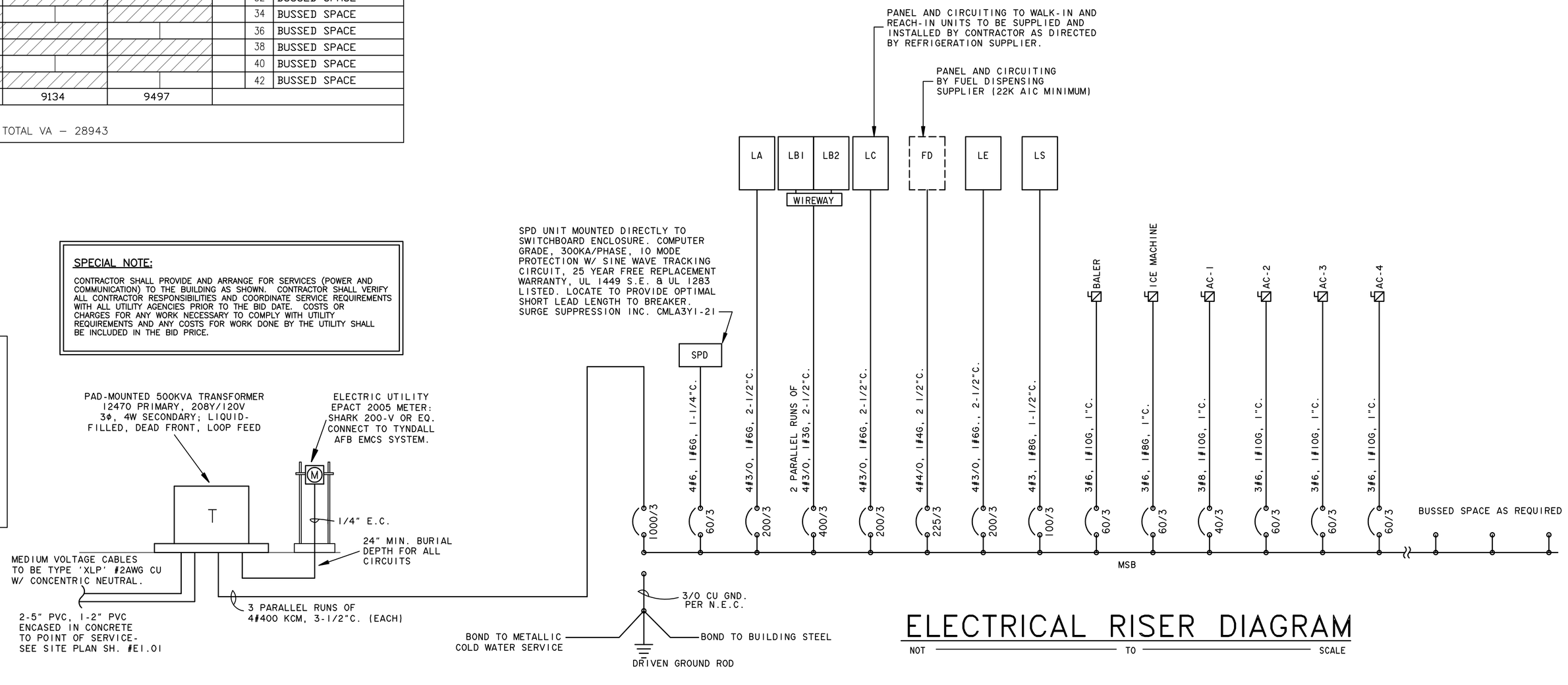

ELECTRICAL RISER DIAGRAM

NOT TO SCALE

AAFES Real Estate Directorate
AAFES (RE-C) P.O.BOX 660320 DALLAS, TX 75266-0320

KEY PLAN:

[redacted]

DATE	REVISION NO. & DESCRIPTION	BY

ALABAMA REGISTERED PROFESSIONAL ENGINEER MARK L. REDDEN 1/17/2012

PARSONS WIBLE BRUMMAL ALKIRE / ARCHITECTS INC.
MONTGOMERY, ALABAMA

DESIGN BY: AB
CHECKED BY: MR

RECOMMENDED: DATE
APPROVED: DATE

[redacted]

ARMY & AIR FORCE EXCHANGE SERVICE
DEPARTMENTS OF THE ARMY & AIR FORCE

RE-C
REAL ESTATE DIRECTORATE

[redacted]

PROJECT:
TYNDALL AFB
CONSTRUCT SHOPPETTE/ FOOD/CLASS6/GAS

TYNDALL, AFB
FLORIDA

DRAWING TITLE:
ELECTRICAL
RISER & MAIN
PANEL SCHEDULE

DATE: 18 JAN 2012
SCALE: AS NOTED
SHEET: E0.02
DRAWING PROJECT NO. 0941-09-000003

[redacted]

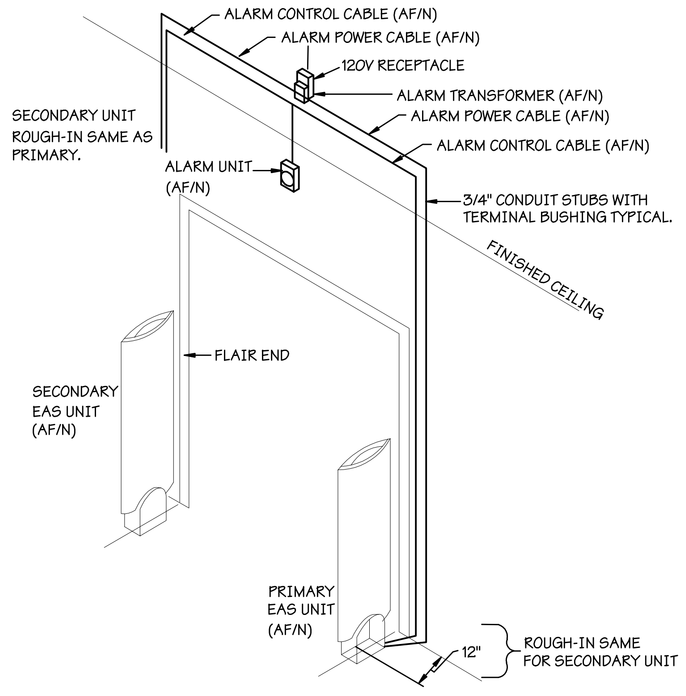

7 EAS SYSTEM ROUGH-IN DETAIL

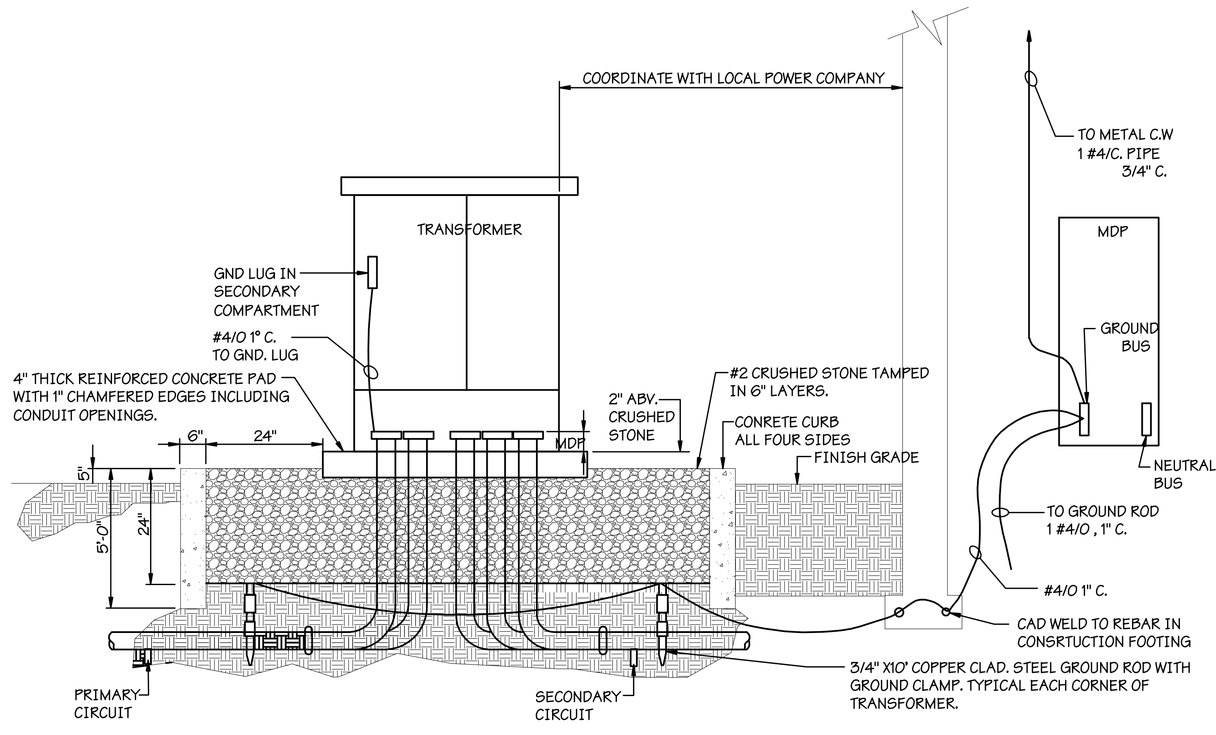

5 PAD MOUNT TRANSFORMER DETAIL

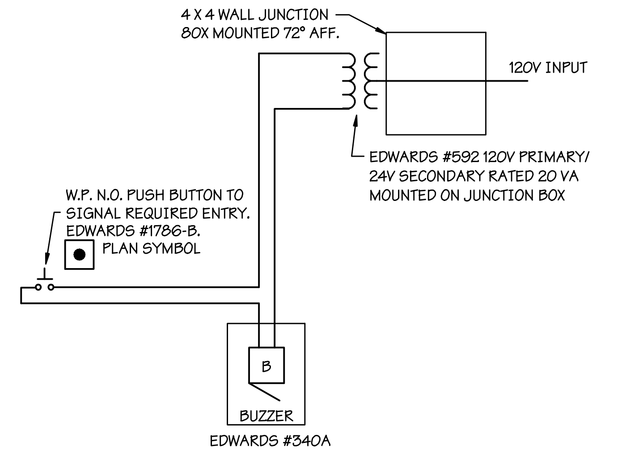

2 MPA DOOR BELL SCHEMATIC

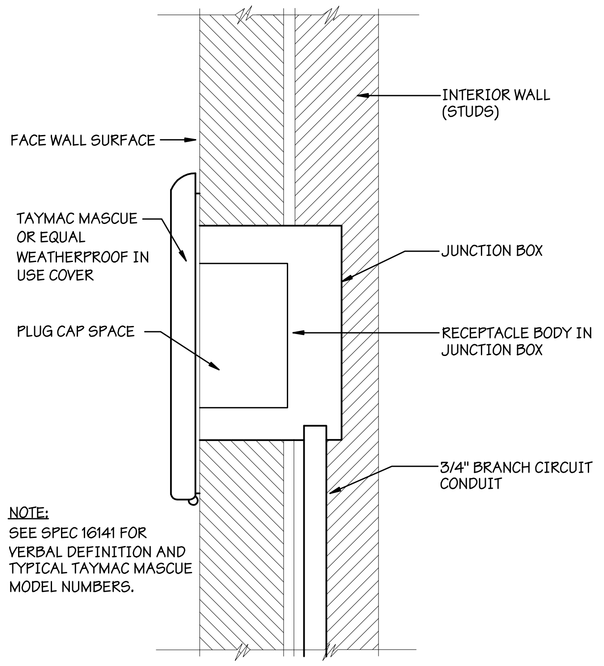

8 RECESSED EXTERIOR RECEPTACLE

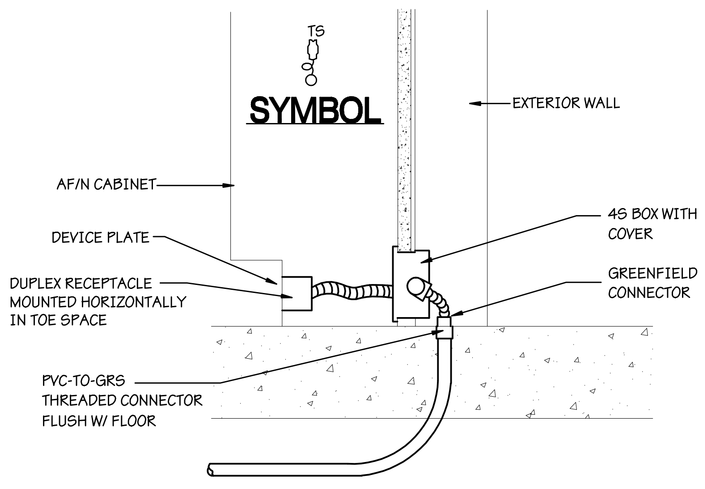

6 RECEPTACLE AT VINYL BASE

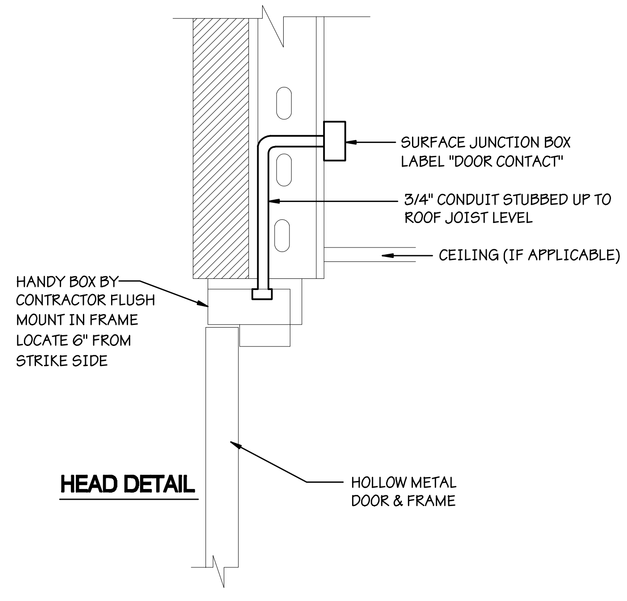

3 MAGNETIC DOOR SWITCH ROUGH-IN

AAFES
Real Estate Directorate
AAFES (RE-C) P.O.BOX 660320 DALLAS, TX 75266-0320

KEY PLAN:

[redacted]

DATE	REVISION NO. & DESCRIPTION	BY

ALABAMA REGISTERED PROFESSIONAL ENGINEER MARK L. REDDEN 1/18/2012

PARSONS WIBLE BRUMMAL ALKIRE / ARCHITECTS INC.
MONTGOMERY, ALABAMA

DESIGN BY: JR
CHECKED BY: MR

RECOMMENDED: DATE
APPROVED: DATE

[redacted]

ARMY & AIR FORCE EXCHANGE SERVICE
DEPARTMENTS OF THE ARMY & AIR FORCE

RE-C
REAL ESTATE DIRECTORATE

[redacted]

PROJECT:
TYNDALL AFB
CONSTRUCT SHOPPETTE/ FOOD/CLASS6/GAS

TYNDALL, AFB
FLORIDA

DRAWING TITLE:
ELECTRICAL DETAILS

DATE:	SCALE:	SHEET:
18 JAN 2012	AS NOTED	E0.03

DRAWING PROJECT NO.
0941-09-000003

[redacted]

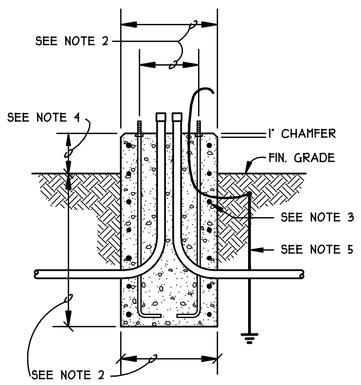

NOTES:
1. CONCRETE SHALL BE 3000 P.S.I. MINIMUM IN 28 DAYS.
2. ALL BASE SIZE AND BOLT CIRCLE DIMENSIONS SHALL BE IN ACCORDANCE WITH SPECIFIC MANUFACTURER'S RECOMMENDATIONS.
3. PROVIDE WELDED WIRE REINFORCEMENT FABRIC WITH A MINIMUM COVER FROM THE EDGES OF 2".
4. BASE TO EXTEND 6" ABOVE FINISHED GRADE IN UNPAVED AREAS. BASE IN PAVED AREAS TO EXTEND 20" ABOVE FINISHED GRADE. BASE TO HAVE RUBBED CONCRETE FINISH.
5. 5/8" x 10' COPPER CLAD GROUND ROD WITH #6 AWG BARE COPPER GROUND WIRE TO BONDING LUG IN POLE BASE.

AREA LIGHTING STANDARD TYPICAL BASE DETAIL
NOT TO SCALE

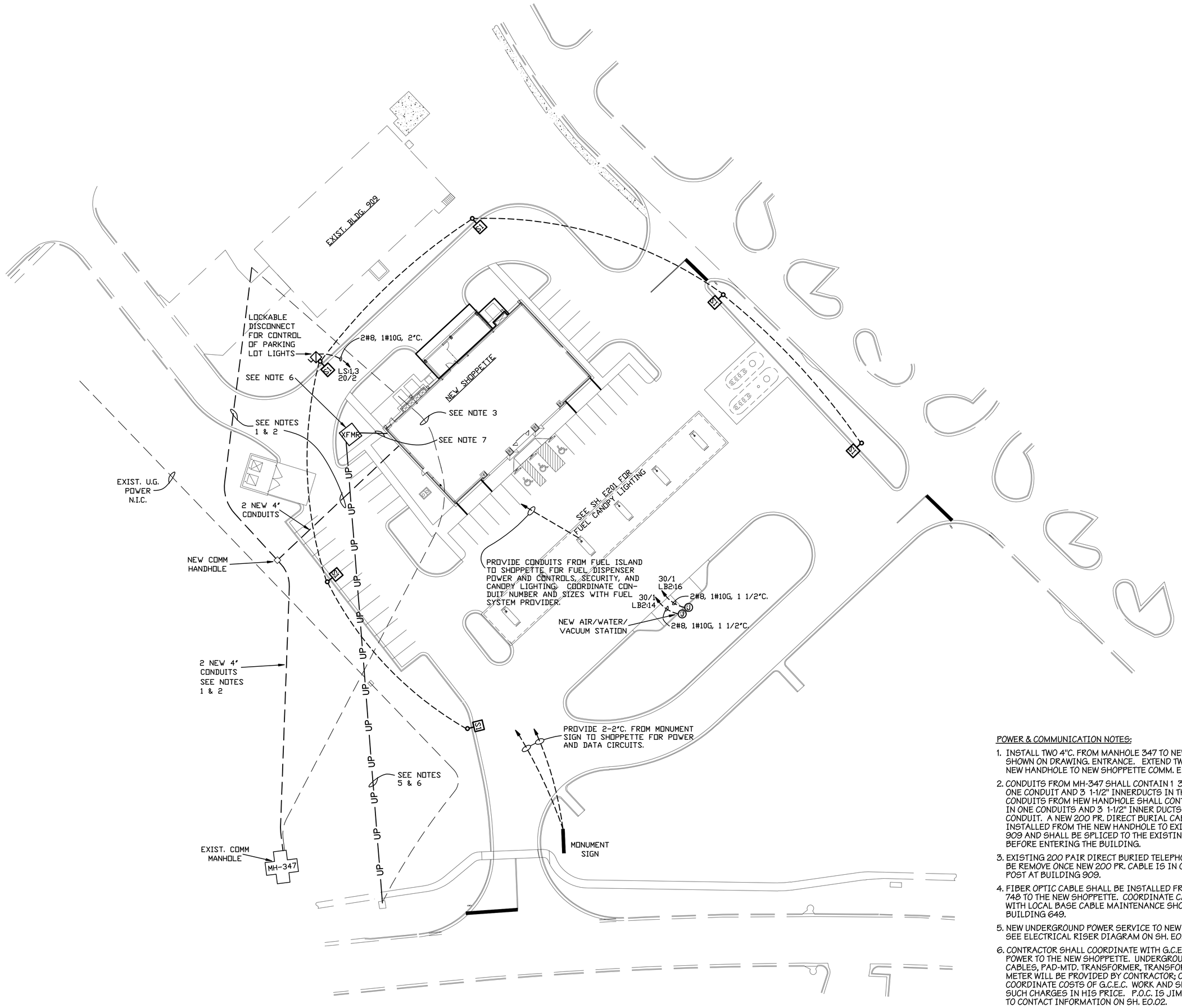

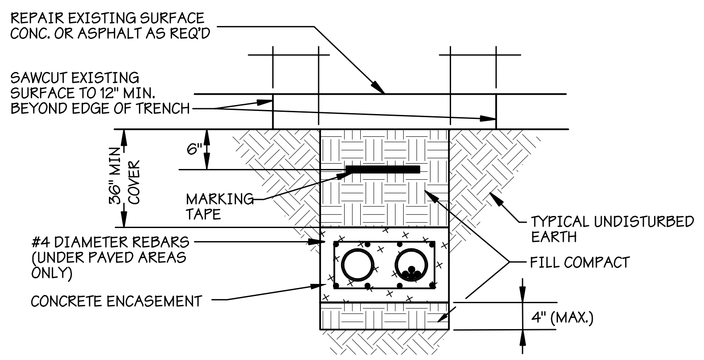

UNDER PAVED SURFACES
NO SCALE

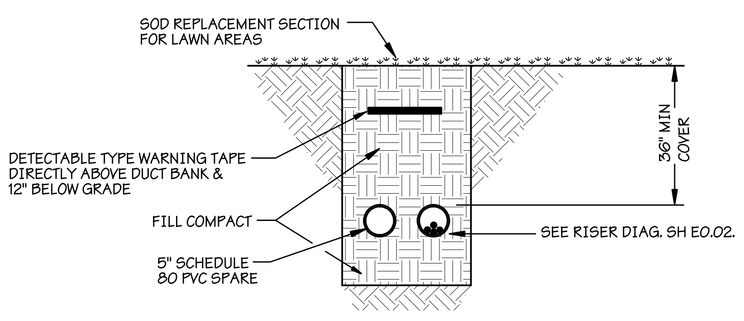

UNDER UNPAVED SURFACES
NO SCALE

TYPICAL DUCT BANK SECTIONS

SITE ELECTRICAL PLAN
SCALE: 1" = 30'-0"
0 30ft 120ft
15ft 60ft
NORTH

POWER & COMMUNICATION NOTES:
1. INSTALL TWO 4"C. FROM MANHOLE 347 TO NEW HANDHOLE SHOWN ON DRAWING. ENTRANCE. EXTEND TWO 4"C. FROM NEW HANDHOLE TO NEW SHOPPETTE COMM. ENTRANCE.
2. CONDUITS FROM MH-347 SHALL CONTAIN 1 300 PR. CABLE IN ONE CONDUIT AND 3 1-1/2" INNERDUCTS IN THE SECOND CONDUIT. CONDUITS FROM HEW HANDHOLE SHALL CONTAIN 1 50PR. CABLE IN ONE CONDUITS AND 3 1-1/2" INNER DUCTS IN THE SECOND CONDUIT. A NEW 200 PR. DIRECT BURIAL CABLE SHALL BE INSTALLED FROM THE NEW HANDHOLE TO EXIST. BUILDING 909 AND SHALL BE SPLICED TO THE EXISTING 200 PR. CABLE BEFORE ENTERING THE BUILDING.
3. EXISTING 200 PAIR DIRECT BURIED TELEPHONE CABLE SHALL BE REMOVE ONCE NEW 200 PR. CABLE IS IN OPERATION. POST AT BUILDING 909.
4. FIBER OPTIC CABLE SHALL BE INSTALLED FROM BUILDING 748 TO THE NEW SHOPPETTE. COORDINATE CABLE INSTALLATION WITH LOCAL BASE CABLE MAINTENANCE SHOP LOCATED IN BUILDING 649.
5. NEW UNDERGROUND POWER SERVICE TO NEW SHOPPETTE; SEE ELECTRICAL RISER DIAGRAM ON SH. E0.02.
6. CONTRACTOR SHALL COORDINATE WITH G.C.E.C. FOR PROVIDING POWER TO THE NEW SHOPPETTE. UNDERGROUND PRIMARY CABLES, PAD-MTD. TRANSFORMER, TRANSFORMER PAD, AND METER WILL BE PROVIDED BY CONTRACTOR; CONTRACTOR SHALL COORDINATE COSTS OF G.C.E.C. WORK AND SHALL INCLUDE SUCH CHARGES IN HIS PRICE. P.O.C. IS JIM VICKERS- REFER TO CONTACT INFORMATION ON SH. E0.02.
7. CONTRACTOR SHALL BE RESPONSIBLE FOR SECONDARY CONDUCTORS FROM TRANSFORMER LUGS TO THE SERVICE ENTRANCE EQUIPMENT. CONTRACTOR SHALL COORDINATE INSTALLATION OF METERING EQUIPMENT WITH G.C.E.C. AS REQUIRED.

AAFES
Real Estate Directorate
AAFES (RE-C) P.O.BOX 660320 DALLAS, TX 75266-0320

KEY PLAN:

DATE	REVISION NO. & DESCRIPTION	BY

ALABAMA REGISTERED 17827 7/31/2012 ENGINEER MARK L. REDDEN

PARSONS WIBLE BRUMMAL ALKIRE / ARCHITECTS INC.
MONTGOMERY, ALABAMA

DESIGN BY: MR
CHECKED BY: MR

RECOMMENDED: DATE
APPROVED: DATE

ARMY & AIR FORCE EXCHANGE SERVICE
DEPARTMENTS OF THE ARMY & AIR FORCE

RE-C
REAL ESTATE DIRECTORATE

PROJECT:
TYNDALL AFB
CONSTRUCT SHOPPETTE/ FOOD/CLASS6/GAS

TYNDALL, AFB
FLORIDA

DRAWING TITLE:
ELECTRICAL SITE PLAN

DATE: 18 JAN 2012
SCALE: AS NOTED
SHEET: E1.01
DRAWING PROJECT NO. 0941-09-000003

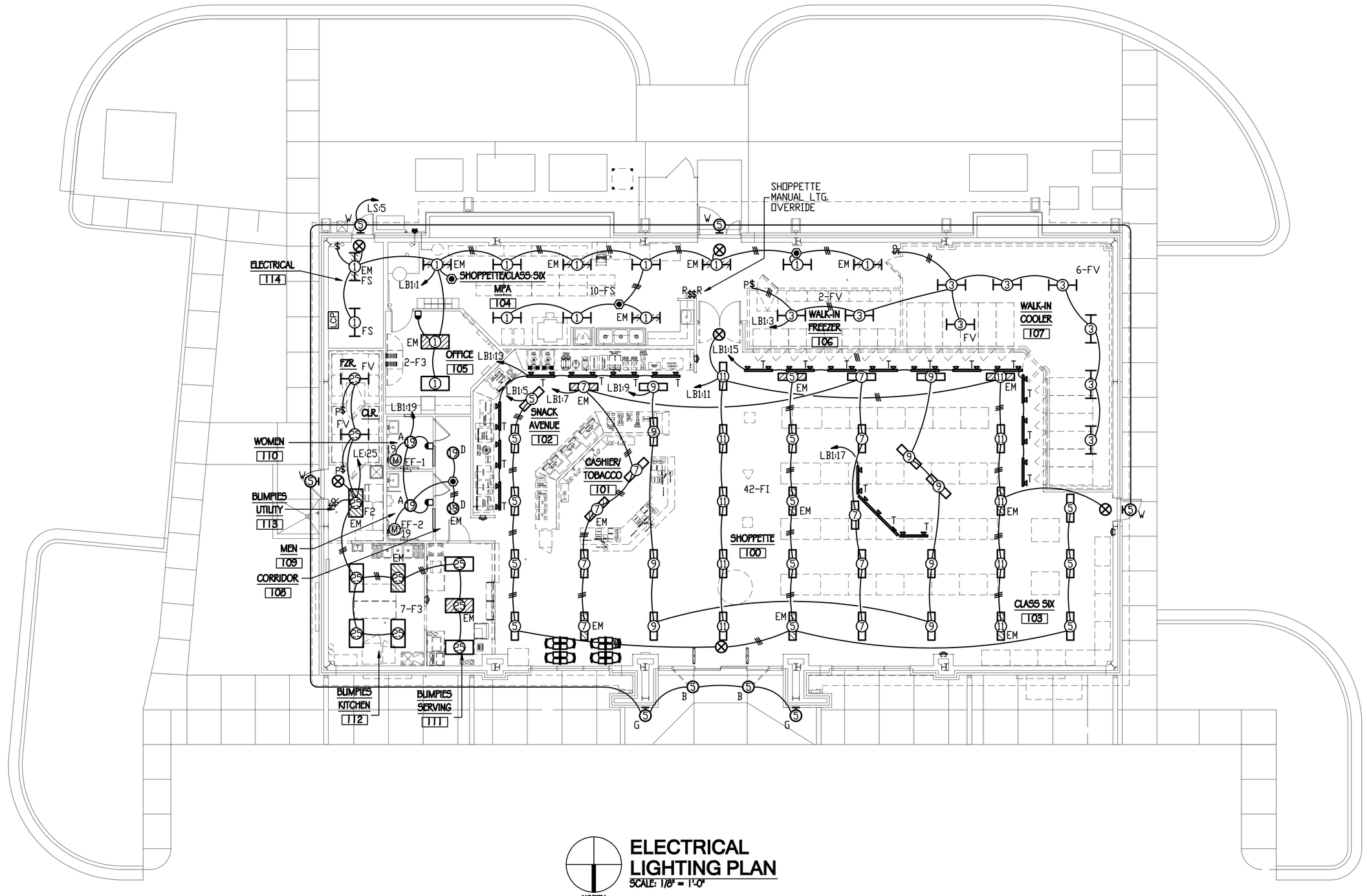

ELECTRICAL LIGHTING PLAN

SCALE: 1/8" = 1'-0"

NORTH

LIGHTING CONTROL PANEL			
ZONE	LOCATION	CIRCUITS	SCHEDULE
1	SHOPPETTE	LB1:5,9 LB1:3,7,11,13,15	PER AAFES
2	BLIMPIES	LE:25	PER AAFES
3	EXTERIOR LIGHTING	LS:1,2,3,4	PER AAFES
4	EXTERIOR SIGNAGE	LB:29,31,33 LE:27	PER AAFES
5	GAS CANOPY NIGHT LTS.	LS:5	DUSK-DAWN

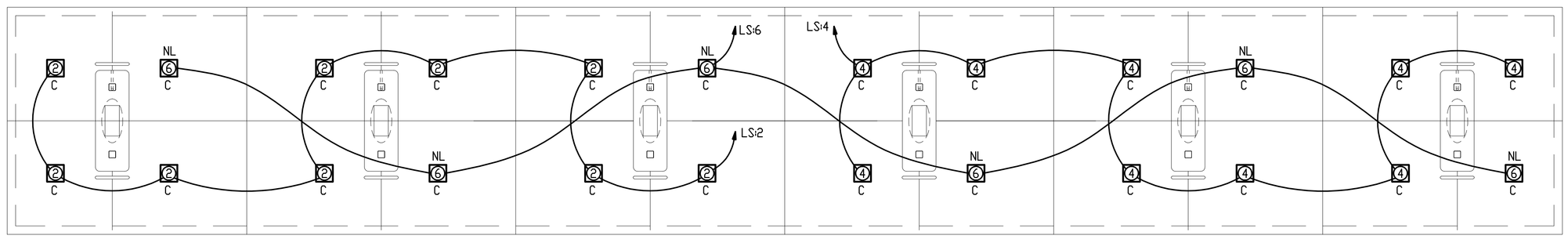

AAFES
Real Estate Directorate
AAFES (RE-C) P.O.BOX 660320 DALLAS, TX 75266-0320

KEY PLAN:

DATE	REVISION NO. & DESCRIPTION	BY

ALABAMA REGISTERED PROFESSIONAL ENGINEER MARK L. REDDEN
9/10/2012

PARSONS WIBLE BRUMMAL ALKIRE / ARCHITECTS INC.
MONTGOMERY, ALABAMA

DESIGN BY: JR
CHECKED BY: MR

RECOMMENDED: DATE
APPROVED: DATE

ARMY & AIR FORCE EXCHANGE SERVICE
DEPARTMENTS OF THE ARMY & AIR FORCE

RE-C
REAL ESTATE DIRECTORATE

PROJECT:
TYNDALL AFB
CONSTRUCT SHOPPETTE/ FOOD/CLASS6/GAS

TYNDALL, AFB
FLORIDA

DRAWING TITLE:
ELECTRICAL LIGHTING PLAN

DATE: 18 JAN 2012
SCALE: AS NOTED
SHEET: E2.01
DRAWING PROJECT NO. 0941-09-000003

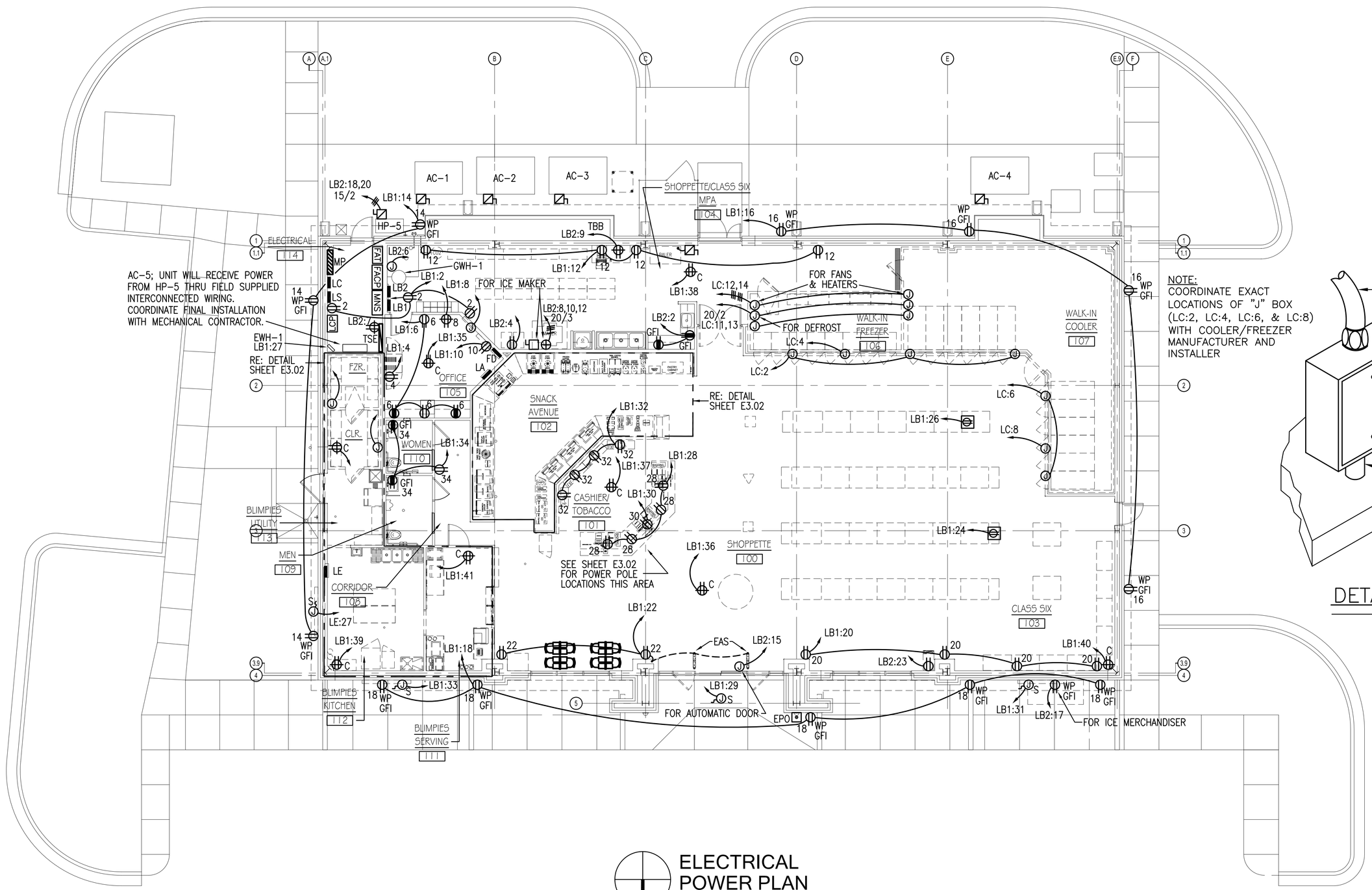

NOTE:
COORDINATE EXACT LOCATIONS OF "J" BOX (LC:2, LC:4, LC:6, & LC:8) WITH COOLER/FREEZER MANUFACTURER AND INSTALLER

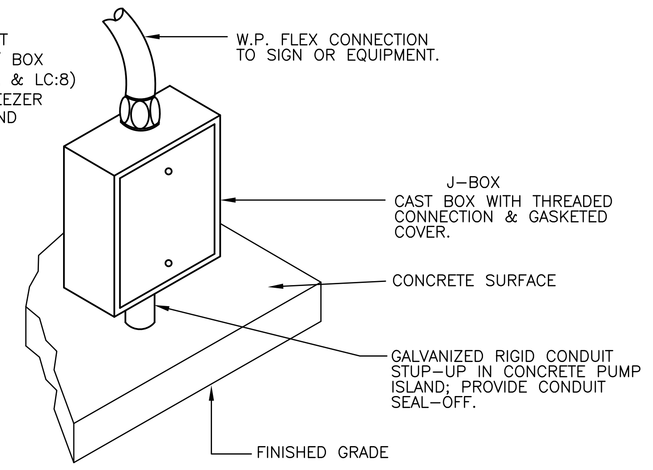

DETAIL–OUTDOOR JUNCTION BOX
NO SCALE

ELECTRICAL POWER PLAN
SCALE: 1/8" = 1'-0"

NOTES:
1. BOXES FOR CAMERAS MOUNTED FLUSH IN UNDERSIDE OF CANOPY.
2. 1" ELECTRICAL CONDUIT TO ROOF JOIST ABOVE CEILING IN RETAIL SALES.

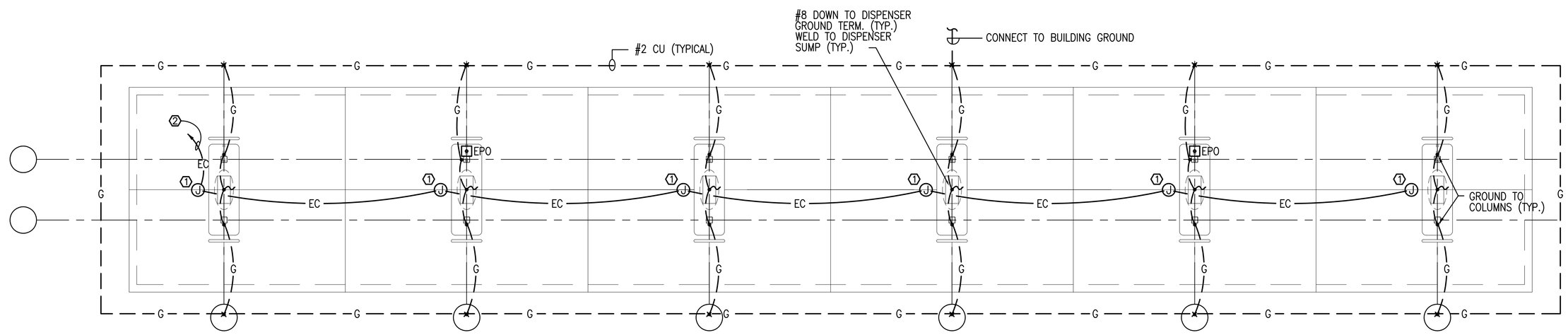

AAFES Real Estate Directorate
AAFES (RE-C) P.O.BOX 660320 DALLAS, TX 75266-0320

KEY PLAN:

DATE	REVISION NO. & DESCRIPTION	BY

PARSONS WIBLE BRUMMAL ALKIRE / ARCHITECTS INC.
MONTGOMERY, ALABAMA

DESIGN BY: AB
CHECKED BY: MR
RECOMMENDED: DATE
APPROVED: DATE

ARMY & AIR FORCE EXCHANGE SERVICE
DEPARTMENTS OF THE ARMY & AIR FORCE

RE-C
REAL ESTATE DIRECTORATE

PROJECT:
TYNDALL AFB
CONSTRUCT SHOPPETTE/ FOOD/CLASS6/GAS

TYNDALL, AFB
FLORIDA

DRAWING TITLE:
ELECTRICAL POWER PLAN

DATE:	SCALE:	SHEET:
18 JAN 2012	AS NOTED	E3.01

DRAWING PROJECT NO.
0941-09-000003

PANEL:LE

VOLTS: 208Y/120V, 3PH.,4 WIRE
MOUNTING: SURFACE
MAIN: 225 MLO
BUS: 225 AIC: 10K

EQUIPMENT SERVED:	CKT.	BKR	VA PHASE A	VA PHASE B	VA PHASE C	BKR	CKT.	EQUIPMENT SERVED:
MEAT CASE	1	15/1	780	1440		15/1	2	DRESSING STATION
SOUP MERCHANDISER	3	15/1		1200	1000	20/1	4	MENU BOARD
MANUAL SLICER	5	15/1			840	1728	20/1	6	ICE MACHINE
AUTO–SLICER	7	15/1	840	1200		20/1	8	P.O.S. TERMINAL
SANDWICH PRESS	9	15/1		1800	2400	20/1	10	MICROWAVE OVEN
BREAD OVEN	11	50/2			4800	180	20/1	12	PEPSI DISPENSER
↓	13	↓	4800	180		20/1	14	PEPSI DISPENSER
COOLER COND.	15	40/3		3603	3603	40/3	16	FREEZER COND
↓	17	↓			3603	3603	↓	18	↓
↓	19	↓	3603	3603		↓	20	↓
COOLER EVAP.	21	15/2		905	947	15/2	22	FREEZER EVAP.
↓	23	↓			905	947	↓	24	↓
LIGHTS	25	20/1	1030	–		20/1	26	FF–1
EXTERIOR SIGN	27	20/1		600	–	20/1	28	SPARE
SPARE	29	20/1			–	–	20/1	30	SPARE
BUSSED SPACE	31		–	–			32	BUSSED SPACE
↓	33			–	–		34	↓
↓	35				–	–	36	↓
↓	37		–	–			38	↓
↓	39			–	–		40	↓
↓	41				–	–	42	↓
SUBTOTALS			18652	17138	16606			

TOTAL VA – 52396

BLIMPIE EQUIPMENT CIRCUITING SCHEDULE

CONTRACTOR TO VERIFY ALL UTILITY REQUIREMENTS

ITEM	QTY	DESCRIPTION	SUPPLIED BY	INSTALLED BY	VOLTS	ø	AMPS	CIRCUIT NUMBER	CONDUCTORS	CONDUIT	NOTES
25	1	32" MEAT CASE	BLIMPIE	G.C.	115	1	6.5	LE:1	2#12, 1#12G	1/2"	NEMA 5–15P
28	1	60" DRESSING STATION	BLIMPIE	G.C.	115	1	12.0	LE:2	2#12, 1#12G	1/2"	NEMA 5–15P
32	1	MANUAL SLICER	BLIMPIE	G.C.	115	1	7.0	LE:5	2#12, 1#12G	1/2"	NEMA 5–15P
33	1	AUTO SLICER W/ VEG. HOPPER	BLIMPIE	G.C.	115	1	7.0	LE:7	2#12, 1#12G	1/2"	NEMA 5–15P
40	1	P.O.S. TERMINAL	RDS	G.C.	120	1	–	LE:8	2#12, 1#12G	1/2"	–
44	1	SOUP MERCHANDISER	BLIMPIE	G.C.	120	1	10.0	LE:3	2#12, 1#12G	1/2"	NEMA 5–15P
47	1	SANDWICH PRESS	BLIMPIE	G.C.	120	1	15.0	LE:9	2#12, 1#12G	1/2"	NEMA 5–15P
48	1	MICROWAVE OVEN	BLIMPIE	G.C.	120	1	20.0	LE:10	2#12, 1#12G	1/2"	NEMA 5–20P
49	1	MENU BOARD	BLIMPIE	G.C.	–	–	–	LE:4	–	–	–
53	1	BREAD OVEN	BLIMPIE	G.C.	120/208	1	40.0	LE:11,13	3#8, 1#10G	1"	DIRECT WIRED W/ NEUTRAL
54	2	PEPSI DISPENSER	PEPSI	DISTRIB.	120	1	1.5	LE:12	2#12, 1#12G	1/2"	NEMA 5–15P
						1	1.5	LE:14	2#12, 1#12G	1/2"	NEMA 5–15P
56	1	ICE MACHINE W/ BIN	BLIMPIE	G.C.	115	1	14.4	LE:6	2#12, 1#12G	1/2"	NEMA 5–15P
90	1	WALK–IN COOLER	BLIMPIE	G.C.	208	3	30	LE:15,17,19	3#10, 1#10G	1"	DIRECT WIRED
				G.C.	208	1	8.7	LE:21,23	2#12, 1#12G	1/2"	DIRECT WIRED
89	1	WALK–IN FREEZER	BLIMPIE	G.C.	208	3	30	LE:16,18,20	3#10, 1#10G	1"	DIRECT WIRED
				G.C.	208	1	9.1	LE:22,24	2#12, 1#12G	1/2"	DIRECT WIRED

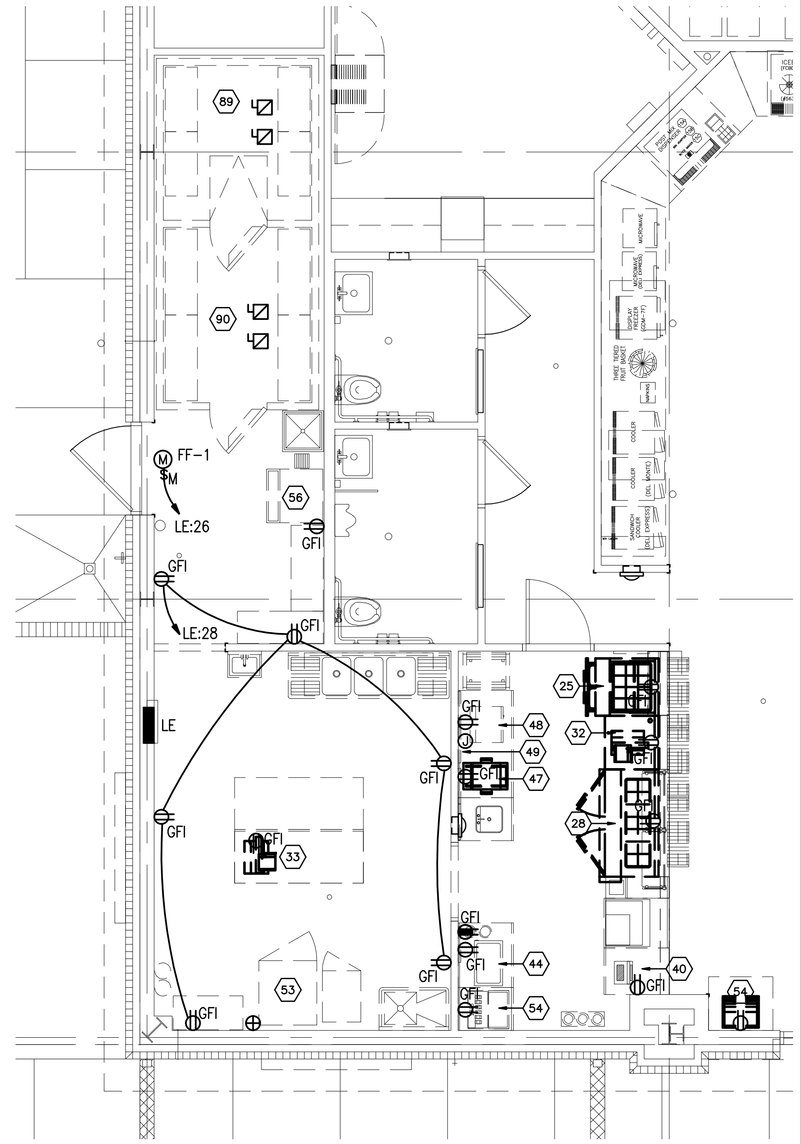

LARGE SCALE BLIMPIE POWER PLAN

SCALE: 1/4" = 1'-0"

NORTH

PANEL:LA

VOLTS: 208Y/120V, 3PH.,4 WIRE
MOUNTING: SURFACE
MAIN: 225 MLO
BUS: 225 AIC: 10K

EQUIPMENT SERVED:	CKT.	BKR	VA PHASE A	VA PHASE B	VA PHASE C	BKR	CKT.	EQUIPMENT SERVED:
COFFEE BREWER	1	40/2	3000	3600		40/2	2	FROZEN BEV. DISPENSER
↓	3	↓		3000	3600	↓	4	↓
U.C. REFRIG.	5	20/1			1800	3600	40/2	6	FROZEN BEV. DISPENSER
U.C. REFRIG.	7	20/1	1800	3600		↓	8	↓
U.C. REFRIG.	9	20/1		1800	1680	20/1	10	ICED TEA BREWER
SPARE	11	20/1			–	–	20/1	12	SPARE
U.C. FREEZER	13	20/1	1800	–		20/1	14	SPARE
ICE CREAM FREEZER	15	20/1		540	2080	25/2	16	ICE MAKER
CHILI & CHEESE DISP	17	20/1			204	2080	↓	18	↓
CHEESE DISP	19	20/1	204	1000		20/1	20	LTD. 'SNACK AVE.' SIGN
CAPPUCCINO DISPENSER	21	20/1		1800	–	20/1	22	SPARE
HOT BEV. DISPENSER	23	20/1			1800	1896	20/1	24	MICROWAVE
SPARE	25	20/1	–	1896		20/1	26	MICROWAVE
SPARE	27	20/1		–	432	20/1	28	REACH IN FREEZER
FROZEN COFFEE	29	20/1			1800	–	20/1	30	SPARE
POST MIX	31	20/1	1800	–		20/1	32	SPARE
DELI EXPRESS HOT	33	20/1		636	1800	20/1	34	SANDWICH COOLER
DELI EXPRESS HOT	35	20/1			636	1800	20/1	36	SANDWICH COOLER
HOT DOG GRILL	37	20/1	1320	1800		20/1	38	SANDWICH COOLER
HOT DOG GRILL	39	20/1		1320	–	20/1	40	SPARE
HOT DOG GRILL	41	20/1			1320	240	20/1	42	CREAM MACHINE
SUBTOTALS			21820	18688	17176			

TOTAL VA – 57684

SNACK AVENUE EQUIPMENT CIRCUITING SCHEDULE

CONTRACTOR TO VERIFY ALL UTILITY REQUIREMENTS

ITEM	QTY	DESCRIPTION	SUPPLIED BY	INSTALLED BY	VOLTS	ø	AMPS	CIRCUIT NUMBER	CONDUCTORS	CONDUIT	NOTES
8	1	COFFEE BREWER	AAFES	VENDOR	120/240	1	25	LA:1,3	2#12, 1#12G	1/2"	
9	1	CAPPUCCINO DISPENSER	AAFES	VENDOR	120	1	15	LA:21	2#12, 1#12G	1/2"	W/CORD & PLUG
10	1	HOT BEVERAGE DISPENSER	AAFES	VENDOR	120	1	15	LA:23	2#12, 1#12G	1/2"	
11	1	ICED TEA BREWER	AAFES	VENDOR	120	1	14	LA:10	2#12, 1#12G	1/2"	
13	1	FROZEN COFFEE	AAFES	VENDOR	120	1	15	LA:29	2#12, 1#12G	1/2"	
14a	2	FROZEN CARBO. BEV. COUNTERTOP	AAFES	G.C.	240	1	30	LA:2,4	2#12, 1#12G	1/2"	W/CORD & PLUG
							30	LA:6,8	2#12, 1#12G	1/2"	
15a	1	POST MIX: 8 HEAD	VENDOR	VENDOR	115	1	15	LA:31	2#12, 1#12G	1/2"	W/CORD & PLUG
15c	1	ICE MAKER	VENDOR	VENDOR	208	1	20	LA:16,18	2#12, 1#12G	1/2"	
16a	1	MICROWAVE	AAFES	AAFES	120	1	15.8	LA:24	2#12, 1#12G	1/2"	W/CORD & PLUG
16b	1	MICROWAVE	VENDOR	AAFES	120	1	15.8	LA:26	2#12, 1#12G	1/2"	W/CORD & PLUG
18	1	DISPLAY FREEZER REACH IN	AAFES	AAFES	115	1	3.6	LA:28	2#12, 1#12G	1/2"	
20a	1	SANDWICH COOLER	VENDOR	AAFES	115	1	15	LA:34	2#12, 1#12G	1/2"	W/CORD & PLUG
20b	1	SANDWICH COOLER	VENDOR	AAFES	115	1	15	LA:36	2#12, 1#12G	1/2"	
20c	1	SANDWICH COOLER	AAFES	AAFES	115	1	15	LA:38	2#12, 1#12G	1/2"	
22a	1	GEHLS CHILLI & CHEESE DISP	VENDOR	AAFES	120	1	1.7	LA:17	2#12, 1#12G	1/2"	W/CORD & PLUG
22b	1	CHEESE DISP	VENDOR	AAFES	120	1	1.7	LA:19	2#12, 1#12G	1/2"	W/CORD & PLUG
23	2	DELI EXPRESS HOT TO GO	VENDOR	AAFES	120	1	5.3	LA:33	2#12, 1#12G	1/2"	
							5.3	LA:35	2#12, 1#12G	1/2"	
24a	3	HOT DOG GRILL	AAFES	AAFES	120	1	11	LA:37	2#12, 1#12G	1/2"	
							11	LA:39	2#12, 1#12G	1/2"	
							11	LA:41	2#12, 1#12G	1/2"	
25	1	CREAM MACHINE	VENDOR	AAFES	115	1	2	LA:42	2#12, 1#12G	1/2"	
31	1	ICE CREAM FREEZER	VENDOR	AAFES	120	1	4.5	LA:15	2#12, 1#12G	1/2"	W/CORD & PLUG
32	3	UNDERCOUNTER DRAWER REFRIG.	AAFES	AAFES	115	1	15	LA:5	2#12, 1#12G	1/2"	
							15	LA:7			
							15	LA:9			
33	1	UNDERCOUNTER DRAWER FREEZER	AAFES	AAFES	115	1	15	LA:13	2#12, 1#12G	1/2"	

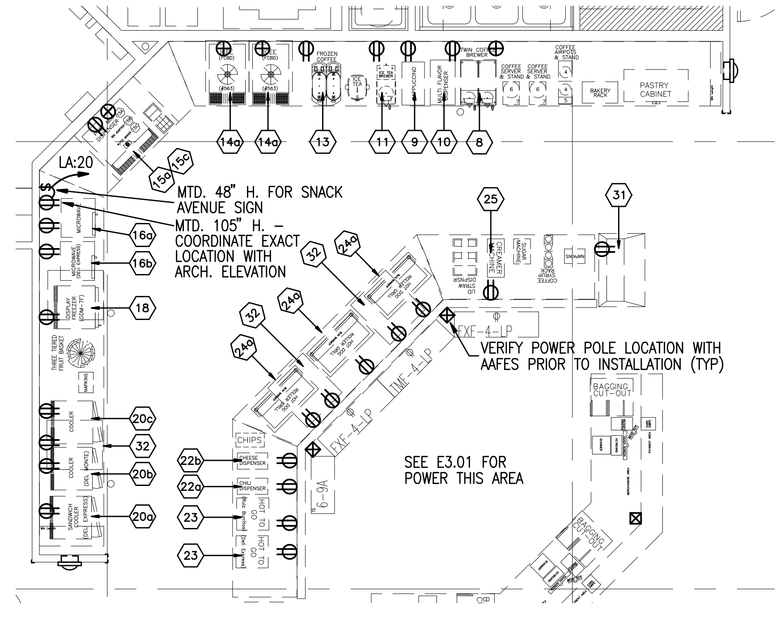

LARGE SCALE SNACK AVENUE POWER PLAN

SCALE: 1/4" = 1'-0"

NORTH

AAFES Real Estate Directorate

AAFES (RE–C) P.O.BOX 660320 DALLAS, TX 75266–0320

KEY PLAN:

DATE	REVISION NO. & DESCRIPTION	BY

ALABAMA REGISTERED PROFESSIONAL ENGINEER MARK L. REDDEN 1/18/2012

PARSONS WIBLE BRUMMAL ALKIRE / ARCHITECTS INC.
MONTGOMERY, ALABAMA

DESIGN BY: AB
CHECKED BY: MR

RECOMMENDED: DATE
APPROVED: DATE

ARMY & AIR FORCE EXCHANGE SERVICE
DEPARTMENTS OF THE ARMY & AIR FORCE

RE-C
REAL ESTATE DIRECTORATE

PROJECT:
TYNDALL AFB
CONSTRUCT SHOPPETTE/ FOOD/CLASS6/GAS

TYNDALL, AFB
FLORIDA

DRAWING TITLE:
LARGE SCALE FOOD SERVICE POWER PLANS

DATE:	SCALE:	SHEET:
18 JAN 2012	AS NOTED	E3.02

DRAWING PROJECT NO.
0941–09–000003

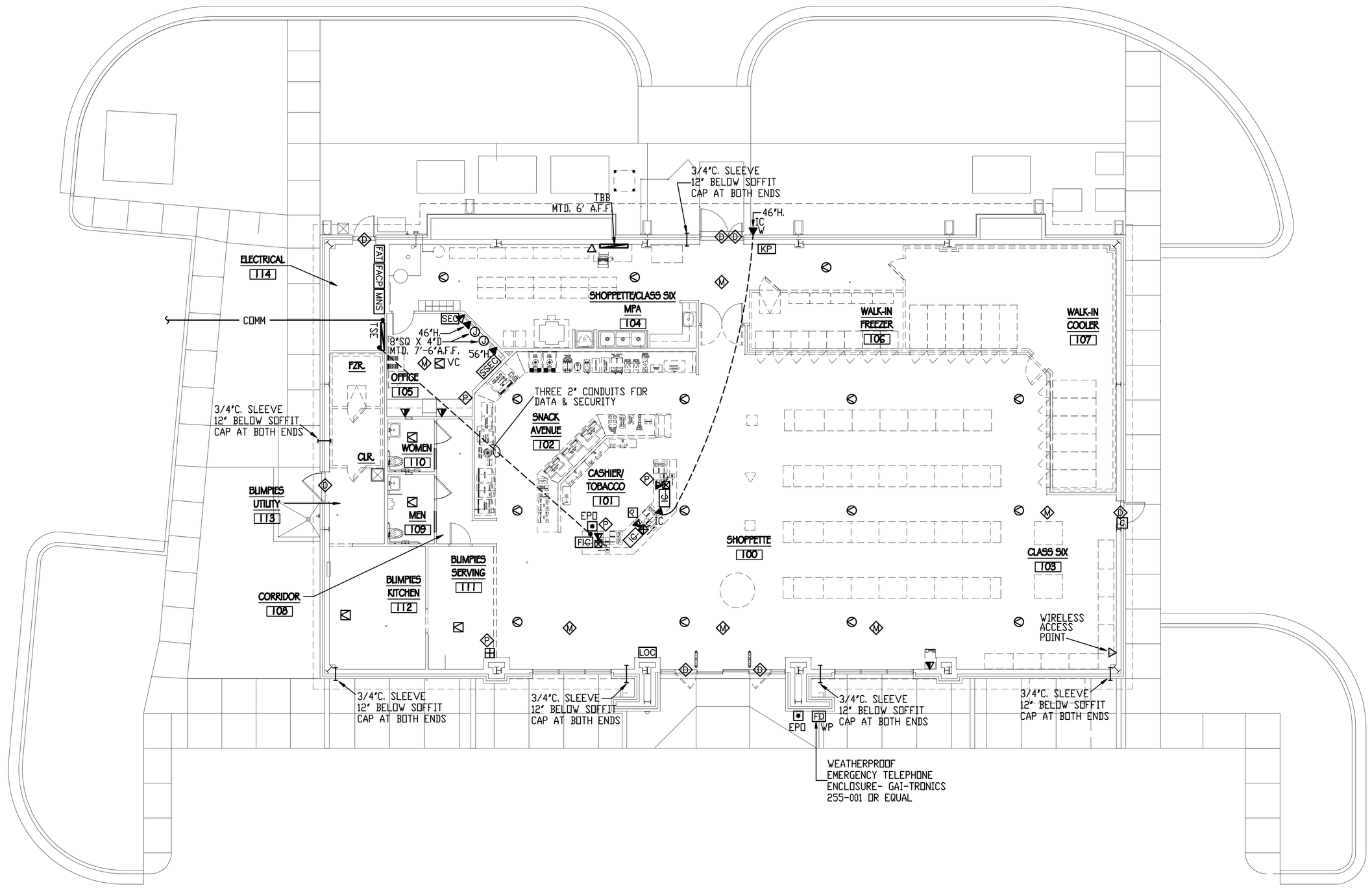

NORTH

ELECTRICAL COMMUNICATIONS PLAN

SCALE: 1/8" = 1'-0"

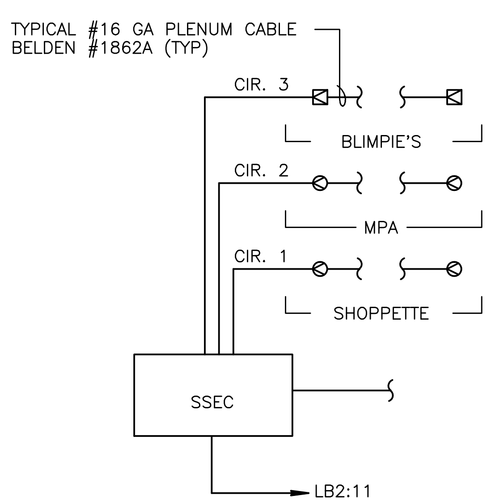

1 SOUND SYSTEM RISER DIAGRAM

SCALE: NTS

NOTE:

SOUND SYSTEM EQUIPMENT (AMPLIFIERS, SPEAKERS, RACKS) WILL BE FURNISHED BY AAFES INSTALLED BY CONTRACTOR.

1. COORDINATE EXACT LOCATION WITH AAFES. SEE PLANS FOR EXACT NUMBER AND TYPES OF DEVICES.

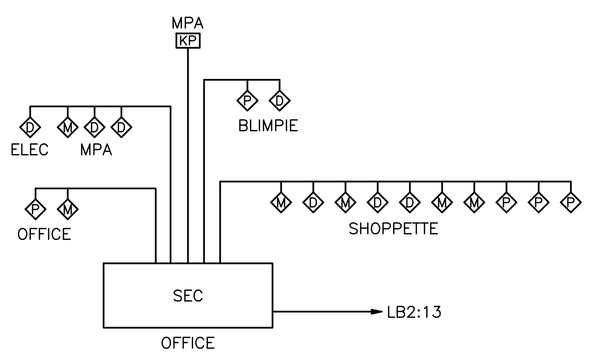

2 SECURITY SYSTEM RISER DIAGRAM

SCALE: NTS

NOTES:

1. SECURITY SYSTEM TO BE FURNISHED AND INSTALLED BY OTHERS; CONTRACTOR TO PROVIDE RACEWAYS AND BOXES AS SHOWN.
2. DEVICE LOCATIONS SHOWN ON PLANS ARE REPRESENTATIVE OF THE DESIRED SYSTEM; COORD. LOCATIONS W/ PROJ. MANAGER PRIOR TO ROUGH-IN.

CONTACT POINTS
JOE WILLIAMS
850-283-2286
JEFF McGUIRE
850-283-3801

FACILITY TELECOMMUNICATIONS BONDING BACKBONE INSTALLATION AND TELECOMMUNICATION MAIN AND/OR GROUNDING BUSBAR AND ALL CONNECTED GROUND WIRING SHALL COMPLY WITH ANSI/J-STD-607-A.

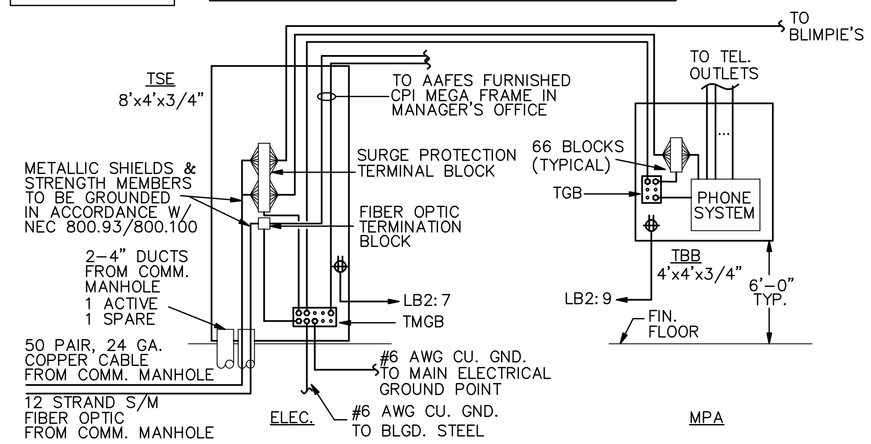

3 TELECOMMUNICATIONS RISER

SCALE: NTS

NOTE: LAYOUT AND QUANTITIES OF COMPONENTS ON BACKBOARDS ARE REPRESENTATIVE ONLY AND NOT TO BE USED FOR INSTALLATION. ACTUAL INSTALLATION TO BE PER SYSTEM SUPPLIER'S REQUIREMENTS AND CURRENT EIA/TIA PRACTICES.

AAFES
Real Estate Directorate
AAFES (RE-C) P.O.BOX 660320 DALLAS, TX 75266-0320

KEY PLAN:

[redacted]

DATE	REVISION NO. & DESCRIPTION	BY

ALABAMA REGISTERED PROFESSIONAL ENGINEER MARK L. REDDEN 27872972

PARSONS WIBLE BRUMMAL ALKIRE / ARCHITECTS INC.
MONTGOMERY, ALABAMA

DESIGN BY: JR

CHECKED BY: MR

RECOMMENDED: DATE

APPROVED: DATE

[redacted]

ARMY & AIR FORCE EXCHANGE SERVICE
DEPARTMENTS OF THE ARMY & AIR FORCE

RE-C
REAL ESTATE DIRECTORATE

[redacted]

PROJECT:
TYNDALL AFB
CONSTRUCT SHOPPETTE/
FOOD/CLASS6/GAS

TYNDALL, AFB
FLORIDA

DRAWING TITLE:
ELECTRICAL
COMMUNICATIONS
PLAN

DATE:	SCALE:	SHEET:
18 JAN 2012	AS NOTED	E4.01

DRAWING PROJECT NO.
0941-09-000003

[redacted]

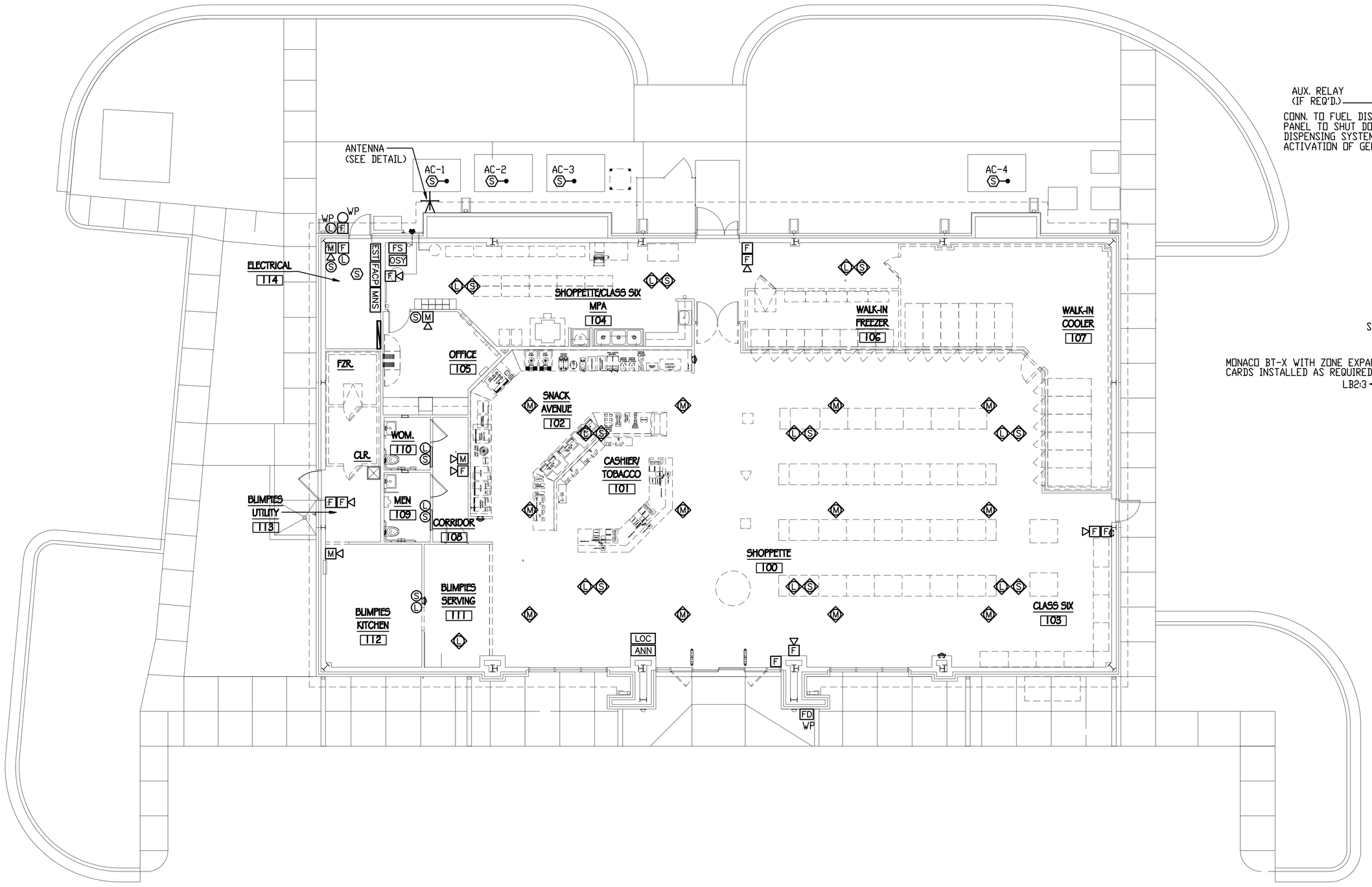

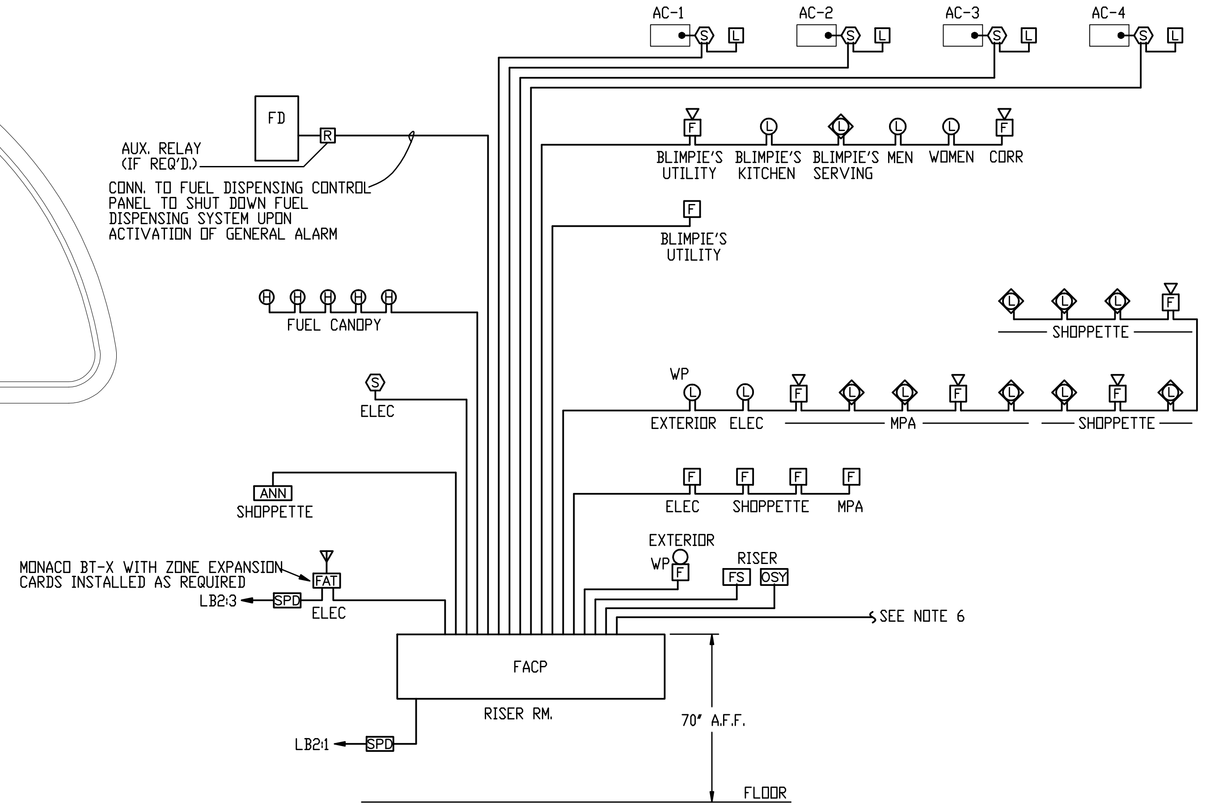

1 FIRE ALARM RISER DIAGRAM

SCALE: NTS

FIRE ALARM SYSTEM ZONES OF TRANSMISSION MATRIX	
AREA	ZONE
ELECTRICAL RM.	1
SPRINKLER SYSTEM	2
SHOPPETTE	3
MPA	4
BLIMPIES	5
AC-1	6
AC-2	7
AC-3	8
AC-4	9
SUPERVISORY TROUBLE	10
SYSTEM TROUBLE	11

FIRE ALARM SYSTEM NOTES:

1. FIRE ALARM SYSTEM SHOP DRAWINGS SHALL BE SUPERVISED BY A PROFESSIONAL ENGINEER AND SHALL INCLUDE SIGNATURE & STAMP.
2. INSTALLER SHALL BE CERTIFIED WITH MINIMUM 3 YEARS EXPERIENCE WITH INSTALLATIONS OF COMPARABLE SIZE AND COMPLEXITY.
3. INSTALLER TO FILL OUT ALL NECESSARY FORMS PER NFPA-72 AND SUBMIT TO FIRE DEPARTMENT.
4. TEST AND DEMONSTRATE FUNCTIONALITY OF SYSTEM IN PRESENCE OF FIRE DEPARTMENT UPON COMPLETION OF WORK.
5. PROVIDE ORIENTATION AND TRAINING FOR FIRE DEPARTMENT.
6. OBTAIN CERTIFICATE OF ACCEPTANCE FROM FIRE DEPARTMENT UPON COMPLETION OF TESTING AND CERTIFICATION.
7. PROVIDE INTERFACE FROM MASS NOTIFICATION SYSTEM CONTROLLER TO 'FACP' FOR ALARM SILENCE FUNCTION DURING EMERGENCY ALERTS.
8. FIRE ALARM SYSTEM SHALL BE ADDRESSABLE TYPE AND COMPATIBLE WITH MONACO D21 SYSTEM. CONTROL PANEL AND PULL STATIONS SHALL BE KEYED ALIKE.
9. PROVIDE COMPUTER SOFTWARE TO TROUBLESHOOT AND FOR ADDING AND DELETING DEVICES IN FUTURE. TRANSFER LICENSE UNCONDITIONALLY TO FIRE DEPARTMENT, INCLUDING ALL REQUIRED HARDWARE AND PASSWORDS FOR TROUBLESHOOTING AND EDITING THE SYSTEM AS INDICATED.
10. LOCATE REMOTE DUCT DETECTOR LIGHT/TEST STATIONS AS DIRECTED BY OWNER.
11. COMPLY WITH UFC 3-600-01 FOR DESIGN AND O&M OF FIRE ALARM SYSTEM. AND PROVIDE INTEROPERABILITY WITH M.N.S. PER UFC 4-021-01.
12. PROVIDE 600 OHM TELEPHONE INPUT FOR PUBLIC ADDRESS.

FIRE ALARM and SECURITY FLOOR PLAN

SCALE: 1/8"=1'-0"

NORTH

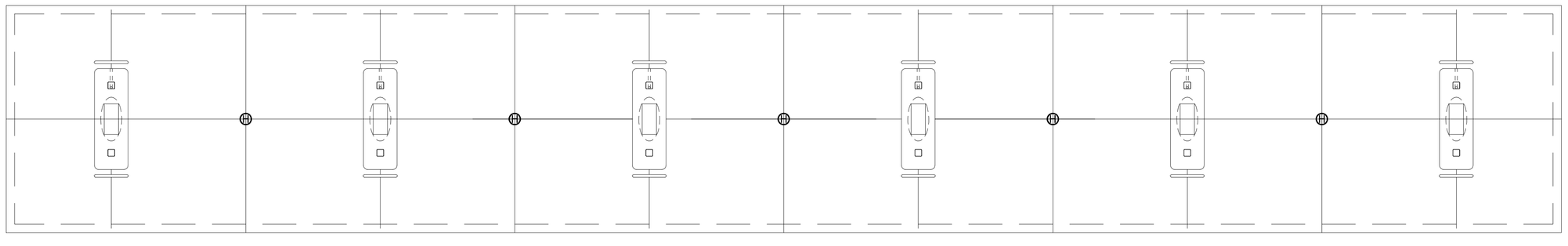

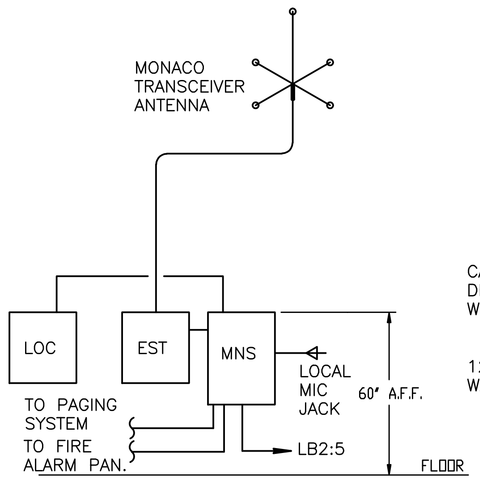

2 MASS NOTIFICATION SYSTEM RISER DIAGRAM

SCALE: NTS

MASS NOTIFICATION SYSTEM NOTES:

1. INDIVIDUAL BUILDING MASS NOTIFICATION BT-X SYSTEMS TO INTEROPERATE THROUGH MONACO D21 ESRI FACILITY FIRE ALARM PER UFC 4-021-01.
2. PROVIDE 600 OHM TELEPHONE INPUT FOR PUBLIC ADDRESS.

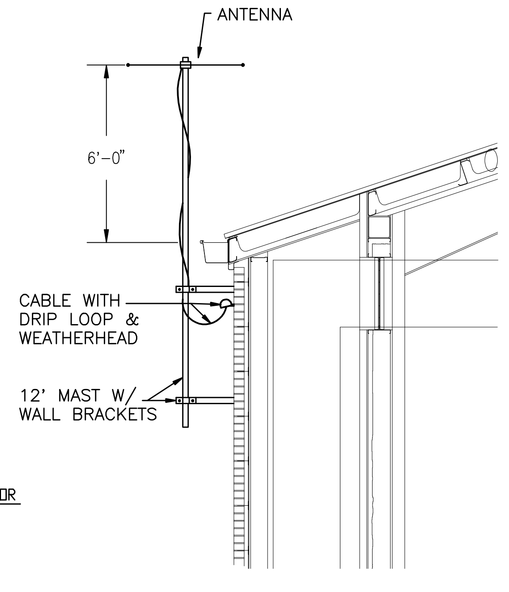

4 ANTENNA DETAIL

SCALE: NTS

AAFES Real Estate Directorate

AAFES (RE-C) P.O.BOX 660320 DALLAS, TX 75266-0320

KEY PLAN:

[redacted]

DATE	REVISION NO. & DESCRIPTION	BY

ALABAMA REGISTERED PROFESSIONAL ENGINEER MARK L. REDDEN 1/18/2012

PARSONS WIBLE BRUMMAL ALKIRE / ARCHITECTS INC.
MONTGOMERY, ALABAMA

DESIGN BY: MR

CHECKED BY: MR

RECOMMENDED: DATE

APPROVED: DATE

[redacted]

ARMY & AIR FORCE EXCHANGE SERVICE
DEPARTMENTS OF THE ARMY & AIR FORCE

RE-C
REAL ESTATE DIRECTORATE

[redacted]

PROJECT:
TYNDALL AFB
CONSTRUCT SHOPPETTE/
FOOD/CLASS6/GAS

TYNDALL, AFB
FLORIDA

DRAWING TITLE:
EMERGENCY
PROTECTION
SYSTEM PLAN

DATE:	SCALE:	SHEET:
18 JAN 2012	AS NOTED	E5.01

DRAWING PROJECT NO.
0941-09-000003

[redacted]

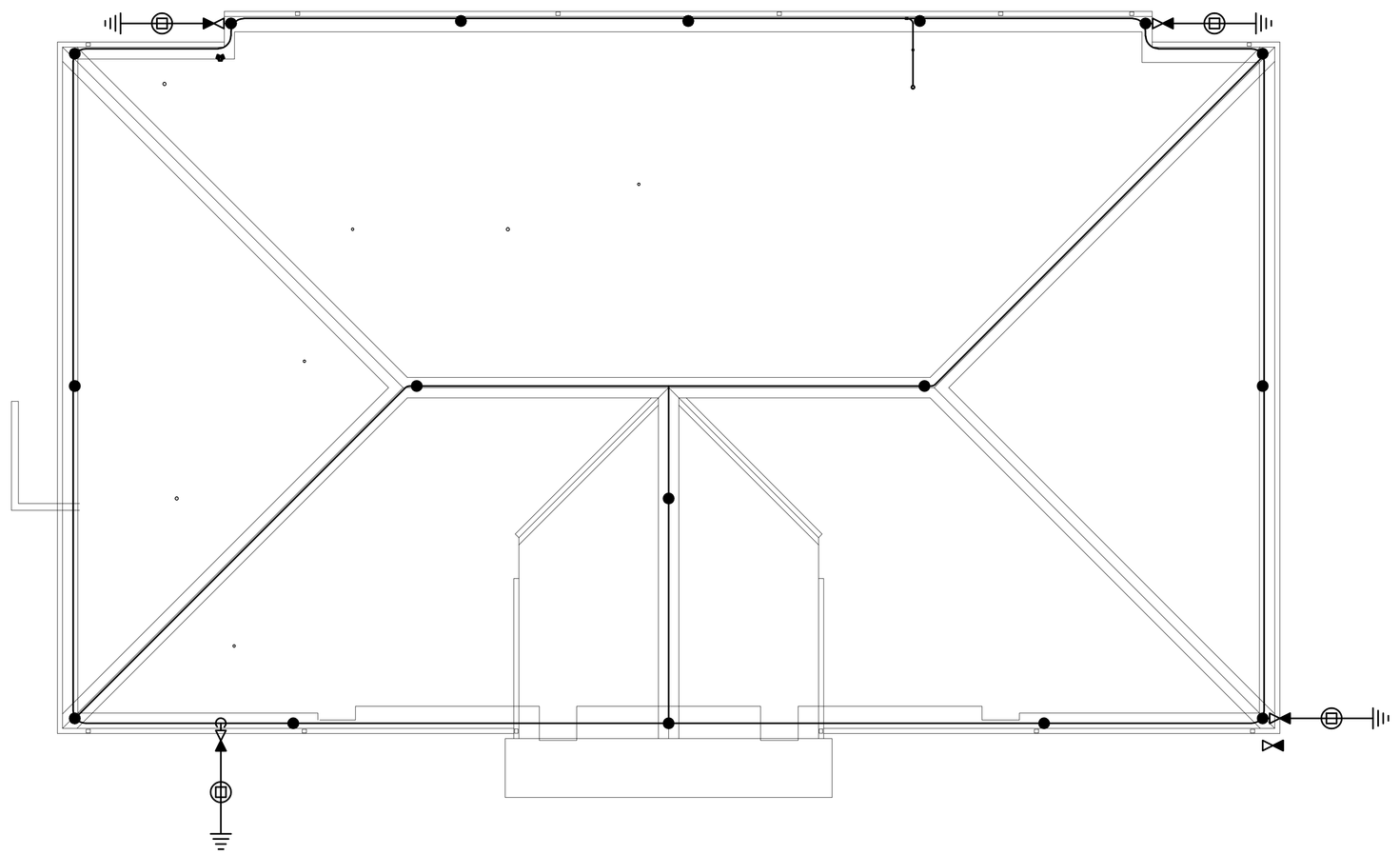

NORTH

LIGHTNING PROTECTION SYSTEM PLAN
SCALE: 1/8" = 1'-0"

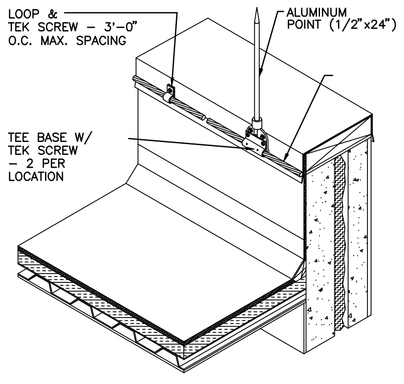

Ⓐ TYPICAL PARAPET AIR TERMINAL
N.T.S.

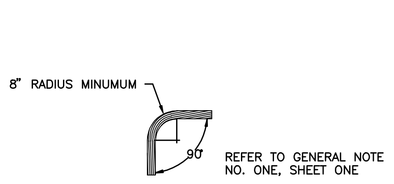

Ⓒ TYPICAL BEND RADIUS
N.T.S.

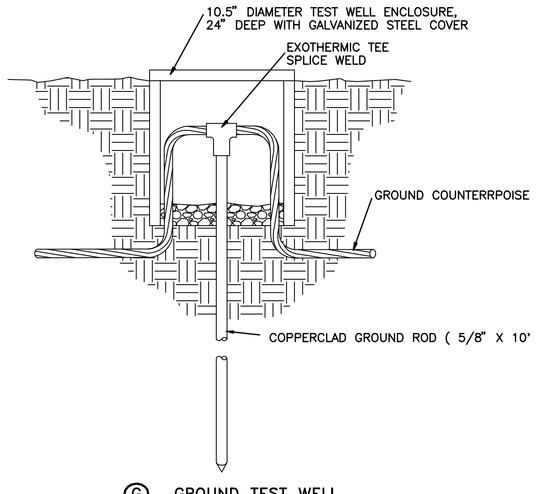

Ⓖ GROUND TEST WELL
N.T.S.

LEGEND
- 24" ALUMINUM AIR TERMINAL
- ALUMINUM ROOF CONDUCTOR
- ALUMINUM UNDERGROUND CONDUCTOR
- VERTICAL TRANSITION OR DOWNLEAD
- WELDED OR BRAZED GROUND CONNECTION
- COMPRESSION TYPE GROUND FITTING CONNECTION IN TEST WELL.
- 10 FT. SECTIONAL COPPER GROUND ROD
- BI–METALLIC TRANSITION FITTING

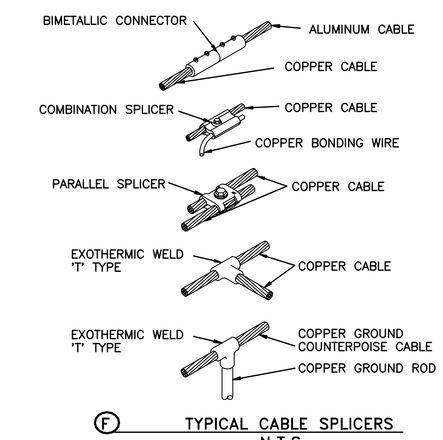

Ⓕ TYPICAL CABLE SPLICERS
N.T.S.

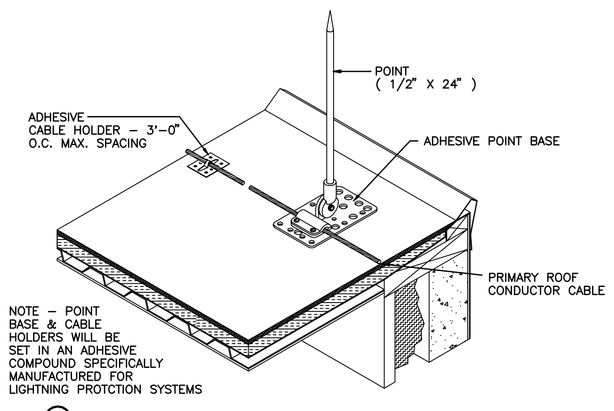

Ⓑ TYPICAL ADHESIVE BASED AIR TERMINAL
N.T.S.

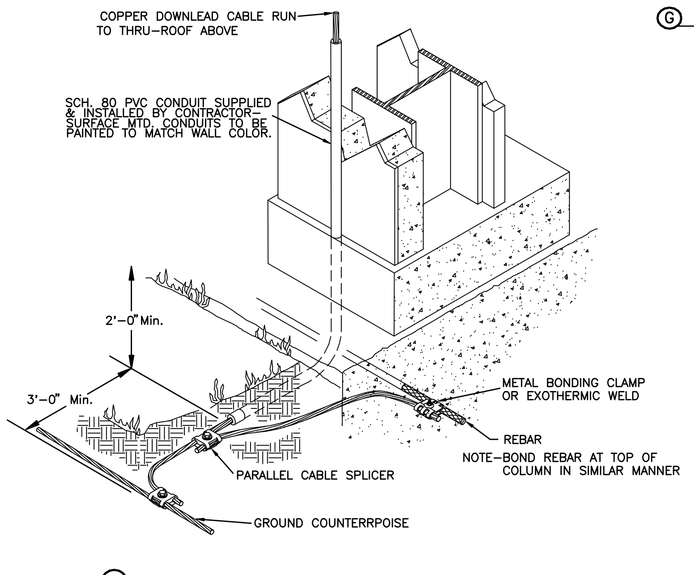

Ⓓ TYPICAL DOWNLEAD, REBAR BOND & GROUND
N.T.S.

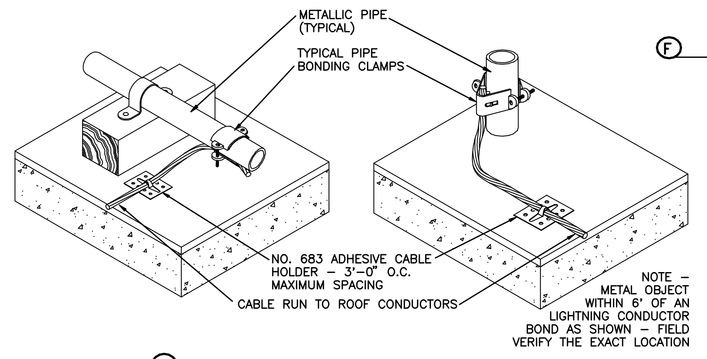

Ⓔ TYPICAL MISCELLANEOUS PIPE BOND
N.T.S.

LIGHTNING PROTECTION NOTES
1. PRIMARY ROOF CONDUCTORS SHALL BE ALUMINUM, DOWN CONDUCTORS AND GROUND LEADS SHALL BE COPPER.
2. SECONDARY CONDUCTORS CONNECTING FROM PRIMARY ROOF CONDUCTOR TO AIR TERMINALS OR BONDING METAL PARTS RISING FROM THE ROOF SHALL BE ALUMINUM.
3. USE MANUFACTURER RECOMMENDED CLAMPS, SPLICES, PLATES & BONDING LUGS FOR THE CONDUCTORS AND AIR TERMINALS INSTALLED.
4. ANY METAL OBJECT PROTRUDING ABOVE ROOF WITHIN 6FT. OF AN AIR TERMINAL OR A PRIMARY CONDUCTOR IS TO BE APPROPRIATELY BONDED.
5. CONNECTIONS TO GROUND RODS ARE TO BE EXOTHERMIC WELDS, BRAZED OR COMPRESSION FITTINGS. GROUND ROD RESISTANCE SHALL BE 25 OHMS OR LESS.
6. ALL DOWN CONDUCTORS ARE TO BE COPPER AND SHALL BE INSTALLED INSIDE OF PVC SCHEDULE 80 CONDUIT TO A MINIMUM OF 8FT. ABOVE FINISHED GRADE. PROVIDE BI–METAL FITTING AT ALL COPPER TO ALUMINUM TRANSITIONS.
7. CONDUCTORS ARE TO BE STABILIZED TO THE ROOF PERIODICALLY TO RESTRICT ANY MOVEMENT. CONDUCTORS SHALL NOT HAVE BENDS OF LESS THAN 90 DEGREES. BENDS IN CONDUCTORS ARE TO BE A RADIUS OF 8" OR GREATER.
8. LIGHTNING RODS ARE TO EXTEND A MINIMUM OF 10" ABOVE ANY OBJECT ADJACENT TO THE ROD.
9. ALL WORK IS TO BE DONE IN ACCORDANCE WITH NFPA 70: NATIONAL ELECTRICAL CODE AND THE 2008 EDITION OF NFPA 780: STANDARD FOR INSTALLATION OF LIGHTNING PROTECTION.
10. ROOF TERMINALS ARE TO BE 1/2" DIA ALUMINUM, 24" IN LENGTH WITH A THREADED CONNECTION.
11. TEST WELLS LOCATED AT GROUND ROD CONNECTION POINTS.
12. BOND STRUCTURAL COLUMNS TO GROUND SYSTEM AT A MINIMUM OF 4 LOCATIONS. CONNECTIONS TO BUILDING STEEL SHALL BE EXOTHERMIC WELD, BRAZED OR COMPRESSION FITTINGS.

AAFES
Real Estate Directorate
AAFES (RE–C) P.O.BOX 660320 DALLAS, TX 75266–0320

KEY PLAN:

DATE	REVISION NO. & DESCRIPTION	BY

ALABAMA REGISTERED PROFESSIONAL ENGINEER MARK L. REDDEN 9/11/2012

PARSONS WIBLE BRUMMAL ALKIRE / ARCHITECTS INC.
MONTGOMERY, ALABAMA

DESIGN BY: MR
CHECKED BY: MR

RECOMMENDED: DATE
APPROVED: DATE

ARMY & AIR FORCE EXCHANGE SERVICE DEPARTMENTS OF THE ARMY & AIR FORCE

RE–C
REAL ESTATE DIRECTORATE

PROJECT:
TYNDALL AFB
CONSTRUCT SHOPPETTE/ FOOD/CLASS6/GAS

TYNDALL, AFB
FLORIDA

DRAWING TITLE:
EMERGENCY PROTECTION SYSTEM PLAN

DATE:	SCALE:	SHEET:
18 JAN 2012	AS NOTED	E6.01

DRAWING PROJECT NO.
0941–09–000003

GENERAL NOTES

1. CONTRACTOR SHALL FIELD VERIFY EXISTING CONDITIONS AND EXACT LOCATION OF ALL UTILITIES BEFORE DIGGING.
2. SEE SPECIFICATIONS FOR GENERAL, PRODUCT AND EXECUTION REQUIREMENTS.
3. ACCESS SHALL BE PROVIDED TO SITE AND FACILITY AT ALL TIMES.
4. CONTRACTOR SHALL CONDUCT OPERATIONS SO AS NOT TO CREATE NUISANCE OR HAZARD TO PUBLIC OR TRAFFIC.
5. ADEQUATE DRAINAGE SHALL BE MAINTAINED AT ALL TIMES DURING CONSTRUCTION. DITCHES OR STRUCTURES DISTURBED DURING CONSTRUCTION SHALL BE RESTORED TO ORIGINAL CONDITION. ALL STORM WATER POLLUTION PREVENTION MEASURES SHALL BE IN COMPLIANCE WITH NATIONAL POLLUTANT DISCHARGE ELIMINATION SYSTEM REQUIREMENTS.
6. CONTRACTOR SHALL PROVIDE AND INSTALL TRAFFIC CONTROL DEVICES IN ACCORDANCE WITH PART VI OF THE "MANUAL ON UNIFORM TRAFFIC CONTROL DEVICES" DURING CONSTRUCTION. CONTRACTOR SHALL INSURE ALL TRAFFIC CONTROL DEVICES ARE MAINTAINED IN CLEAN AND FUNCTIONAL CONDITION.
7. RESTORE ANY GRASSED AND LANDSCAPE AREAS DAMAGED DURING CONSTRICTION TO ORIGINAL GRADE AND CONDITION. DISTURBED AREAS SHALL BE SEEDED, MULCHED AND FERTILIZED.
8. RESTORE ANY ROADWAYS, PAVED SURFACES AND ACCESS ROUTES DAMAGED DURING CONSTRICTION TO ORIGINAL CONDITION.

FUEL SYSTEM NOTES

1. COORDINATE REMOVAL OF EXISTING DISPENSERS WITH CONSTRUCTION OF NEW FACILITY. WORK SHALL BE PERFORMED IN A SEQUENCE THAT MINIMIZES INTERRUPTION OF SERVICE. SEE GENERAL NOTES.
2. EXISTING UNDERGROUND FUEL TANKS TO REMAIN.
3. REMOVE UNDERGROUND FUEL PIPING FROM EACH UST PUMP/PIPING SUMP TO ALL DISPENSERS. REMOVE UNDERGROUND FUEL TANKS PIPING SUMPS, FILL ASSEMBLY, VAPOR RECOVERY/VENT PIPING, INTERSTITIAL ASSEMBLY AND OTHER TANK ACCESSORIES. EXCAVATE AREA ABOVE THE FUEL TANK AS NECESSARY FOR FUEL TANK UPGRADE AND PIPING REPLACEMENT. SEE SHEET T-4 FOR TANK DEMOLITION DETAILS.
4. REMOVE UNDERGROUND AND ABOVEGROUND VENT PIPING.
5. REMOVE EXISTING OBSERVATION WELL (TYP. 2).
6. REMOVE PUMP POWER WIRING AND CONDUIT FROM UNDERGROUND TANK TO DISTRIBUTION PANEL (IN KIOSK). SEE ELECTRICAL.
7. REMOVE FUEL TANK MONITORING SYSTEM PROBE AND SENSOR WIRING AND CONDUIT FROM UNDERGROUND TANKS TO VEEDER-ROOT CONSOLE (IN KIOSK).
8. REMOVE VEEDER-ROOT OVERFILL ALARM CONDUIT AND WIRING FROM AREA NEAR UST PIPING SUMPS TO VEEDER-ROOT CONSOLE. EXISTING OVERFILL ALARM TO BE REUSED.
9. REMOVE EXISTING VEEDER-ROOT TLS 450 MONITORING CONSOLE, SAVE FOR RE-INSTALLATION. INVENTORY PROBES AND SENSORS SHALL BE RE-USED. SEE NEW WORK.
10. EXISTING DISPENSER ASSEMBLIES (TYP. 3) SHALL BE REMOVED AND BE RELOCATED. DISCONNECT FUEL PIPING AND ELECTRICAL CONDUIT & WIRING FROM EXISTING DISPENSER ASSEMBLIES. STORE DISPENSER ASSEMBLIES ON-SITE AS NEEDED. REMOVE DISPENSOR SUMPS. SEE SHEET T-2.

KEY NOTES

1. EXISTING 20,000 GALLON (REGULAR) DOUBLEWALLED FIBERGLASS UNDERGROUND GASOLINE STORAGE TANK. SEE FUEL SYSTEM NOTE 2 & 3.
2. EXISTING 15,000 GALLON (PREMIUM) DOUBLEWALLED FIBERGLASS UNDERGROUND GASOLINE STORAGE TANK. SEE FUEL SYSTEM NOTE 2 & 3.
3. UNDERGROUND FIBERGLASS PRIMARY FUEL PIPING AND SECONDARY CONTAINMENT (2" AMERON LCX). SEE FUEL SYSTEM NOTE 3.
4. UNDERGROUND VENT PIPING, SEE FUEL SYSTEM NOTE 4.
5. PUMP POWER WIRING AND GALVANIZED RIGID CONDUIT. SEE FUEL SYSTEM NOTE 7.
6. VEEDER-ROOT PROBE AND SENSOR WIRING IN GALVANIZED RIGID CONDUIT. SEE FUEL SYSTEM NOTE 6.
7. VEEDER-ROOT OVERFILL ALARM WIRING AND CONDUIT, SEE NOTE 7.
8. VEEDER-ROOT TLS-450 CONSOLE. SEE NOTE 6.
9. OBSERVATION WELL (TYPICAL) TO BE REMOVED.
10. DISPENSER. SEE NOTE 1 AND 9.
11. KIOSK. SEE ARCHITECTURAL DRAWINGS.
12. DISPENSER ISLAND. SEE ARCHITECTURAL DRAWINGS.
13. FUEL FILLING STATION CANOPY, SEE ARCHITECTURAL DRAWINGS.
14. ABOVEGROUND VENTS AND OVERFILL ALARM. SEE FUEL SYSTEM NOTE 7.

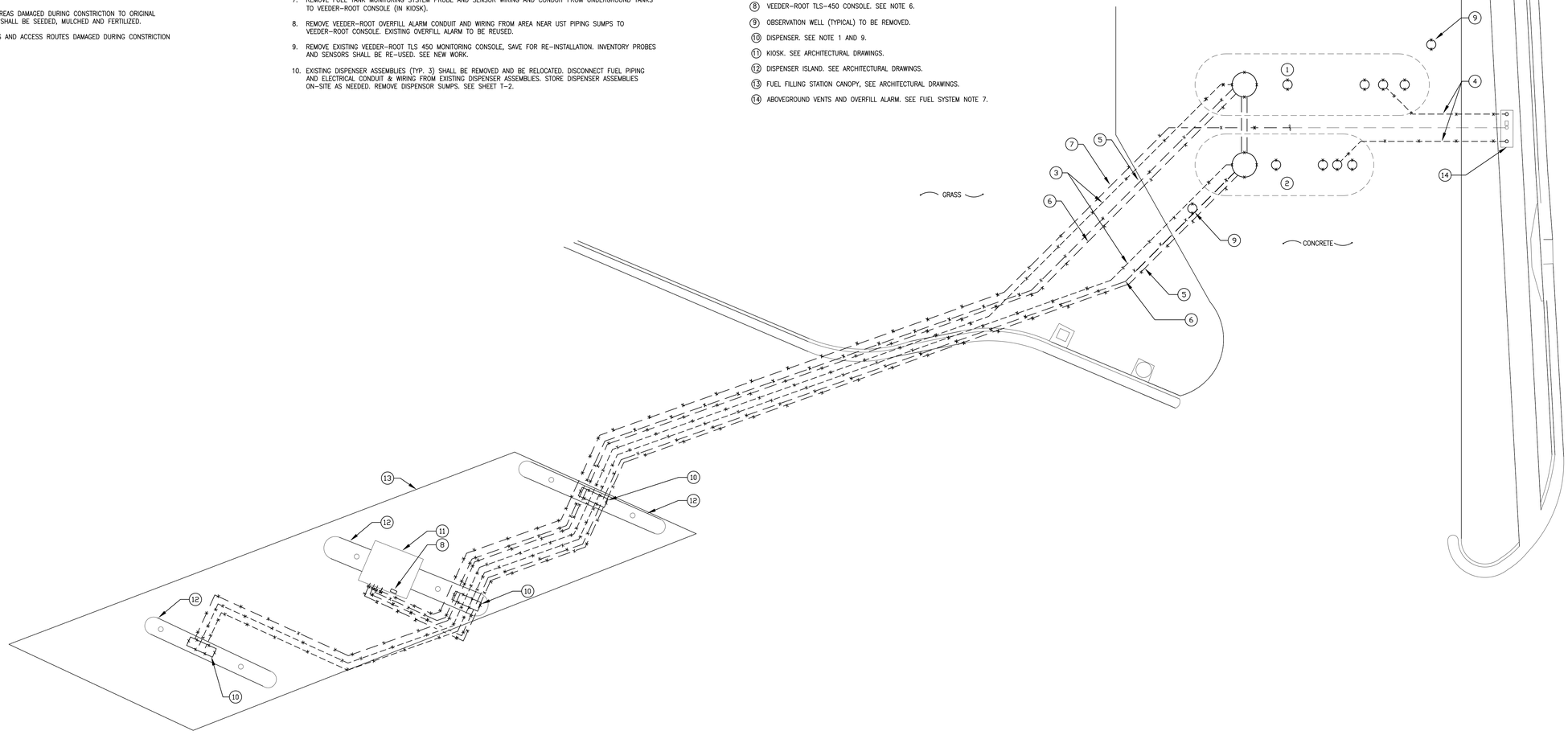

TRUE NORTH

PLAN NORTH

SCALE: 1/8" = 1'-0"

0" 4' 8' 24'

2 6 16

DEMOLITION - UNDERGROUND TANKS, PIPING AND EXISTING DISPENSERS
PLAN VIEW - TYNDALL AIR FORCE BASE

AAFES
Real Estate Directorate
AAFES (RE-C) P.O.BOX 660320 DALLAS, TX 75266-0320

KEY PLAN:

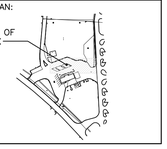

DATE	REVISION NO. & DESCRIPTION	BY
01/18/12		

CONSULTING ENGINEERS
Johnson, Spellman & Associates, Inc.
6991 Peachtree Industrial Boulevard, Building 700,
Norcross, Georgia 30092
Phone (770) 447-4555 Fax (770)246-9042
visit us at www.jsainc.com
© 2012 Johnson, Spellman & Associates, Inc.

PWBA PROJECT #290507

JAMES G. LUTHER LICENSE NO. 61744 STATE OF FLORIDA PROFESSIONAL ENGINEER

PARSONS WIBLE BRUMMAL ALKIRE / ARCHITECTS INC.
MONTGOMERY, ALABAMA

DESIGN BY: JGL
CHECKED BY: JGL
RECOMMENDED: DATE
APPROVED: DATE

ARMY & AIR FORCE EXCHANGE SERVICE
DEPARTMENTS OF THE ARMY & AIR FORCE

RE-C
REAL ESTATE DIRECTORATE

PROJECT:
TYNDALL AFB
CONSTRUCT SHOPPETTE/
FOOD/CLASS6/GAS

TYNDALL, AFB
FLORIDA

DRAWING TITLE:
PRODUCT PIPING
AND DISPENSER
DEMOLITION
PLAN VIEW

DATE:	SCALE:	SHEET:
18 JANUARY 2012	1/8" = 1'-0"	T-1
DRAWING PROJECT NO. 0941-09-000003		

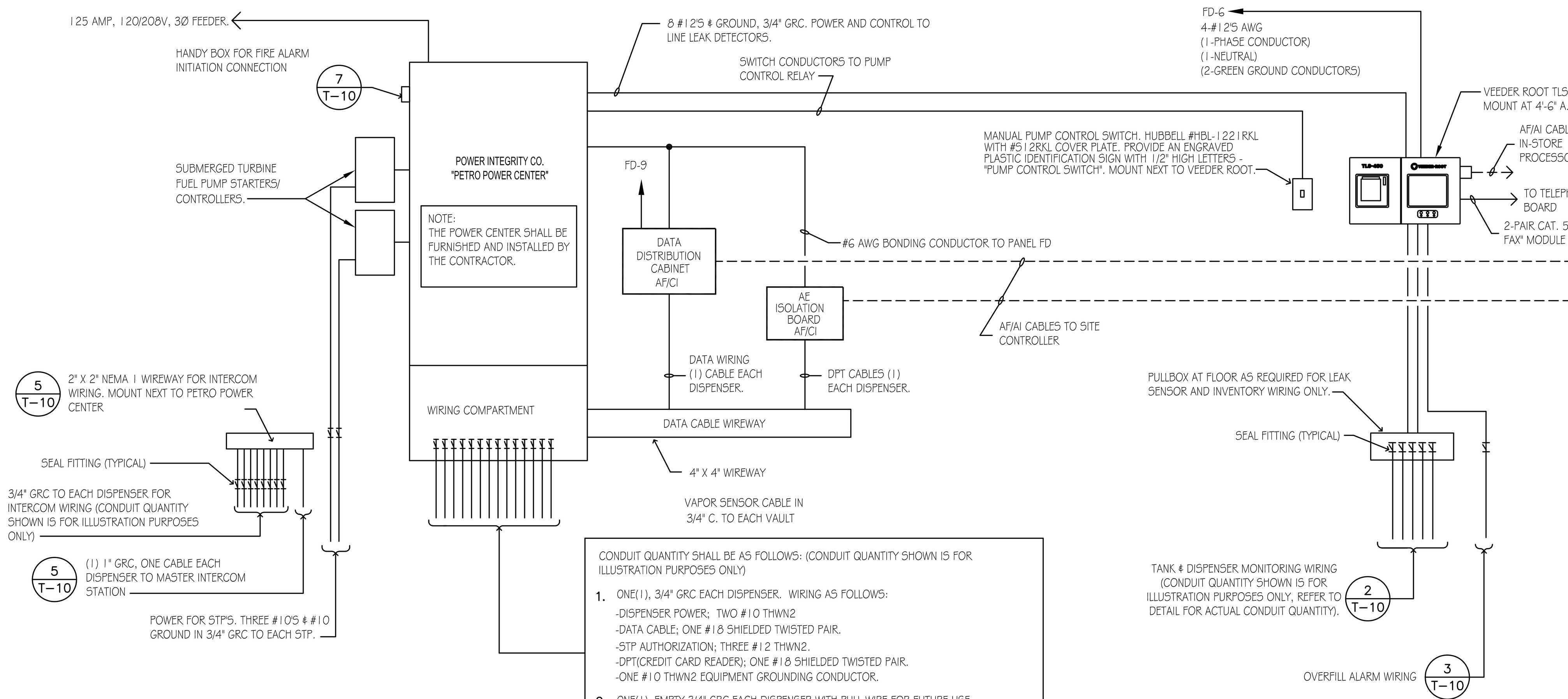

CONDUIT QUANTITY SHALL BE AS FOLLOWS: (CONDUIT QUANTITY SHOWN IS FOR ILLUSTRATION PURPOSES ONLY)

1. ONE(1), 3/4" GRC EACH DISPENSER. WIRING AS FOLLOWS:
   - -DISPENSER POWER; TWO #10 THWN2
   - -DATA CABLE; ONE #18 SHIELDED TWISTED PAIR.
   - -STP AUTHORIZATION; THREE #12 THWN2.
   - -DPT(CREDIT CARD READER); ONE #18 SHIELDED TWISTED PAIR.
   - -ONE #10 THWN2 EQUIPMENT GROUNDING CONDUCTOR.
2. ONE(1), EMPTY 3/4" GRC EACH DISPENSER WITH PULL WIRE FOR FUTURE USE.
3. ONE(1), 3/4" GRC TO OVERFILL ALARM AND ACKNOWLEDGE SWITCH. REF:3/FE100

NOTES

1. EXPOSED CONDUIT CONTAINING INTRINSICALLY SAFE WIRING SHALL BE IDENTIFIED AT INTERVALS OF 25 FEET OR LESS ACCORDING TO N.E.C. SECTION 504-80b.
2. AF/AI DENOTES AAFES FURNISHED/AAFES INSTALLED, AF/CI DENOTES AAFES FURNISHED CONTRACTOR INSTALLED.
3. SEE SITE PLAN FOR LOCATIONS OF STP'S AND DISPENSERS
4. VERIFY ALL CONNECTIONS AT THE VEEDER-ROOT, "PETRO POWER CENTER" AND THE DISPENSERS WITH THE MANUFACTURER'S WIRING DIAGRAMS.
5. SEE SITE PLAN FOR LOCATIONS OF STP'S AND DISPENSERS

CONDUIT NOTE

UNDERGROUND CONDUIT SERVING THE FUEL SYSTEM MAY BE SCHEDULE 40 PVC EXCEPT AS FOLLOWS:

GALVANIZED RIGID CONDUIT (GRC) SHALL BE USED FOR THE LAST 2' OF THE UNDERGROUND RUN TO A DISPENSER OR STORAGE TANK SUMP.

GALVANIZED RIGID CONDUIT SHALL BE USED FOR THE TRANSITION BETWEEN UNDERGROUND AND ABOVE GRADE CONDUIT BY THE USE OF A GRC ELBOW.

1 (T-10) GASOLINE DISPENSING ELECTRICAL DIAGRAM
NOT TO SCALE

NOTE

LINE VOLTAGE WIRING, CLASS II WIRING AND INTRINSICALLY SAFE WIRING SHALL ENTER THE PROPER COMPARTMENT OF THE CONSOLE. THE DETAIL IS SCHEMATIC ONLY. ALL CONDUITS SHALL BE GALV. RIGID.

LEGEND

- DS = DISPENSER SUMP SENSOR
- TS = TANK SUMP SENSOR
- INV = INVENTORY PROBE
- LLD = LINE LEAK DETECTOR
- IS = TANK INTERSTITIAL SENSOR
- A = "BELDEN" NO. 88760 JACKETED CABLE
- J = NEMA 4X JUNCTION BOX

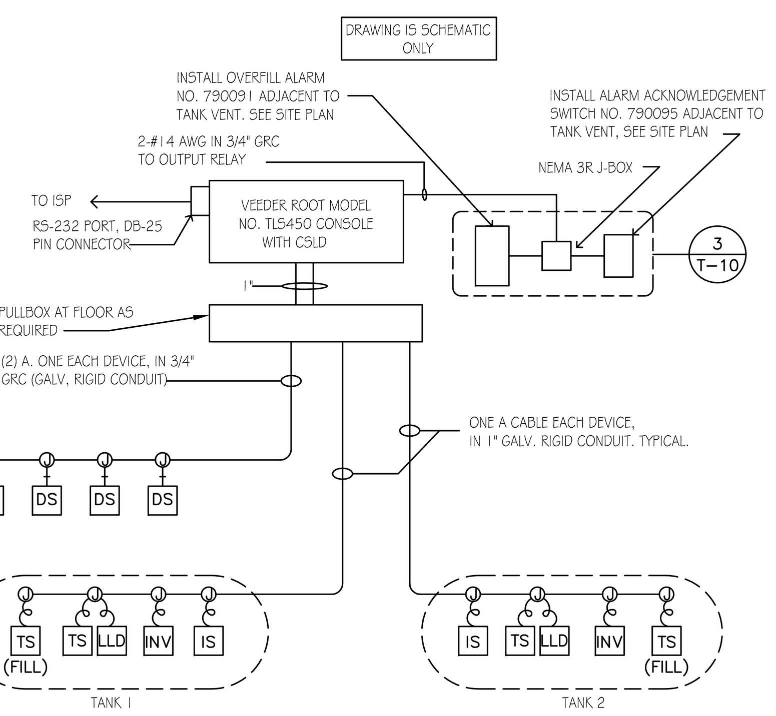

2 (T-10) VEEDER ROOT UST MONITORING/ INVENTORY/LINK DETECTION SYSTEM
NOT TO SCALE

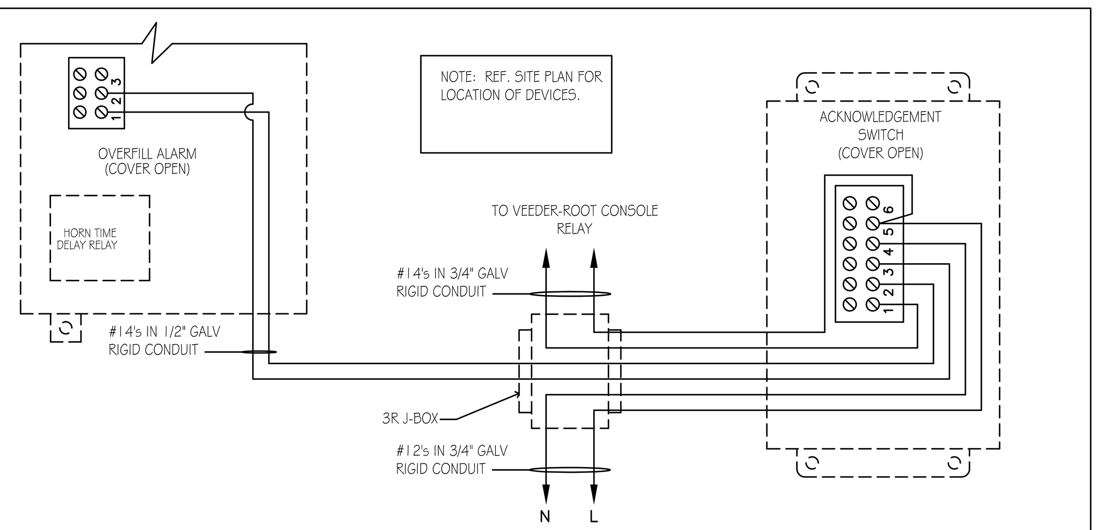

3 (T-10) OVERFILL ALARM WIRING
NOT TO SCALE

PUMP REMOTE CONTROL

THE POWER CENTER SHALL BE EQUIPPED WITH A PUMP RELAY THAT ALLOWS REMOTE MANUAL CONTROL OF ALL PUMPS. THE REMOTE CONTROL DEVICE SHALL BE A SINGLE-POLE SWITCH. SEE 1/FE100.

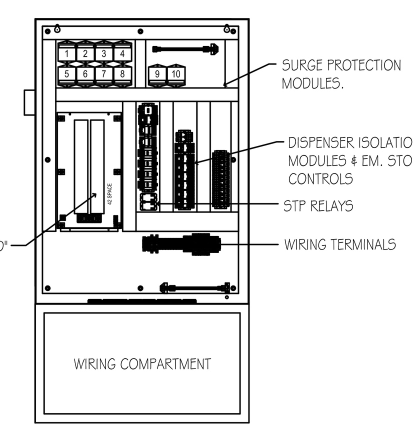

POWER INTEGRITY SYSTEM INFORMATION

MODEL:	PDS-CH-AAFES6D2-PRC
DESCRIPTION:	CUSTOM 6 DISPENSER, 2 PRODUCT PUMP POWER DISTRIBUTION CENTER
CONSISTS OF:	-(1) PPC-CH-AAFES6D2-PRC -SURGE SUPPRESSOR MODULES FOR EACH DISPENSER AND EACH ELECTRONIC CIRCUIT. -PUMP REMOTE CONTROL RELAY
SYSTEM MFR.	POWER INTEGRITY CORPORATION

SYSTEM ACCESSORIES SHOWN (ORDER SEPARATE)

EMERGENCY STOP/RESET STATION (1) MODEL: IA-ESOR

EMERGENCY STOP STATION W/COVER, OUTDOOR RATED (AS REQ.) MODEL: IA-ESOC

NOTES

1. THE POWER INTEGRITY "PETRO POWER CENTER" CONTAINS PANEL "FD" AND THE ASSOCIATED CIRCUIT BREAKERS, THE STP RELAYS, COMPONENTS REQUIRED FOR THE EMERGENCY STOP SYSTEM, RELAYS REQUIRED FOR THE FIRE ALARM INTERFACE, DISPENSER ISOLATION MODULES AND SURGE SUPPRESSION MODULES. ALL DEVICES ARE FACTORY WIRED TO A TERMINAL FOR CONNECTION BY THE CONTRACTOR. THE CONTRACTOR SHALL TERMINATE CONDUCTORS PER THE MFR. WIRING DIAGRAM(S). THE POWER CENTER SHALL BE PROVIDED BY THE CONTRACTOR.

4 (T-10) POWER CENTER LAYOUT
NOT TO SCALE

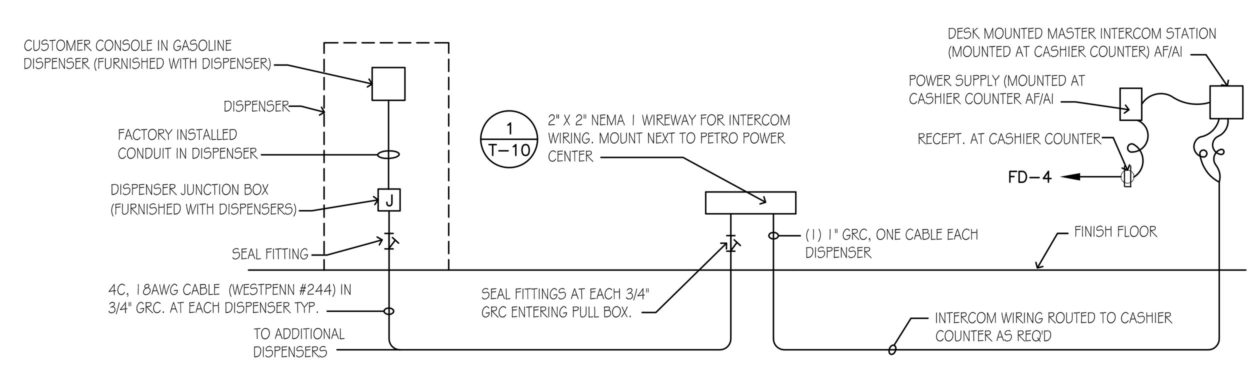

5 (T-10) INTERCOM RISER WIRING
NOT TO SCALE

NOTE

FIELD VERIFY CONNECTIONS OF EMERGENCY PUSH BUTTONS AND FIRE ALARM WIRING WITH VENDORS' SHOP DRAWINGS.

EMERGENCY SHUTDOWN OPERATION

ACTIVATION OF ANY EMERGENCY STOP BUTTON SHALL DE-ENERGIZE EACH TURBINE PUMP, EACH DISPENSER, INTERCOM POWER AND SHALL INITIATE A FIRE ALARM. INITIATION OF A FIRE ALARM SHALL DE-ENERGIZE THE PUMPS, DISPENSERS AND THE INTERCOM POWER.

LEGEND

ESB1 ESB2 ESB3	EMERGENCY STOP BUTTON, RED MUSH- ROOM OPERATOR, NEMA 12 ENCLOSURE. LOCATE ESB1 AT CASHIER, ESB2 & ESB3 AT SIDES OF BUILDING. SEE SITE PLAN

FIRE ALARM PANEL INTERFACE

FIRE ALARM WIRING TO BUILDING FIRE ALARM CONTROL PANEL. NORMALLY CLOSED DRY CONTACT RATED A MINIMUM OF 2 AMPS, 120VAC.

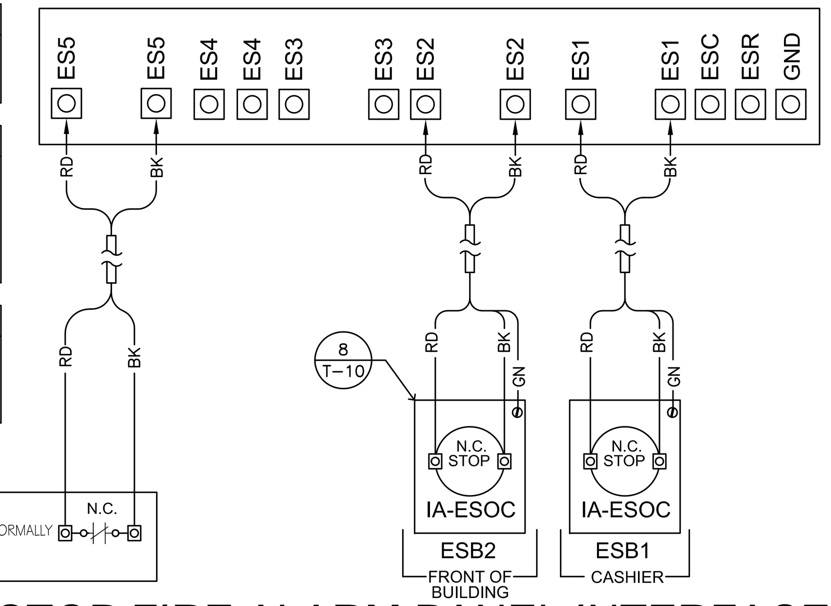

6 (T-10) EMERGENCY STOP FIRE ALARM PANEL INTERFACE
NOT TO SCALE

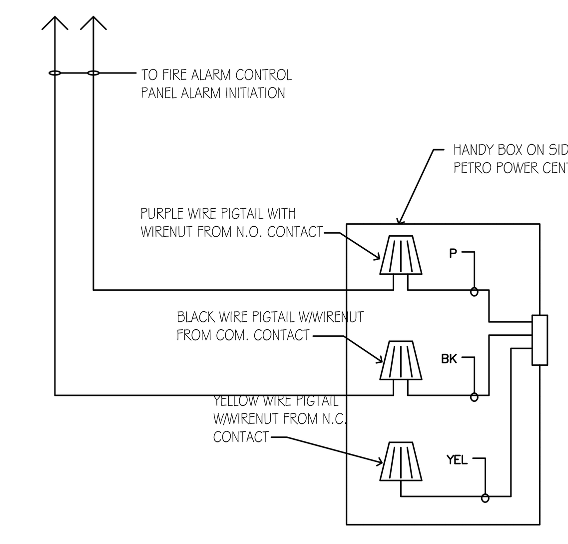

7 (T-10) EMERGENCY STOP FIRE ALARM PANEL INTERFACE
NOT TO SCALE

EMERGENCY INSTRUCTIONS

IN CASE OF FIRE OR SPILL:

USE EMERGENCY STOP BUTTON

(THIS WILL NOTIFY THE LOCAL FIRE DEPARTMENT)

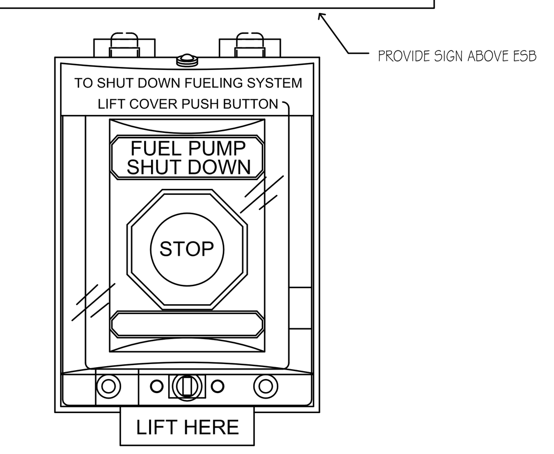

8 (T-10) EXTERIOR EMERGENCY STOP BUTTON
NOT TO SCALE

NOTE

WHERE CROSSING OTHER UTILITIES MAINTAIN 12" CLEARANCE

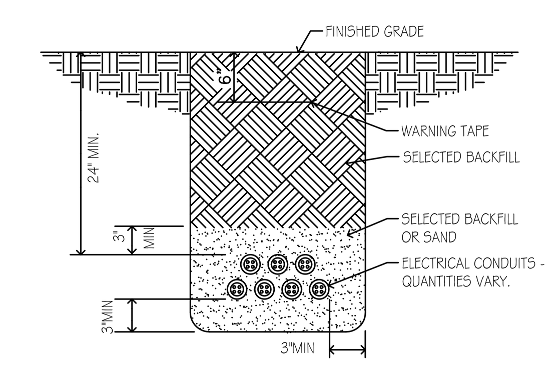

9 (T-10) UNDERGROUND ELECTRICAL CONDUITS
NOT TO SCALE

PANELBOARD SCHEDULE - PANELBOARD FD

225 AMP MAIN LUGS ONLY 120/208 VOLTS 3Ø PHASE

MFR. SQ.D BRANCH MOUNTING SPACE --

TYPE NQOD FLUSH ____ SURFACE X WIDTH 20"

PANEL IS INCLUDED IN PETRO POWER CENTER

CIRC. NO.	BKR. SIZE	WIRE SIZE	LOAD	REMARKS
1	*20A, 3P	#10	2HP	SUB. TURBINE PUMP
2	*20A, 3P	#10	2HP	SUB. TURBINE PUMP
3	*20A, 1P	#12	500VA	INTERCOM POWER
4	20A, 1P	#12	150VA	SITE CONTROLLER
5	20A, 1P	#12	240VA	VEEDER ROOT
6	20A, 1P	#12	250VA	CONTROL POWER
7	20A, 1P	#12	250VA	OVERFILL ALARM
8	20A, 1P	#12	500VA	DATA DIST. CABINET
9	20A, 1P	#12	100VA	V.V.M. CONTROLLER
10	*20A, 1P	#10	768VA	DISPENSER #1
11	*20A, 1P	#10	768VA	DISPENSER #2
12	*20A, 1P	#10	768VA	DISPENSER #3
13	*20A, 1P	#10	768VA	DISPENSER #4
14	*20A, 1P	#10	768VA	DISPENSER #5
15	*20A, 1P	#10	768VA	DISPENSER #6
16	–	–	–	–
17	–	–	–	–
18	–	–	–	–
19	–	–	–	–
20	–	–	–	–
21	–	–	–	–

PANEL FD ELECTRICAL NOTES

NOTES:

1. BREAKERS SUPPLYING THE DISPENSERS SHALL HAVE SWITCHED NEUTRALS.
2. BRANCH BREAKERS SUPPLYING THE DISPENSERS, VEEDER-ROOT, SITE CONTROLLER AND THE DATA DISTRIBUTION BOX SHALL BE ON THE SAME PHASE.
3. CIRCUIT NUMBERS ARE FOR REFERENCE ONLY AND ARE NOT INTENDED TO DESIGNATE SPACE LOCATION IN PANEL.
4. * - INDICATES CIRCUIT CONTROLLED BY EMERGENCY STOP
5. ALL ELECTRICAL EQUIPMENT, WIRING, DEVICES AND ETC, INCLUDING THE PETRO POWER CENTER, SHALL BE PROVIDED BY THE CONTRACTOR.

NOTES:

1. EXISTING VEEDER-ROOT UNIT SHALL BE REUSED.
2. THREE (3) EXISTING FUEL DISPENSERS CURRENTLY ON SITE SHALL BE REUSED. AAFES WILL PROVIDE THREE (3) ADDITIONAL FUEL DISPENSERS.

AAFES

Real Estate Directorate

AAFES (RE-C) P.O.BOX 660320 DALLAS, TX 75266-0320

KEY PLAN:

DATE	REVISION NO. & DESCRIPTION	BY
01/18/12		

JSA CONSULTING ENGINEERS

Johnson, Spellman & Associates, Inc.
6991 Peachtree Industrial Boulevard, Building 700,
Norcross, Georgia 30092
Phone (770) 447-4555 Fax (770)246-9042
visit us at www.jsace.com

© 2012 Johnson, Spellman & Associates, Inc.

PWBA PROJECT #290507

JAMES G. LUTHER LICENSE No 66118 STATE OF FLORIDA PROFESSIONAL ENGINEER

PARSONS WIBLE BRUMMAL ALKIRE / ARCHITECTS INC.
MONTGOMERY, ALABAMA

DESIGN BY: JGL

CHECKED BY: JGL

RECOMMENDED: DATE

APPROVED: DATE

ARMY & AIR FORCE EXCHANGE SERVICE
DEPARTMENTS OF THE ARMY & AIR FORCE

RE-C
REAL ESTATE DIRECTORATE

PROJECT:
TYNDALL AFB
CONSTRUCT SHOPPETTE/ FOOD/CLASS6/GAS

TYNDALL, AFB
FLORIDA

DRAWING TITLE:
PETROLEUM/ELECTRICAL SCHEMATICS

DATE: 18 JANUARY 2012

SCALE:

SHEET: T-10

DRAWING PROJECT NO. 0941-09-000003

GENERAL NOTES

1. CONTRACTOR SHALL FIELD VERIFY EXISTING CONDITIONS AND EXACT LOCATION OF ALL UTILITIES BEFORE DIGGING
2. SEE SPECIFICATIONS FOR GENERAL, PRODUCT, AND EXECUTION REQUIREMENTS
3. ACCESS SHALL BE PROVIDED TO SITE AND FACILITY AT ALL TIMES
4. CONTRACTOR SHALL CONDUCT OPERATIONS SO AS NOT TO CREATE NUISANCE OR HAZARD TO PUBLIC OR TRAFFIC
5. ADEQUATE DRAINAGE SHALL BE MAINTAINED AT ALL TIMES DURING CONSTRUCTION. DITCHES OR STRUCTURES DISTURBED DURING CONSTRUCTION SHALL BE RESTORED TO ORIGINAL CONDITION. ALL STORM WATER POLLUTION PREVENTION MEASURES SHALL BE IN COMPLIANCE WITH NATIONAL POLLUTANT DISCHARGE ELIMINATION SYSTEM REQUIREMENTS
6. CONTRACTOR SHALL PROVIDE AND INSTALL TRAFFIC CONTROL DEVICES IN ACCORDANCE WITH PART VI OF THE "MANUAL ON UNIFORM TRAFFIC CONTROL DEVICES" DURING CONSTRUCTION. CONTRACTOR SHALL INSURE ALL TRAFFIC CONTROL DEVICES ARE MAINTAINED IN CLEAN AND FUNCTIONAL CONDITION
7. RESTORE ANY GRASSED AND LANDSCAPE AREAS DAMAGED DURING CONSTRICTION TO ORIGINAL GRADE AND CONDITION. DISTURBED AREAS SHALL BE SEEDED, MULCHED AND FERTILIZED
8. RESTORE ANY ROADWAYS, PAVED SURFACES AND ACCESS ROUTES DAMAGED DURING CONSTRICTION TO ORIGINAL CONDITION
9. ALL PRODUCTS REGARDING THE PETROLEUM SYSTEM SHALL BE NEW UNLESS OTHERWISE NOTED

FUEL SYSTEM NOTES

1. EXISTING UNDERGROUND FUEL TANKS TO REMAIN. PROVIDE NEW PIPING SUMPS, PRODUCT PIPING, SECONDARY CONTAINMENT PIPING, FILL/SPILL BUCKETS, OVERFILL PREVENTION VALVE, TANK INTERSTITIAL RISER, VAPOR RECOVERY RISER AND ALL ASSOCIATED SURFACE MANHOLES. SEE SHEET T-5 FOR TANK DETAILS.
2. INSTALL NEW FUEL DISPENSER ASSEMBLIES, TYP. 3 (FURNISHED BY AAFES). RELOCATE EXISTING FUEL DISPENSER ASSEMBLIES (TYP. 3) FROM EXISTING FACILITY TO NEW FACILITY (SAME GEOGRAPHIC LOCATION). PROVIDE NEW STEEL ISLAND FORM (TYP. 6). SEE SHEET T-6.
3. PROVIDE NEW DISPENSER SUMP ASSEMBLIES.
4. PROVIDE NEW FUEL SYSTEM PIPING (FUEL SUPPLY) AND SECONDARY CONTAINMENT PIPING FROM FUEL TANKS TO DISPENSER ASSEMBLIES.
5. PROVIDE NEW DISPENSER GUARD ASSEMBLY (TYP. 12), SEE DETAIL SHEET T-6.
6. PROVIDE NEW 'EMERGENCY INSTRUCTIONS' WARNING SIGNS, SEE 'UNATTENDED FUELING NOTES' THIS SHEET.
7. INSTALL VEEDER-ROOT TLS 450 CONSOLE SALVAGED DURING DEMOLITION IN NEW BUILDING. CONSOLE MAY BE LOCATED DIFFERENTLY THAN SHOWN; COORDINATE WITH ARCHITECTURAL. SEE ELECTRICAL FOR POWER WIRING AND CONDUIT FROM DISTRIBUTION PANEL TO THE RELOCATED CONSOLE. PROVIDE CONDUIT AND WIRING FROM THE CONSOLE TO THE OVERFILL ALARM, AND TO THE PROBES AND SENSORS (POWER WIRING AND SENSOR WIRING SHALL NOT BE INSTALLED IN THE SAME CONDUIT).
8. PROVIDE NEW SURFACE MANHOLE OVER PIPING SUMPS. SEE SHEET T-5.
9. PROVIDE NEW OBSERVATION WELLS.

KEY NOTES

1. EXISTING 20,000 GALLON, DOUBLEWALLED FIBERGLASS UNDERGROUND FUEL STORAGE TANK (CONTAINS REGULAR UNLEADED FUEL), SEE FUEL SYSTEM NOTES REGARDING UPGRADE.
2. EXISTING 15,000 GALLON, DOUBLEWALLED FIBERGLASS UNDERGROUND FUEL STORAGE TANK (CONTAINS PREMIUM UNLEADED FUEL), SEE FUEL SYSTEM NOTES REGARDING UPGRADE.
3. NEW DISPENSER (TYP. 3), SEE FUEL SYSTEM NOTE 2.
4. RELOCATED DISPENSER (TYP. 3), SEE FUEL SYSTEM NOTE 2 .
5. NEW STEEL ISLAND FORM (TYP. 6), SEE FUEL SYSTEM NOTE 2.
6. NEW 2" FIBERGLASS FUEL PIPING IN 3" FIBERGLASS SECONDARY CONTAINMENT TO DISPENSERS, SEE FUEL SYSTEM NOTE 3.
7. NEW PUMP/PIPING SUMPS AND SURFACE MANHOLES. SEE FUEL SYSTEM NOTE 1 AND 8.
8. NEW TANK VENTS AND EXISTING (RELOCATED) OVERFILL ALARM.
9. FUEL FILLING STATION CANOPY SUPPORT COLUMN (TYP. 12), SEE ARCHITECTURAL DRAWINGS.
10. FUEL FILLING STATION CANOPY OVERHEAD, SEE ARCHITECTURAL DRAWINGS.
11. CONCRETE PAVEMENT UNDER CANOPY, SEE ARCHITECTURAL DRAWINGS.
12. EXPANSION JOINT, SEE ARCHITECTURAL DRAWINGS.
13. NEW DISPENSER GUARD ASSEMBLY (TYP. 12), SEE FUEL SYSTEM NOTE 5.
14. CONCRETE ISLAND EXPANSION JOINT, SEE SHEET T-6.
15. NEW OBSERVATION WELL (TYP. 2).
16. NEW EMERGENCY STOP BUTTON AND SIGNAGE TYPICAL, EACH DISPENSER ISLAND, FRONT OF STORE, AND INTERIOR MAIN CASHIER STATION.
17. RELOCATED VEEDER-ROOT TLS 450 CONSOLE, SEE FUEL SYSTEM NOTE 7.

UNATTENDED FUELING NOTES:

OPERATING INSTRUCTIONS SHALL BE CONSPICUOUSLY POSTED IN THE DISPENSING AREA. THE INSTRUCTIONS SHALL INCLUDE LOCATION OF EMERGENCY CONTROLS AND THE REQUIREMENT THAT THE USER STAY OUTSIDE THE VEHICLE AND IN VIEW OF THE FUELING NOZZLE DURING DISPENSING.

WARNING SIGNS SPECIFIED "EMERGENCY INSTRUCTIONS" SHALL BE CONSPICUOUSLY POSTED IN THE DISPENSER AREA ADJACENT TO EMERGENCY STOP BUTTONS (TYP. 4). THE INSTRUCTIONS SHALL INCORPORATE THE FOLLOWING OR EQUIVALENT WORDING:

EMERGENCY INSTRUCTIONS
IN CASE OF FIRE OR SPILL:
(1) USE EMERGENCY STOP BUTTON.
(2) REPORT ACCIDENT BY CALLING 911.
(3) REPORT LOCATION 4310.

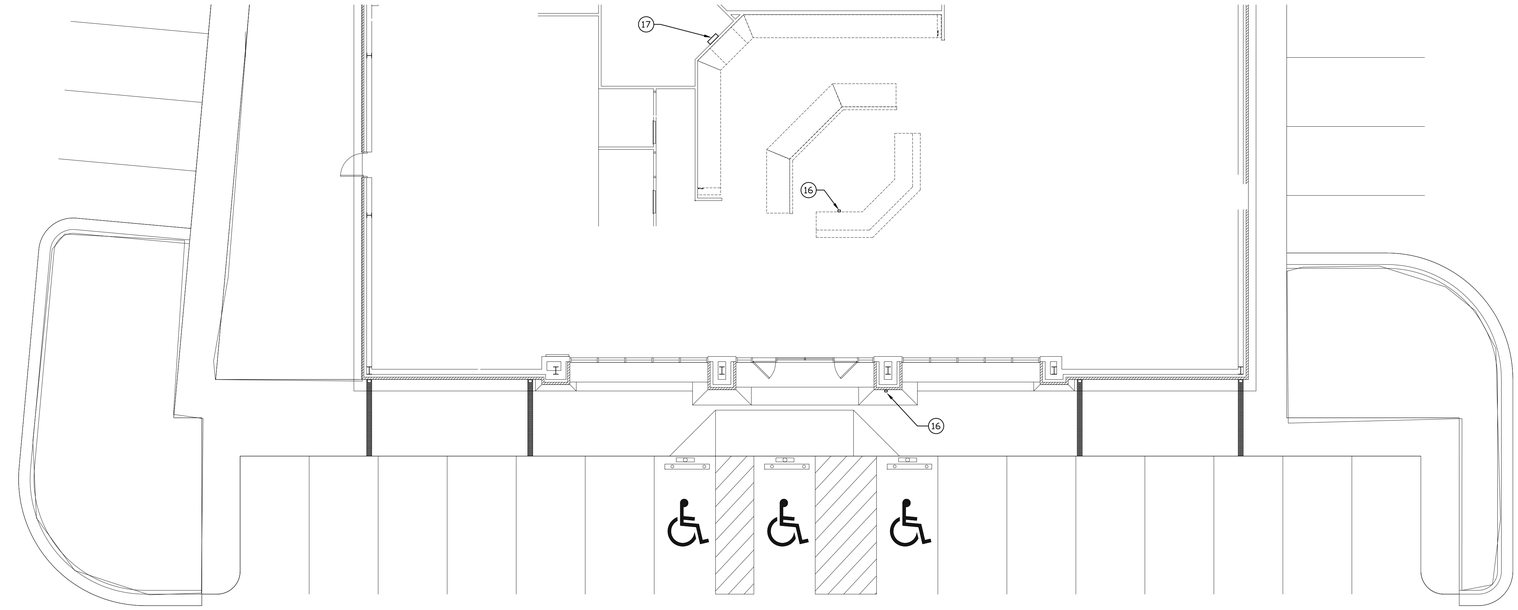

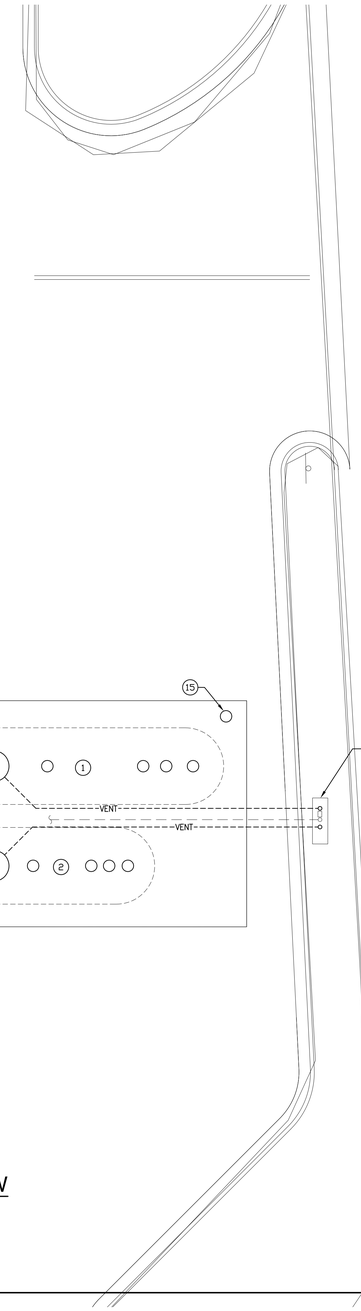

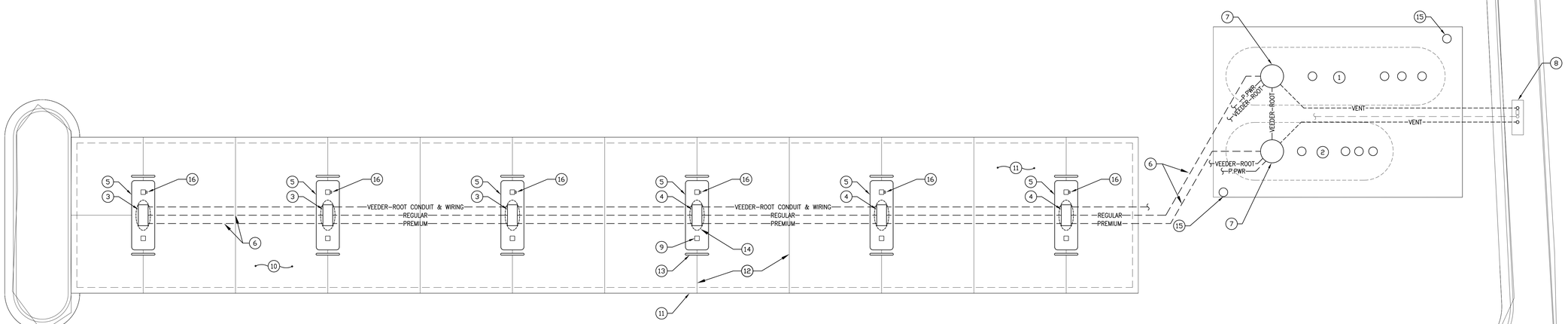

NEW WORK - UNDERGROUND TANKS, PIPING AND DISPENSER ISLANDS - PLAN VIEW
TYNDALL AIR FORCE BASE

TRUE NORTH
PLAN NORTH
SCALE: 1/8" = 1'-0"
0' 4' 8' 24'
2' 6' 16'

AAFES Real Estate Directorate
AAFES (RE-C) P.O.BOX 660320 DALLAS, TX 75266-0320

KEY PLAN:
AREA OF WORK

DATE	REVISION NO. & DESCRIPTION	BY
01/18/12		

CONSULTING ENGINEERS
Johnson, Spellman & Associates, Inc.
6991 Peachtree Industrial Boulevard, Building 700,
Norcross, Georgia 30092
Phone (770) 447-4555 Fax (770)246-9042
visit us at www.jsainc.com

© 2012 Johnson, Spellman & Associates, Inc.

PWBA PROJECT #290507

JAMES G. LUTHER LICENSE NO. 67344 STATE OF FLORIDA PROFESSIONAL ENGINEER

PARSONS WIBLE BRUMMAL ALKIRE / ARCHITECTS INC.
MONTGOMERY, ALABAMA

DESIGN BY: JGL
CHECKED BY: JGL
RECOMMENDED: DATE
APPROVED: DATE

ARMY & AIR FORCE EXCHANGE SERVICE
DEPARTMENTS OF THE ARMY & AIR FORCE

RE-C
REAL ESTATE DIRECTORATE

PROJECT:
TYNDALL AFB
CONSTRUCT SHOPPETTE/ FOOD/CLASS6/GAS

TYNDALL, AFB
FLORIDA

DRAWING TITLE:
FUEL STORAGE SYSTEM
NEW WORK -
PLAN VIEW

DATE:	SCALE:	SHEET:
18 JANUARY 2012	1/8" = 1'-0"	T-2
DRAWING PROJECT NO. 0941-09-000003		

FUEL SYSTEM NOTES

1. SEE SPECIFICATIONS FOR GENERAL PRODUCT AND EXECUTION REQUIREMENTS.
2. EXISTING 15,000 GALLON AND 20,000 GALLON UNDERGROUND STORAGE TANKS TO REMAIN.
3. EISTING UNDERGROUND FUEL TANKS TO REMAIN. PROVIDE NEW PIPING SUMPS, PRODUCT PIPING, SECONDARY CONTAINMENT PIPING, FILL/SPILL BUCKETS, OVERFILL PREVENTION VALVE, TANK INTERSTITIAL RISER, VAPOR RECOVERY RISER AND ALL ASSOCIATED SURFACE MANHOLES. SEE SHEET T-5 FOR TANK DETAILS.
4. THREE EXISTING DISPENSER ASSEMBLIES TO BE REUSED/RELOCATED.
5. PROVIDE THREE NEW DISPENSER ASSEMBLIES.

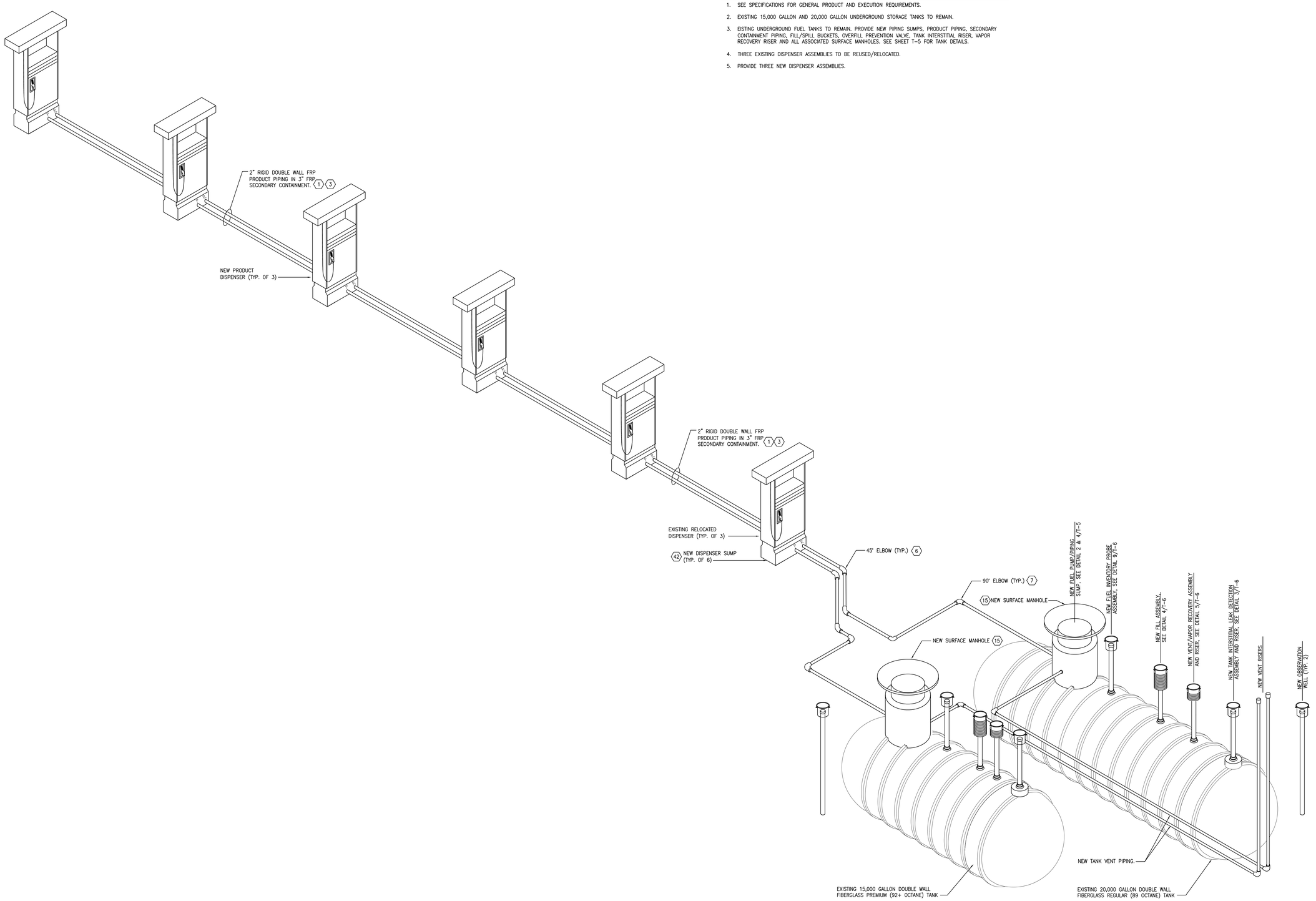

AAFES
Real Estate Directorate
AAFES (RE-C) P.O.BOX 660320 DALLAS, TX 75266-0320

KEY PLAN:

DATE	REVISION NO. & DESCRIPTION	BY
01/18/12		

CONSULTING ENGINEERS
Johnson, Spellman & Associates, Inc.
6991 Peachtree Industrial Boulevard, Building 700,
Norcross, Georgia 30092
Phone (770) 447-4555 Fax (770)246-9042
visit us at www.jsainc.com

© 2012 Johnson, Spellman & Associates, Inc.

PWBA PROJECT #290507

JAMES G. LUTHER LICENSE NO. 68377 STATE OF FLORIDA PROFESSIONAL ENGINEER

PARSONS WIBLE BRUMMAL ALKIRE / ARCHITECTS INC.
MONTGOMERY, ALABAMA

DESIGN BY: JGL
CHECKED BY: JGL

RECOMMENDED: DATE
APPROVED: DATE

ARMY & AIR FORCE EXCHANGE SERVICE
DEPARTMENTS OF THE ARMY & AIR FORCE

RE-C
REAL ESTATE DIRECTORATE

PROJECT:
TYNDALL AFB
CONSTRUCT SHOPPETTE/ FOOD/CLASS6/GAS

TYNDALL, AFB
FLORIDA

DRAWING TITLE:
PETROLEUM PIPING ISOMETRIC

DATE:	SCALE:	SHEET:
18 JANUARY 2012	NONE	T-3
DRAWING PROJECT NO. 0941-09-000003		

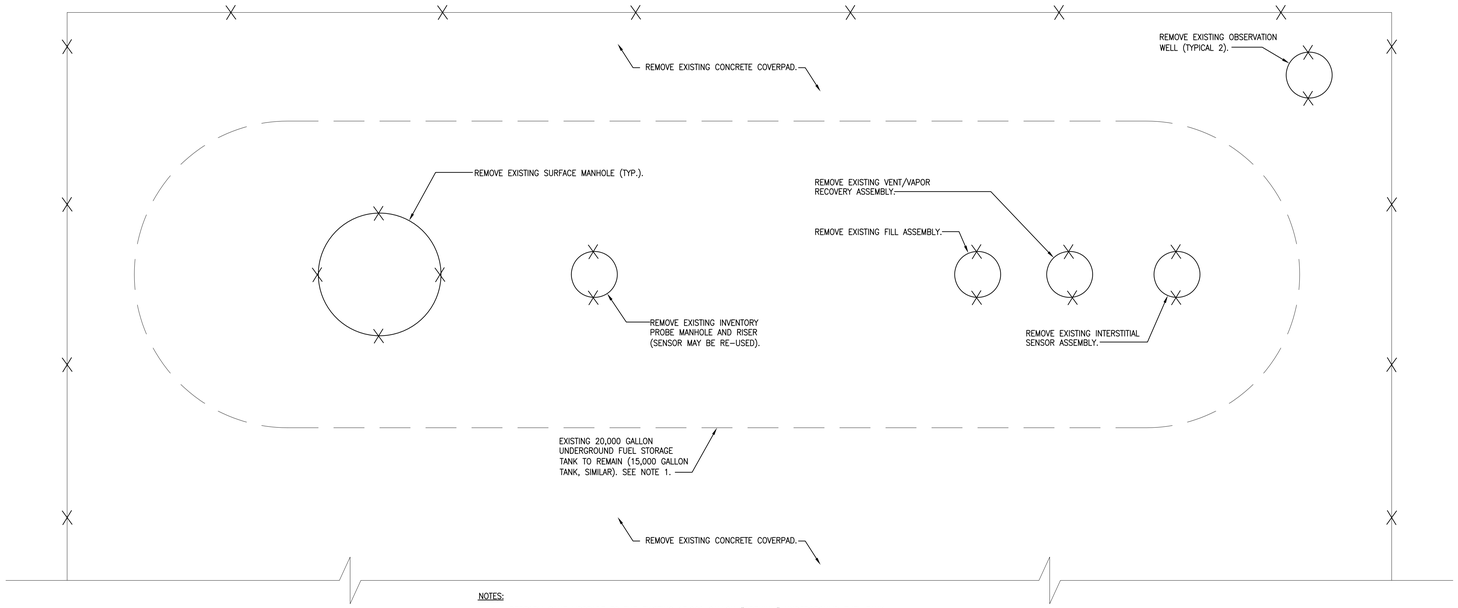

NOTES:

1. PERFORM SAME UPGRADE TO THE EXISTING 15,000 GALLON "PREMIUM" UNDERGROUND FUEL TANK.
2. EXERCISE EXTREME CAUTION DURING THE UPGRADE OF THE UNDERGROUND FUEL TANKS TO PREVENT UPLIFT/DISPLACEMENT OF THE TANKS DUE TO THE HIGH WATER TABLE. DO NOT ALLOW THE LIQUID LEVEL IN EITHER TANK TO DROP BELOW 75%.
3. EXERCISEEXTREME CAUTION DURING THE UPGRADE OF THE TANKS TO PREVENT THE INTRUSION OF GROUNDWATER OR RAINWATER INTO THE TANKS.

1 / T-4 UNDERGROUND FUEL TANK DEMOLITION – TOP VIEW
SCALE: 1/2" = 1'-0"

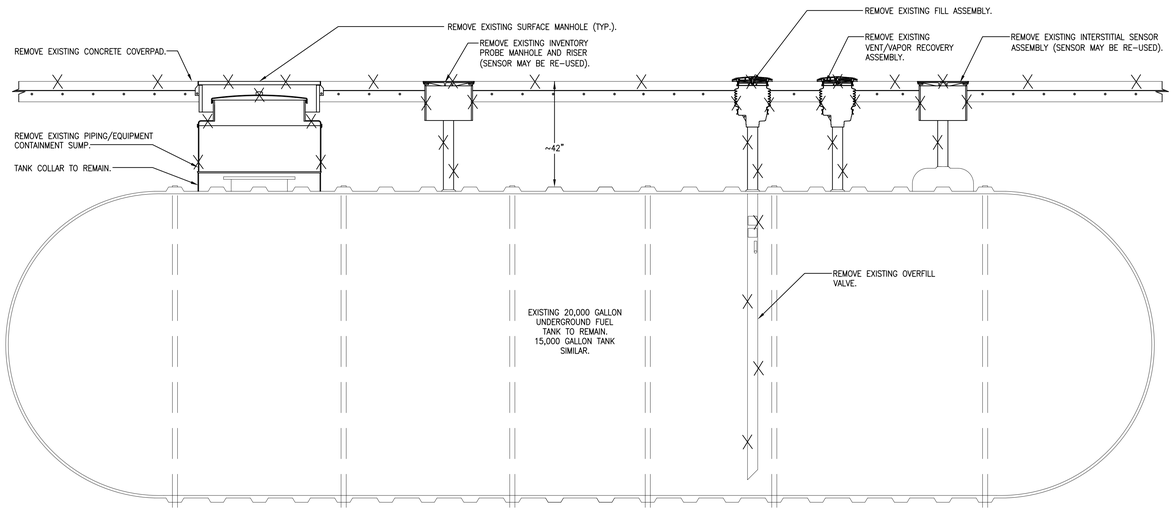

2 / T-4 UNDERGROUND FUEL TANK DEMOLITION – SIDE VIEW
SCALE: 1/2" = 1'-0"

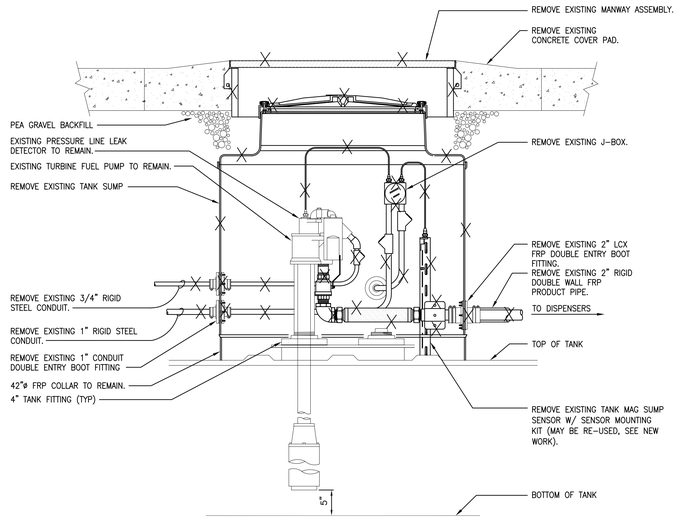

3 / T-4 PIPING CONTAINMENT SUMP DEMOLITION – SIDE VIEW
SCALE: 2" = 1'-0"

AAFES
Real Estate Directorate
AAFES (RE-C) P.O.BOX 660320 DALLAS, TX 75266-0320

KEY PLAN:

DATE	REVISION NO. & DESCRIPTION	BY
01/18/12		

CONSULTING ENGINEERS
Johnson, Spellman & Associates, Inc.
6991 Peachtree Industrial Boulevard, Building 700,
Norcross, Georgia 30092
Phone (770) 447-4555 Fax (770)246-9042
visit us at www.jsainc.com
© 2012 Johnson, Spellman & Associates, Inc.

PWBA PROJECT #290507

JAMES G. LUTHER LICENSE NO. 68197 STATE OF FLORIDA PROFESSIONAL ENGINEER

PARSONS WIBLE BRUMMAL ALKIRE / ARCHITECTS INC.
MONTGOMERY, ALABAMA

DESIGN BY: JGL
CHECKED BY: JGL
RECOMMENDED: DATE
APPROVED: DATE

ARMY & AIR FORCE EXCHANGE SERVICE
DEPARTMENTS OF THE ARMY & AIR FORCE

RE-C
REAL ESTATE DIRECTORATE

PROJECT:
TYNDALL AFB
CONSTRUCT SHOPPETTE/ FOOD/CLASS6/GAS

TYNDALL, AFB
FLORIDA

DRAWING TITLE:
FUEL STORAGE TANK DEMOLITION DETAILS

DATE: 18 JANUARY 2012
SCALE: AS NOTED
SHEET: T-4
DRAWING PROJECT NO. 0941-09-000003

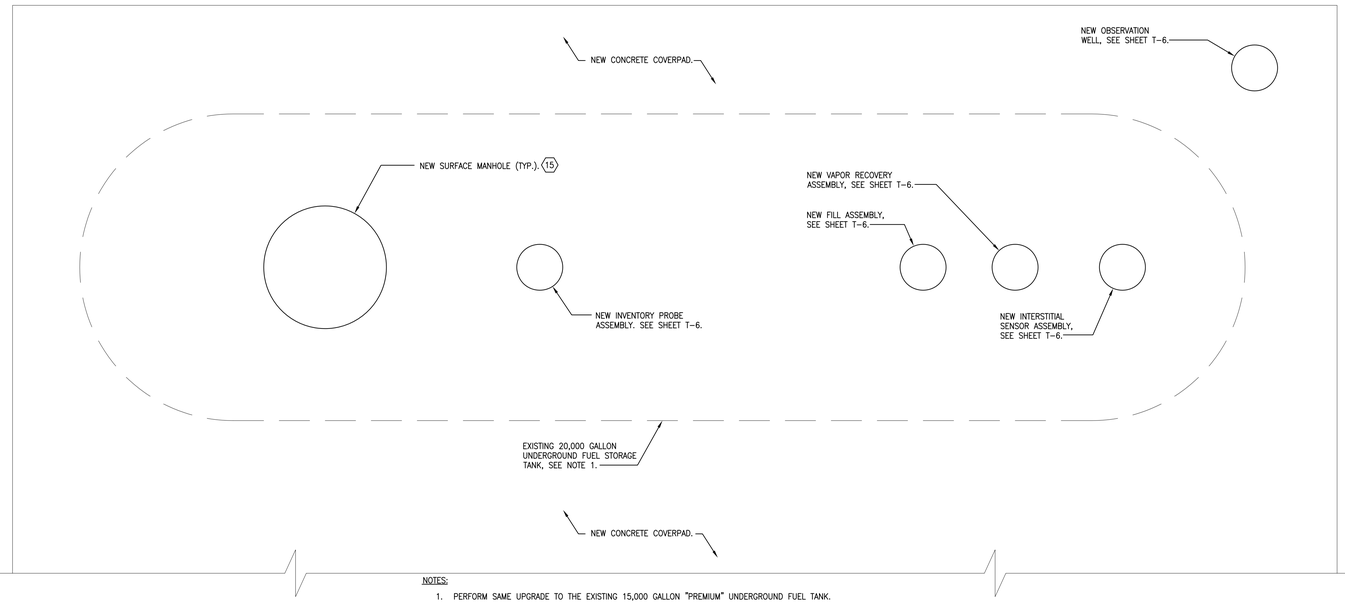

NOTES:

1. PERFORM SAME UPGRADE TO THE EXISTING 15,000 GALLON "PREMIUM" UNDERGROUND FUEL TANK.
2. EXERCISE EXTREME CAUTION DURING THE UPGRADE OF THE UNDERGROUND FUEL TANKS TO PREVENT UPLIFT/DISPLACEMENT OF THE TANKS DUE TO THE HIGH WATER TABLE. DO NOT ALLOW THE LIQUID LEVEL IN EITHER TANK TO DROP BELOW 75%.
3. EXERCISEEXTREME CAUTION DURING THE UPGRADE OF THE TANKS TO PREVENT THE INTRUSION OF GROUNDWATER OR RAINWATER INTO THE TANKS.

1 / T-5 UNDERGROUND FUEL TANK NEW WORK – TOP VIEW
SCALE: 1/2" = 1'-0"

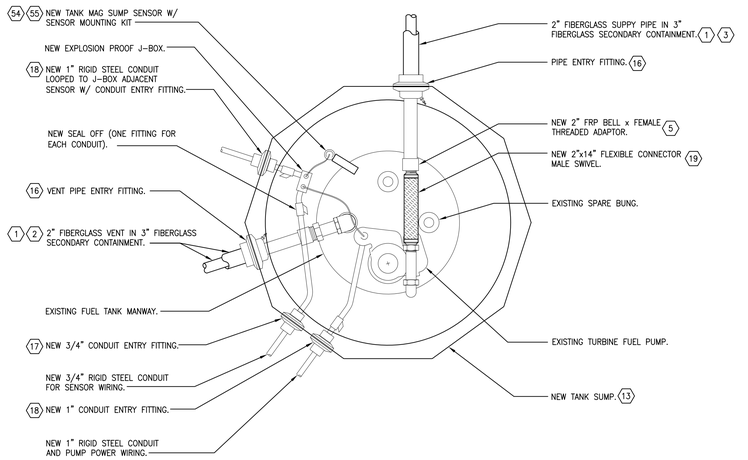

2 / T-5 PIPING CONTAINMENT SUMP NEW WORK – TOP VIEW
SCALE: 2" = 1'-0"

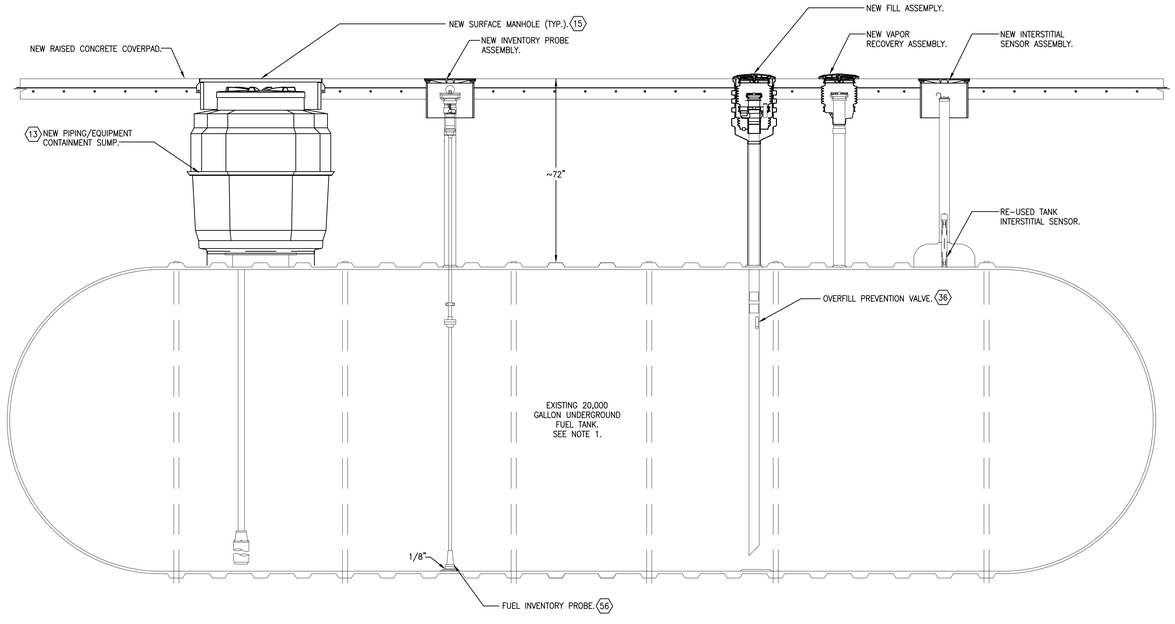

3 / T-5 UNDERGROUND FUEL TANK NEW WORK – SIDE VIEW
SCALE: 1/2" = 1'-0"

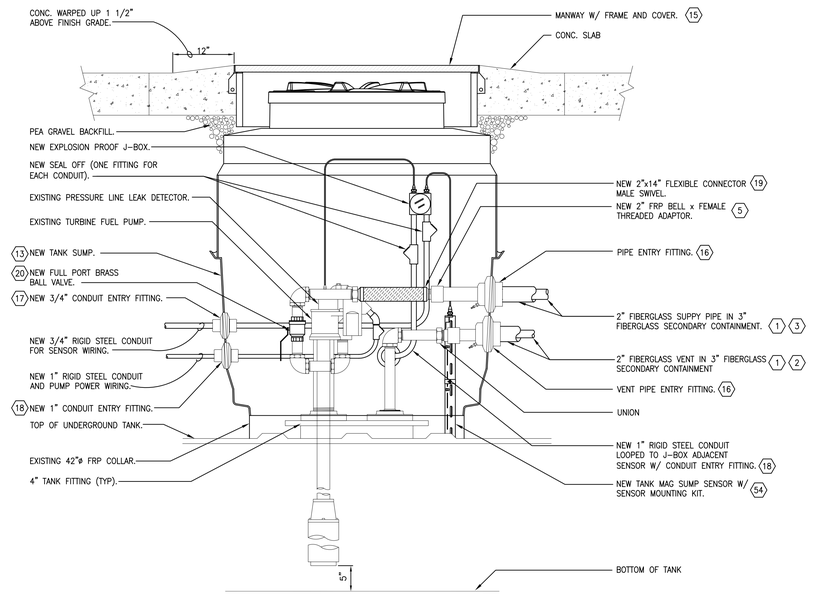

NOTES:

1. NEW PRODUCT PIPING AND ELECTRICAL CONDUIT SHALL ENTER SUMP NO MORE THAN 10" FROM PERPENDICULAR (90°) TO SUMP WALL.
2. REMOVE DIRT, DEBRIS AND LIQUID FROM PIPING SUMP PRIOR TO PROJECT COMPLETION.
3. BOND NEW TANK SUMP TO EXISTING COLLER. PREPARE MATING SURFACE CAREFULLY AND THROUGHLY, SEE SUMP AND TANK MANUFACTURER INSTRUCTIONS. JOINT MUST BE WATER TIGHT.

4 / T-5 PIPING CONTAINMENT SUMP NEW WORK – SIDE VIEW
SCALE: 2" = 1'-0"

AAFES
Real Estate Directorate
AAFES (RE-C) P.O.BOX 660320 DALLAS, TX 75266-0320

KEY PLAN:

DATE	REVISION NO. & DESCRIPTION	BY
01/18/12		

CONSULTING ENGINEERS
Johnson, Spellman & Associates, Inc.
6991 Peachtree Industrial Boulevard, Building 700,
Norcross, Georgia 30092
Phone (770) 447-4555 Fax (770)246-9042
visit us at www.jsainc.com
© 2012 Johnson, Spellman & Associates, Inc.

PWBA PROJECT #290507

JAMES G. LUTHER LICENSE No. 68378 STATE OF FLORIDA PROFESSIONAL ENGINEER

PARSONS WIBLE BRUMMAL ALKIRE / ARCHITECTS INC.
MONTGOMERY, ALABAMA

DESIGN BY: JGL
CHECKED BY: JGL

RECOMMENDED:	DATE
APPROVED:	DATE

ARMY & AIR FORCE EXCHANGE SERVICE
DEPARTMENTS OF THE ARMY & AIR FORCE

RE-C
REAL ESTATE DIRECTORATE

PROJECT:
TYNDALL AFB
CONSTRUCT SHOPPETTE/ FOOD/CLASS6/GAS

TYNDALL, AFB
FLORIDA

DRAWING TITLE:
FUEL STORAGE TANK NEW WORK DETAILS

DATE:	SCALE:	SHEET:
18 JANUARY 2012	AS NOTED	T-5

DRAWING PROJECT NO.
0941-09-000003

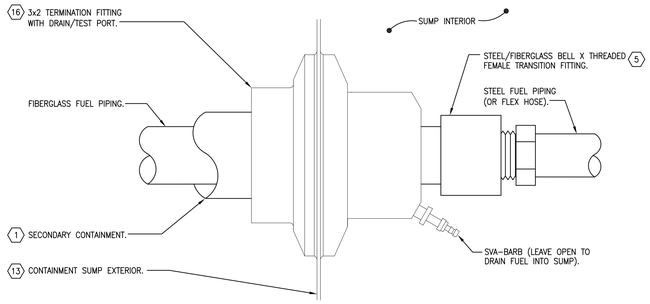

1 T-6 DETAIL – PIPE ENTRY INTO SUMP
SCALE: NOT TO SCALE

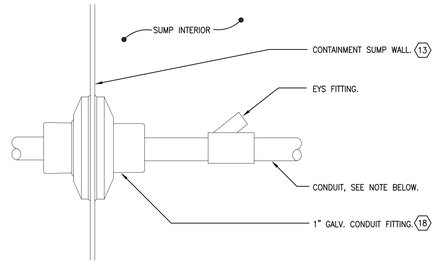

NOTE:
NEW CONDUIT AND WIRING ASSOCIATED WITH THE NEW MONITORING SYSTEM UNDER DIVISION 16 (ELECTRICAL) SCOPE OF WORK. MONITORING SYSTEM, SENSORS, PROBE, AND ACCESSORIES UNDER DIVISION 15 (MECHANICAL) SCOPE OF WORK. CONNECTION OF SENSORS, PROBE, ETC. ALSO UNDER DIVISION 15 SCOPE OF WORK.

2 T-6 DETAIL – CONDUIT ENTRY INTO SUMP
SCALE: NOT TO SCALE

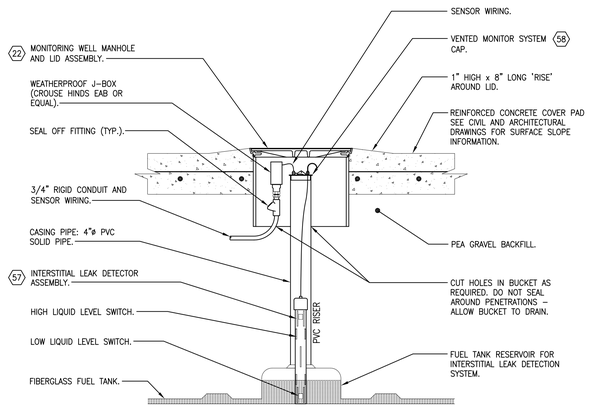

NOTE:
THE MONITORING LIQUID SHALL BE ANTI FREEZE SALT SOLUTION PROVIDED BY TANK MANUFACTURER.

3 T-6 DETAIL – INTERSTITIAL MONITOR
SCALE: NOT TO SCALE

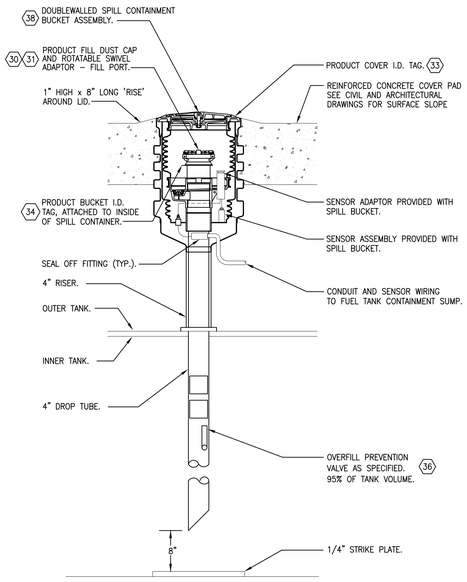

NOTE:
"SUPERBUCKET" SPILL CONTAINERS, MOUNTING RINGS, AND COVERS SOLD SEPARATELY. FOR EACH ASSEMBLY, THREE ITEMS SHOULD BE ORDERED.

4 T-6 DETAIL – DOUBLEWALLED FILL ASSEMBLY
SCALE: NOT TO SCALE

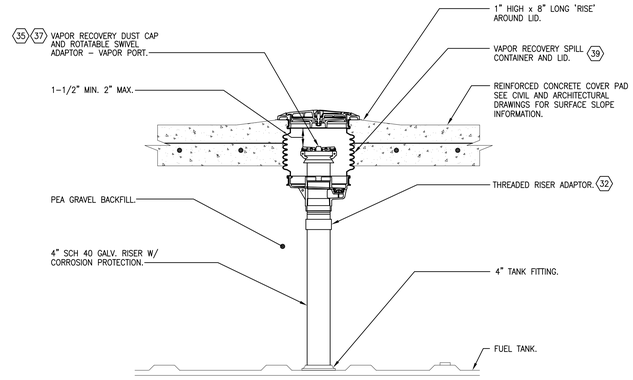

5 T-6 DETAIL – VAPOR RECOVERY
NOT TO SCALE

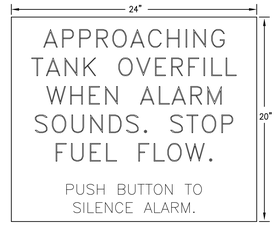

6 T-6 DETAIL – OVERFILL ALARM SIGN
NOT TO SCALE

NOTE: 1" & 1-3/4" TALL WHITE LETTERING ON RED BACKGROUND. SILKSCREENED ALUMINUM OR ENGRAVED PLASTIC.

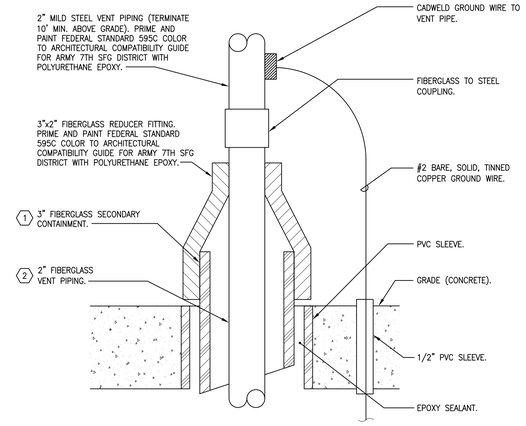

7 T-6 DETAIL – VENT PIPING SECONDARY CONTAINMENT REDUCER
SCALE: NOT TO SCALE

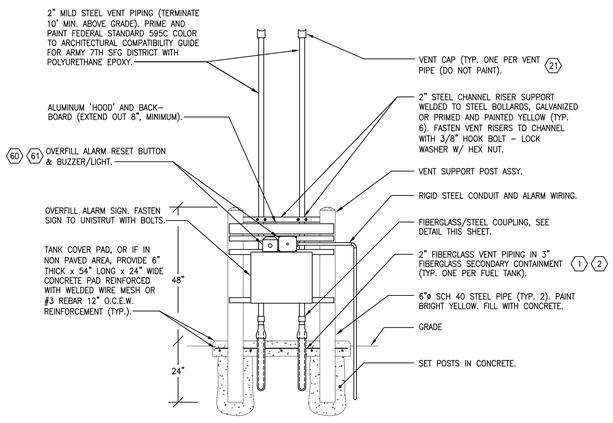

8 T-6 DETAIL – VENT PIPING/OVERFILL ALARM & SIGN SUPPORT ASSEMBLY
SCALE: NOT TO SCALE

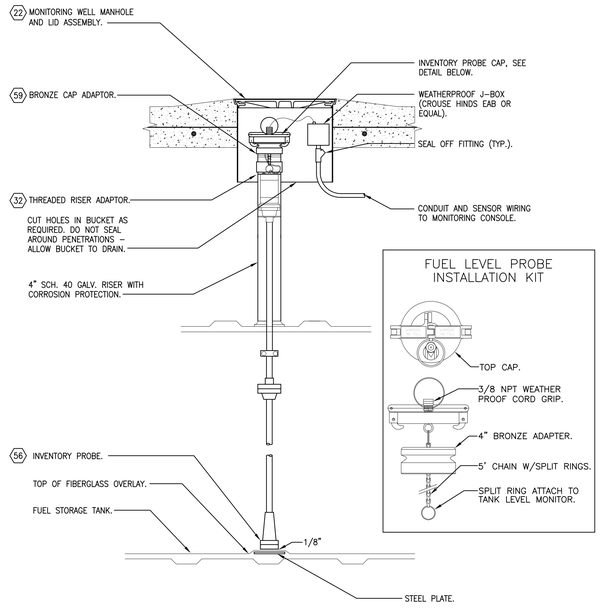

9 T-6 DETAIL – FUEL INVENTORY PROBE ASSEMBLY
NOT TO SCALE

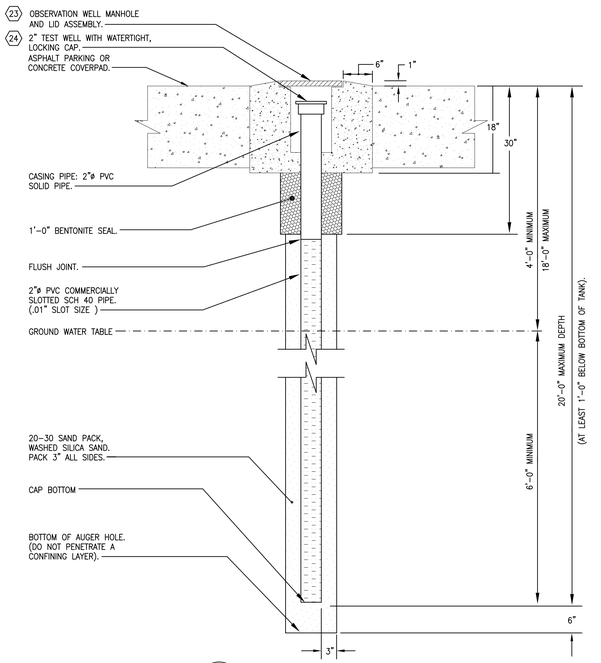

10 T-6 DETAIL – OBSERVATION WELL
SCALE: NOT TO SCALE

AAFES
Real Estate Directorate
AAFES (RE-C) P.O.BOX 660320 DALLAS, TX 75266-0320

KEY PLAN:

DATE	REVISION NO. & DESCRIPTION	BY
01/18/12		

CONSULTING ENGINEERS
Johnson, Spellman & Associates, Inc.
6991 Peachtree Industrial Boulevard, Building 700,
Norcross, Georgia 30092
Phone (770) 447-4555 Fax (770)246-9042
visit us at www.jsainc.com
© 2012 Johnson, Spellman & Associates, Inc.

PWBA PROJECT #290507

JAMES G. LUTHER LICENSE 57744 STATE OF FLORIDA PROFESSIONAL ENGINEER
No drawings will be released unless signed and sealed

PARSONS WIBLE BRUMMAL ALKIRE / ARCHITECTS INC.
MONTGOMERY, ALABAMA

DESIGN BY: JGL
CHECKED BY: JGL
RECOMMENDED: DATE
APPROVED: DATE

ARMY & AIR FORCE EXCHANGE SERVICE
DEPARTMENTS OF THE ARMY & AIR FORCE

RE-C
REAL ESTATE DIRECTORATE

PROJECT:
TYNDALL AFB
CONSTRUCT SHOPPETTE/ FOOD/CLASS6/GAS

TYNDALL, AFB
FLORIDA

DRAWING TITLE:
FUEL STORAGE SYSTEM MISCELLANEOUS DETAILS

DATE:	SCALE:	SHEET:
18 JANUARY 2012	NONE	T-6

DRAWING PROJECT NO.
0941-09-000003

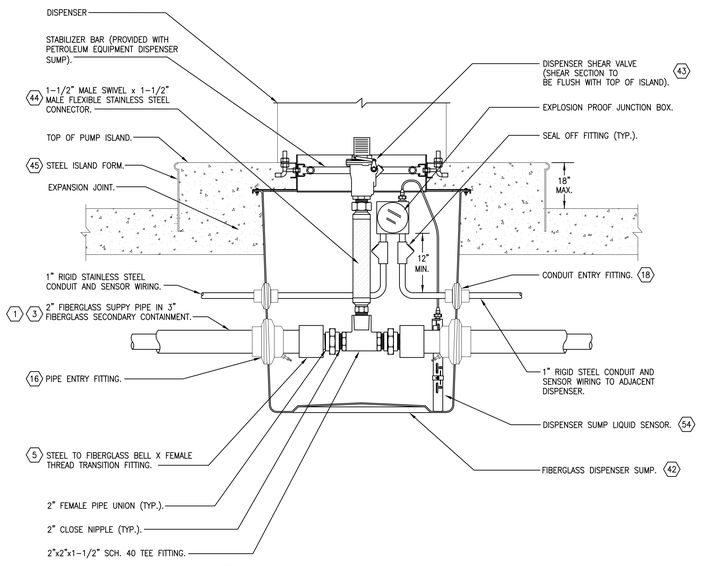

NOTE:
DISPENSER POWER AND CONTROL CONDUIT AND WIRING NOT SHOWN; SHOULD NOT PENETRATE DISPENSER SUMP. "PETROLEUM CONTAINMENT, INC – "CLE" SERIES CONDUITLESS ENTRY SUMP TYPE DISPENSER SUMP TO BE PROVIDED,.

1 T-7 DETAIL – DISPENSER SUMP PIPING LAYOUT – ELEVATION
NOT TO SCALE

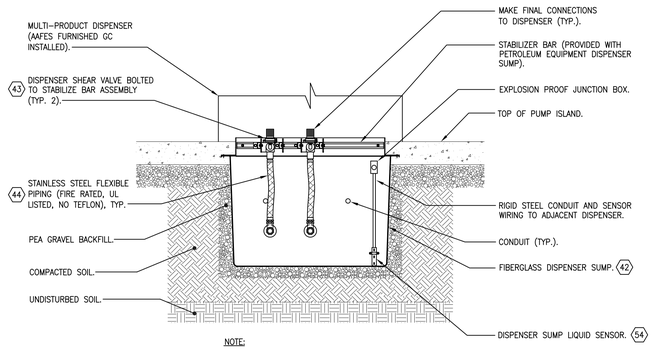

NOTE:
INSTALL PRODUCT PIPE BEFORE ELECTRICAL CONDUIT.

2 T-7 DETAIL – DISPENSER ISLAND
NOT TO SCALE

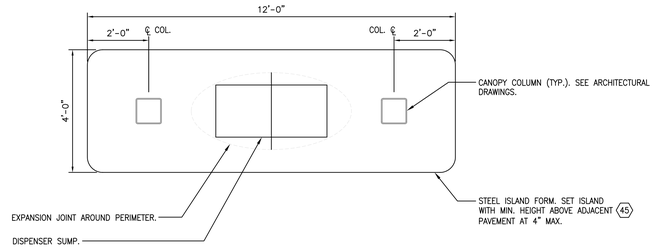

3 T-7 DETAIL – DISPENSER ISLAND
NOT TO SCALE

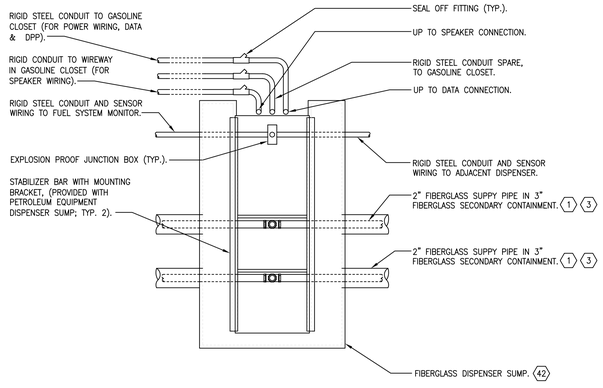

NOTE:
PROVIDE FLEXIBLE CONNECTORS AND SHEAR-VALVE ASSEMBLIES AT PRODUCT LINE CONNECTIONS TO GASOLINE DISPENSERS

4 T-7 DETAIL – DISPENSER ISLAND PIPING
NOT TO SCALE

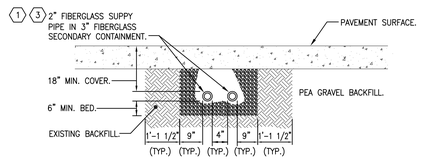

NOTE:
REFER TO SHEET T-2 FOR PIPING LAYOUT.

5 T-7 DETAIL – PIPING TRENCH UNDER PAVEMENT – ELEVATION
NOT TO SCALE

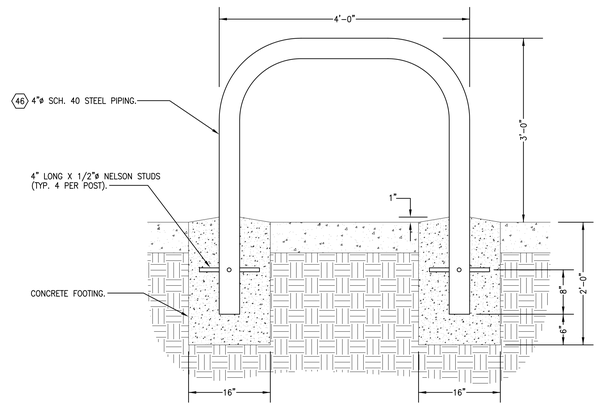

6 T-7 DETAIL – DISPENSER GUARD
NOT TO SCALE

DISPENSER SCHEDULE

TAG	TYPE	PRODUCT(S)	HOSE(S)	TANK PUMP	REMARKS
GASOLINE	REMOTE	GASOLINE	(2) 1"	P-1, P-2	(1)

1. TYPICAL OF (6) SIX.

AAFES
Real Estate Directorate
AAFES (RE-C) P.O.BOX 660320 DALLAS, TX 75266-0320

KEY PLAN:

DATE	REVISION NO. & DESCRIPTION	BY
01/18/12		

CONSULTING ENGINEERS
Johnson, Spellman & Associates, Inc.
6991 Peachtree Industrial Boulevard, Building 700,
Norcross, Georgia 30092
Phone (770) 447-4555 Fax (770)246-9042
visit us at www.jsainc.com

© 2012 Johnson, Spellman & Associates, Inc.

PWBA PROJECT #290507

JAMES G. LUTHER LICENSE No. 0057812 STATE OF FLORIDA PROFESSIONAL ENGINEER

PARSONS WIBLE BRUMMAL ALKIRE / ARCHITECTS INC.
MONTGOMERY, ALABAMA

DESIGN BY: JGL
CHECKED BY: JGL
RECOMMENDED: DATE
APPROVED: DATE

ARMY & AIR FORCE EXCHANGE SERVICE
DEPARTMENTS OF THE ARMY & AIR FORCE

RE-C
REAL ESTATE DIRECTORATE

PROJECT:
TYNDALL AFB
CONSTRUCT SHOPPETTE/ FOOD/CLASS6/GAS

TYNDALL, AFB
FLORIDA

DRAWING TITLE:
FUEL STORAGE SYSTEM MISCELLANEOUS DETAILS

DATE: 18 JANUARY 2012
SCALE: NONE
SHEET: T-7
DRAWING PROJECT NO. 0941-09-000003

BILL OF MATERIALS (DISPENSERS AND ISLANDS)

NO.	PART DESCRIPTION	STANDARD	FL EQ#
	PRODUCT PIPING		
1	3" RIGID FRP CONTAINMENT PIPE W/ CLAMSHELL FITTINGS	SMITH FIBERCAST: RED THREAD IIA	EQ-252
2	2" RIGID FRP VENT PIPE	SMITH FIBERCAST: RED THREAD IIA	EQ-252
3	2" RIGID FRP PRODUCT PIPE	SMITH FIBERCAST: RED THREAD IIA	EQ-252
4	2" RIGID FRP BELL x MALE THREADED ADAPTER	SMITH FIBERCAST: RED THREAD IIA	EQ-252
5	2" STEEL TO FIBERGLASS FITTING – BELL X FEMALE THREAD	SMITH FIBERCAST: 012020-194-4	EQ-252
6	3" FRP SECONDARY CONTAINMENT FITTING – 45°	SMITH FIBERCAST: 012030-310-3	EQ-252
7	3" FRP SECONDARY CONTAINMENT FITTING – 90°	SMITH FIBERCAST: 012030-360-3	EQ-252
8			
9			
10			
11			
12			
	MISCELLANEOUS PIPING AND FITTINGS		
13	PIPING SUMP	PETROLEUM CONTAINMENT, INC: PC48DBC	EQ-203
14	RIGID CONDUIT BOLTED FLANGE ENTRY FITTING	OPW: EBF-0751	EQ-285
15	SURFACE MANHOLE ASSEMBLY	OPW: CONQUISTADOR 39CD-PL10	EQ-285
16	3x2" TERMINATION FITTING W/ TEST PORT	BRAVO SYSTEMS: F-32-TS-T	EQ-615
17	3/4" CONDUIT ENTRY FITTING	BRAVO SYSTEMS: F-17-SS	EQ-615
18	1" CONDUIT ENTRY FITTING	BRAVO SYSTEMS: F-10-SS	EQ-615
19	2"M SWIVEL X 2"M STAINLESS STEEL FLEXIBLE CONNECTION, HOSE 14" LONG	OPW: FC20-SWM14	EQ-285
20	2" FULL PORT BALL VALVE	OPW: 21BV-0200	EQ-285
21	PRESSURE VACUUM VENT CAP	OPW: 623V-2203	
22	MONITORING WELL BUCKET AND LID ASSEMBLY (COMPOSITE WITH PLAIN LID)	EBW: 818-402-02	
23	MONITORING WELL BUCKET AND LID ASSEMBLY (COMPOSITE WITH TRIANGLE ON LID)	EBW: 818-402-01	
24	2" OBSERVATION WELL WITH WATERTIGHT, LOCKING CAP	FRANKLIN FUELING: 772-106-01	
25			
26			
27			
28			
29			
	FILL/VAPOR		
30	PRODUCT FILL DUST CAP	OPW: 634TT-7085-EVR	EQ-285
31	ROTATEABLE SWIVEL ADAPTOR – FILL PORT	OPW: 61SALP-1020-EVR	EQ-285
32	THREADED RISER ADAPTOR	OPW: FSA-400	EQ-285
33	PRODUCT COVER I. D. TAG	OPW: 1TAG-X000	EQ-285
34	PRODUCT BUCKET I. D. TAG	OPW: 1TAG-X010	EQ-285
35	ROTATEABLE SWIVEL ADAPTOR – VAPOR PORT	OPW: 61VSA-1020-EVR	EQ-285
36	OVERFILL PREVENTION VALVE ASSEMBLY	OPW: 61SO-4000	EQ-223
37	VAPOR RECOVERY DUST CAP	OPW: 1711T-7085-EVR	EQ-285
38	SECONDARY CONTAINED (DOUBLE WALLED) SPILL BUCKET WITH SENSOR	OPW: 1C-3132D	EQ-708
39	VAPOR RECOVERY SPILL CONTAINER WITH LID	OPW: 1C-2100-PEVR	EQ-285
40			
41			
	DISPENSER		
42	FIBERGLASS DISPENSER SUMP WITH STABILIZER BAR (SEE NOTE 1)	PETROLEUM CONTAINMENT, INC: "CLE" SERIES SUMP	EQ-203
43	SHEAR VALVE (SEE NOTE 2)	OPW: 10P-0152	EQ-203
44	1-1/2"M SWIVEL x 1-1/2"M STAINLESS STEEL FLEXIBLE CONNECTOR 14" LONG	OPW: FC15-MM14	EQ-285
45	STAINLESS STEEL DISPENSER ISLAND FORM	OPW: 6013SS-SFR6W4L12	
46	DISPENSER GUARD	OPW: 6PGR4-4972	EQ-285
47			
48			
49			
50			
51			
52			
53			
	MONITORING		
54	TANK AND DISPENSER SUMP LEAK SENSOR	VEEDER ROOT: 794380-323	EQ-724
55	UNIVERSAL SENSOR MOUNTING KIT	VEEDER ROOT: 330020-012	EQ-724
56	MAGNETOSTRICTIVE PROBE – 4" FLOATS	VEEDER ROOT: 847390-10X (COORDINATE TANK DIA.)	EQ-596
57	HYDROSTATIC RESERVOIR SENSOR – DUAL FLOAT	VEEDER ROOT: 794380-303	EQ-724
58	VENTED INTERSTITIAL MONITOR RISER CAP	INCON: TSP-KV4	EQ-757
59	MONITORING PROBE CAP W/BRONZE ADAPTOR KIT	OPW: 62MBB-0375	EQ-285
60	OVERFILL ALARM	VEEDER ROOT: 790091-001	EQ-724
61	OVERFILL ALARM ACKNOWLEDGEMENT SWITCH	VEEDER ROOT: 790095-001	EQ-724
62			
63			
64			
65			

BILL OF MATERIALS (DISPENSERS AND ISLANDS) NOTES

1. FIBERGLASS DISPENSER SUMP MAY BE OPW/FLEXWORKS OR PETROLEUM CONTAINMENT INC.
2. SHEAR VALVE MAY BE OPW/FLEXWORKS OR PETROLEUM CONTAINMENT INC.
3. EXISTING V-R CONSOLE, INVENTORY PROBES, LEAK SENSORS, AND OVERFILL ALARM MAY BE RE-USED IF IN GOOD CONDITION,

AAFES
Real Estate Directorate
AAFES (RE-C) P.O.BOX 660320 DALLAS, TX 75266-0320

KEY PLAN:

DATE	REVISION NO. & DESCRIPTION	BY
01/18/12		

CONSULTING ENGINEERS
Johnson, Spellman & Associates, Inc.
6991 Peachtree Industrial Boulevard, Building 700,
Norcross, Georgia 30092
Phone (770) 447-4555 Fax (770)246-9042
visit us at www.jsainc.com

© 2012 Johnson, Spellman & Associates, Inc.

PWBA PROJECT #290507

JAMES G. LUTHER LICENSE NO. 61814 STATE OF FLORIDA PROFESSIONAL ENGINEER

PARSONS WIBLE BRUMMAL ALKIRE / ARCHITECTS INC.
MONTGOMERY, ALABAMA

DESIGN BY: JGL
CHECKED BY: JGL

RECOMMENDED: DATE
APPROVED: DATE

ARMY & AIR FORCE EXCHANGE SERVICE
DEPARTMENTS OF THE ARMY & AIR FORCE

RE-C
REAL ESTATE DIRECTORATE

PROJECT:
TYNDALL AFB CONSTRUCT SHOPPETTE/ FOOD/CLASS6/GAS

TYNDALL, AFB FLORIDA

DRAWING TITLE:
BILL OF MATERIALS CHART

DATE:	SCALE:	SHEET:
18 JANUARY 2012	NONE	T-8
DRAWING PROJECT NO. 0941-09-000003		

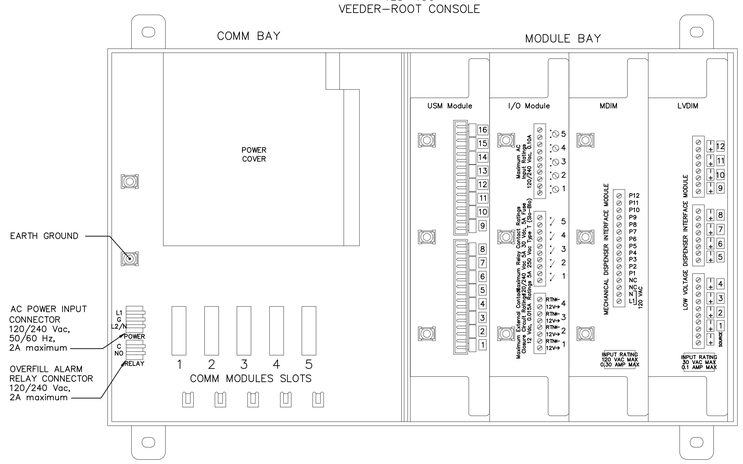

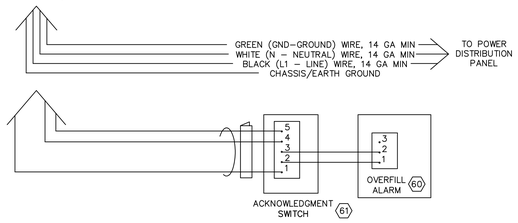

COMM MODULES	PERMISSIBLE SLOT(S)
MODEM MODULE	1, 2, OR 3
USB MODULE	5 ONLY
USB/ETHERNET MODULE	5 ONLY
ETHERNET MODULE	4 OR 5
SINGLE SERIAL PORT MODULE	1, 2, OR 3
DUAL SERIAL PORT MODULE	1, 2, OR 3
DIM MODULE	4 ONLY
NOTE: LIMITED SINGLE PORT CAPABILITY IN SLOT 3	

INSIDE THE MODULE AREA OF BOTH THE TLS-450 CONSOLE AND THE EXPANSION BOX, ANY
COMBINATION OF UP TO FOUR MODULES MAY BE INSTALLED. I/O MODULES PROVIDE WIRING TERMINALS FOR THE CONNECTION OF EQUIPMENT INSTALLED IN NON-HAZARDOUS LOCATIONS. THE USM (UNIVERSAL SENSOR MODULE) PROVIDES WIRING TERMINALS FOR THE CONNECTION OF INTRINSICALLY SAFE APPARATUS.

THE ELECTRONICS LOCATED IN THE BARRIER CIRCUIT OF THE USM MODULE FORMS AN INTRINSICALLY SAFE ENERGY LIMITED SYSTEM. PROBE AND SENSORS CONNECTED TO THE OUTPUT TERMINALS OF THE USM MODULE ARE CONSIDERED INTRINSICALLY SAFE APPARATUS AND ARE APPROVED FOR USE IN CLASS 1, GROUP D HAZARDOUS (CLASSIFIED) LOCATIONS.

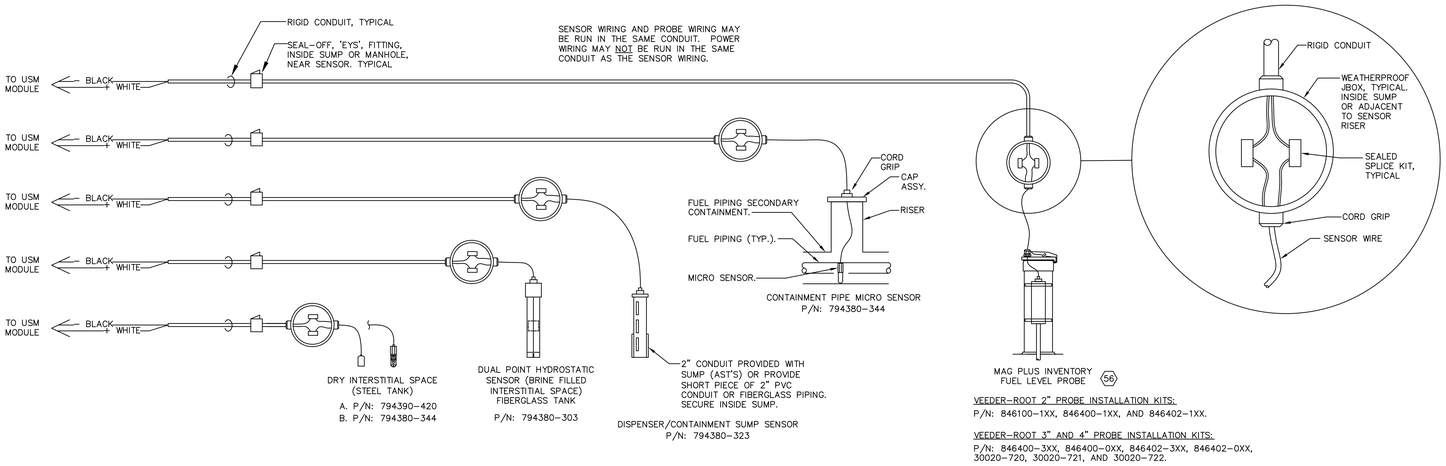

VEEDER-ROOT 2" PROBE INSTALLATION KITS:
P/N: 846100-1XX, 846400-1XX, AND 846402-1XX.

VEEDER-ROOT 3" AND 4" PROBE INSTALLATION KITS:
P/N: 846400-3XX, 846400-0XX, 846402-3XX, 846402-0XX, 30020-720, 30020-721, AND 30020-722.

NOTES:

1. THIS SCHEMATIC IS GENERIC. THE NUMBER AND TYPE OF SENSORS AND PROBES WILL BE DIFFERENT FOR EACH SPECIFIC INSTALLATION.
2. WIRING TO PROBE AND SENSORS MUST SHIELDED REGARDLESS OF CONDUIT MATERIAL OR APPLICATION. SHIELDED CABLE MUST BE RATED LESS THAN 100 PICOFARAD PER FOOT, AND BE MANUFACTURED WITH A MATERIAL SUITABLE FOR THE ENVIRONMENT (OIL & GAS RESISTANT); SEE VEEDER ROOT INSTALLATION INSTRUCTIONS.
3. LABEL OR COLOR CODE ALL FIELD WIRING TO ENSURE POLARITY.
4. LABEL ALL ALARM JUNCTION BOXES, MONITOR JUNCTION BOXES AND PANELS.
5. PROVIDE PLASTIC PROTECTIVE BUSHING AT ALL CONDUIT ENTRANCES TO PANELS, JUNCTION BOXES & WIRING.
6. PANEL POWER TO BE OBTAINED FROM A PROTECTED PANEL. PROVIDE NEW 20 AMP, 1-POLE BREAKER. TERMINATE CHASSIS AND BARRIER GROUND WIRE TO PANEL GROUND BUS. SEE ELECTRICAL DRAWING.
7. CONDUIT TO BE RIGID GALVANIZED.
8. MONITORING WIRES SHALL BE A SINGLE RUN OF WIRE WITH NO SPLICES.

SCHEMATIC FOR GENERAL INFORMATION. REFER TO VEEDER-ROOT LITERATURE/ GUIDES FOR INSTALLATION INFORMATION.

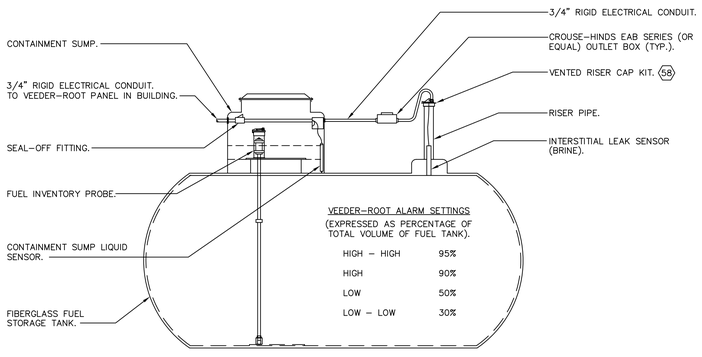

HAZARDOUS AREA
(CLASS 1, DIVISION 1, GROUP D)

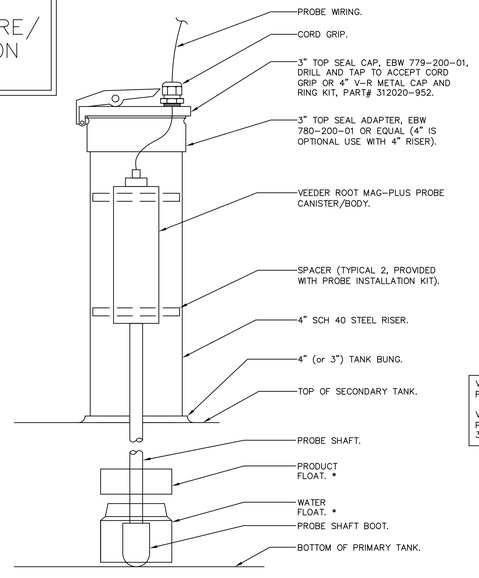

VEEDER-ROOT 2" PROBE INSTALLATION KITS:
P/N B46100-1XX, B46400-1XX, AND B46402-1XX

VEEDER-ROOT 3" AND 4" PROBE INSTALLATION KITS:
P/N B46400-3XX, -1XX, AND B46402-3XX, -0XX, 30020-720, -720, -721, -722

* 2" FLOAT KIT (OR 1" FLOAT KIT) REQUIRED WHEN TANK BUNG IS 2" DIAMETER.

DETAIL - FUEL INVENTORY PROBE
NOT TO SCALE

AAFES
Real Estate Directorate
AAFES (RE-C) P.O.BOX 660320 DALLAS, TX 75266-0320

KEY PLAN:

DATE	REVISION NO. & DESCRIPTION	BY
01/18/12		

JCA CONSULTING ENGINEERS
Johnson, Spellman & Associates, Inc.
6991 Peachtree Industrial Boulevard, Building 700,
Norcross, Georgia 30092
Phone (770) 447-4555 Fax (770)246-9042
visit us at www.jsainc.com

© 2012 Johnson, Spellman & Associates, Inc.

PWBA PROJECT #290507

JAMES G. LUTHER LICENSE No. 66187 STATE OF FLORIDA PROFESSIONAL ENGINEER

PARSONS WIBLE BRUMMAL ALKIRE / ARCHITECTS INC.
MONTGOMERY, ALABAMA

DESIGN BY: JGL
CHECKED BY: JGL
RECOMMENDED: DATE
APPROVED: DATE

ARMY & AIR FORCE EXCHANGE SERVICE
DEPARTMENTS OF THE ARMY & AIR FORCE

RE-C
REAL ESTATE DIRECTORATE

PROJECT:
TYNDALL AFB
CONSTRUCT SHOPPETTE/ FOOD/CLASS6/GAS
TYNDALL, AFB
FLORIDA

DRAWING TITLE:
VEEDER-ROOT TLS-450 SCHEMATIC

DATE:	SCALE:	SHEET:
18 JANUARY 2012		T-9
DRAWING PROJECT NO. 0941-09-000003		

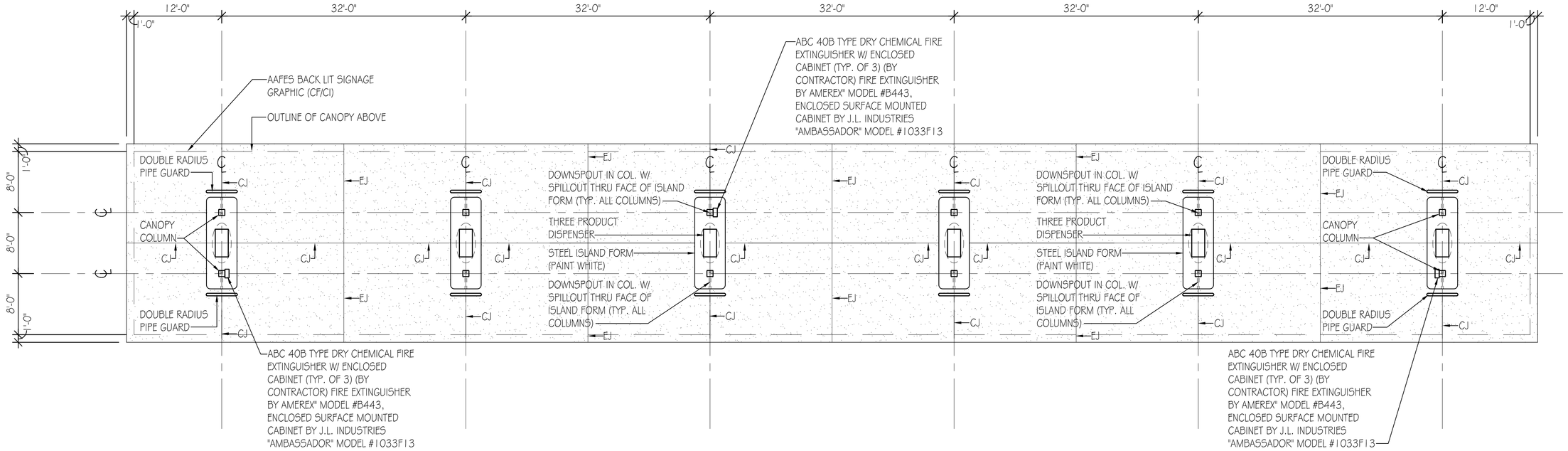

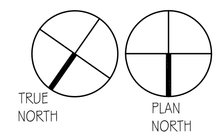

FUEL CANOPY - PLAN

SCALE: 1/8" = 1'-0"

0' 4' 8' 24'
2' 6' 16'

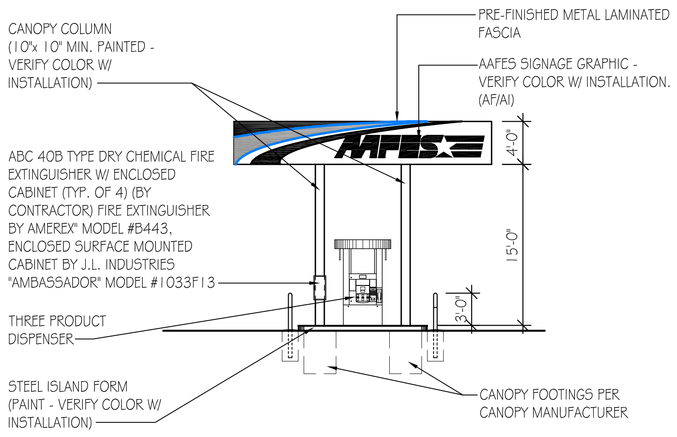

FUEL CANOPY - EAST ELEVATION

SCALE: 1/8" = 1'-0"

0' 4' 8' 24'
2' 6' 16'

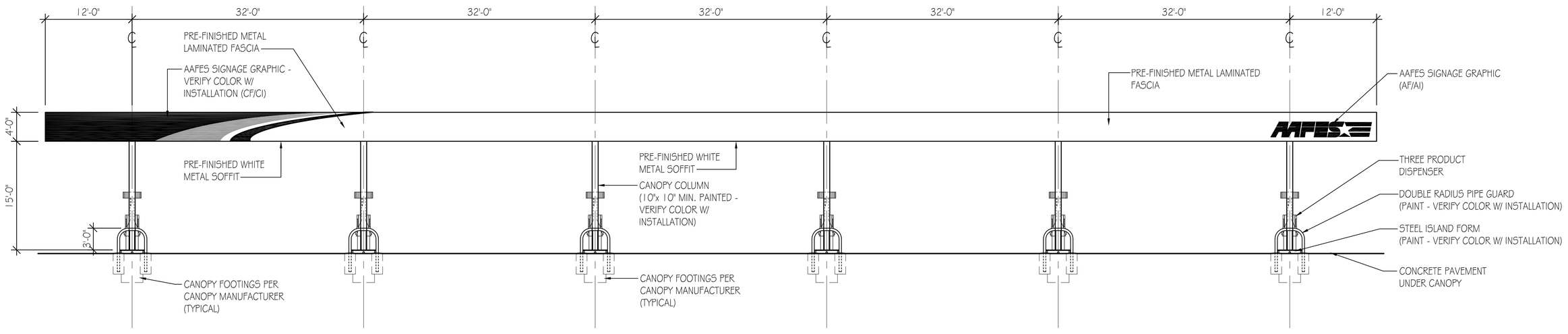

FUEL CANOPY - NORTH ELEVATION

SCALE: 1/8" = 1'-0"

0' 4' 8' 24'
2' 6' 16'

NOTE:
GENERAL CONTRACTOR SHALL OBTAIN WRITTEN APPROVAL FROM CONTRACTING OFFICER AND INSTALLATION FOR FUEL CANOPY GRAPHICS PACKAGE PRIOR TO ORDERING.

PRE-ENGINEERED, PREFABRICATED CANOPY SPECIFICATIONS

COLUMNS:	TUBULAR STEEL - A-500, GRADE B, PRIME FINISH.
STRUCTURAL STEEL:	ALL WIDE FLANGE W/BOLTED CONNECTIONS, A36 GRADE, PRIME FINISH.
DECKING:	5L-316 EMBOSSED WHITE, 20 GA. A-446, GRADE C MINIMUM.
FASCIA:	PRE-FINISHED, KYNAR METAL BACK LAMINATED. VERIFY COLOR WITH INSTALLATION PRIOR TO ORDERING. VERIFY COLOR W/ INSTALLATION.
FASCIA FRAMING:	1 1/2" X 1 1/2" X 18 GAUGE ANGLE.
FASTENERS:	SCREWS AND RIVETS (STAINLESS STEEL).
GUTTER:	EMBOSSED, 20 GA.
DRAINAGE:	PVC IN COLUMNS.
DESIGN:	GENERAL CONTRACTORS CANOPY SUPPLIER IS RESPONSIBLE TO PROVIDE ENGINEERING DESIGN OF FUEL CANOPY INCLUDING FOUNDATION DESIGN. SITE SPECIFIC PARAMETERS PER THE IBC, LATEST EDITION. CALCULATIONS SEALED BY A REGISTERED PROFESSIONAL ENGINEER (REGISTERED IN THE STATE WHERE CANOPY IS TO BE CONSTRUCTED). INCLUDING ENTIRE CANOPY STRUCTURE AND FOOTINGS. (CANOPY DESIGN MUST BE SUBMITTED FOR APPROVAL PRIOR TO FABRICATION).

CONTRACTOR TO CONTACT, PURCHASE AND INSTALL ALL AAFES CANOPY GRAPHICS FROM LSI INDUSTRIES (713) 329-4015.

AAFES Real Estate Directorate
AAFES (RE-C) P.O.BOX 660320 DALLAS, TX 75266-0320

KEY PLAN:

DATE	REVISION NO. & DESCRIPTION	BY

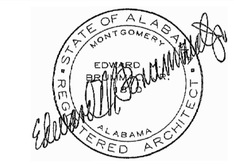

PARSONS WIBLE BRUMMAL ALKIRE / ARCHITECTS INC.
MONTGOMERY, ALABAMA

DESIGN BY: GEO
CHECKED BY: EMB

RECOMMENDED: DATE

APPROVED: DATE

ARMY & AIR FORCE EXCHANGE SERVICE
DEPARTMENTS OF THE ARMY & AIR FORCE

RE-C
REAL ESTATE DIRECTORATE

PROJECT:
TYNDALL AFB
CONSTRUCT SHOPPETTE/ FOOD/CLASS 6/GAS

TYNDALL AFB, FLORIDA

DRAWING TITLE:
FUEL CANOPY
PLAN & ELEVATIONS

DATE:	SCALE:	SHEET:
18 JAN. 2012	AS NOTED	T-11

DRAWING PROJECT NO.
0941-09-000003